I-97015

8-channel RTD Input Module

Features

- 8-channel RTD Input
- 3-wire RTD Lead Resistance Elimination
- High Resolution: 16-bit
- Individual Channel Configuration
- Open Wire Detection
- Overvoltage Protection
- ±4 kV ESD Protection
- 3000 VDC Intra-module Isolation

Introduction

The I-97015 is an 8-channel RTD input module for measuring temperature from RTD sensors. Each channel can be connected to different types of RTD sensor, and features automatic compensation for three-wire RTD so that accurate measurements can be made regardless of the length of the wires.

Open wire detection and overvoltage protection are also included, together with 4 kV ESD protection and 3000 VDC intra-module isolation.

System Specifications

LED Display	
Status	1 x Power and Communication 16 x High/Low Alarm Signals
Isolation	
Intra-module Isolation, Field-to-Logic	3000 VDC
EMS Protection	
ESD (IEC 61000-4-2)	±4 kV Contact for Each Terminal ±8 kV Air for Random Point
RS Immunity (IEC 61000-4-3)	3 V/m, 80 MHz ~ 1 GHz
COM Ports	
Ports	1 x RS-485
Baud Rate	1200 ~ 115200 bps
Data Format	N, 8, 1
Protocol	DCON
Power	
Consumption	0.6 W Max.
Mechanical	
Dimensions (W x L x H)	31 mm x 134 mm x 144 mm
Environment	
Operating Temperature	-25 ~ +75 °C
Storage Temperature	-40 ~ +85 °C
Humidity	10 ~ 90 % RH, Non-condensing

Applications

- Building Automation
- Factory Automation
- Machine Automation
- Remote Maintenance
- Remote Diagnosis
- Testing Equipment

I/O Specifications

Analog Input	
Channels	8
Sensor Type	Pt100, Pt1000, Ni100, Ni120, Cu50, Cu100, Cu1000
Resistance Measurement	3.2 kΩ
Resolution	16-bit
Accuracy	±0.05 % of FSR
Sampling Rate	12 Hz (Total)
Bandwidth	15.7 Hz
Input Impedance	> 1 MΩ
Common Mode Rejection	150 dB
Normal Mode Rejection	100 dB
Overvoltage Protection	±120 VDC
Individual Channel Configuration	Yes
Open Wire Detection	Yes
3-wire RTD Lead Resistance Elimination	Yes
Zero Drift	±0.5 μV/°C
Span Drift	±20 ppm/° C

RTD Type Settings (TT)

Type Code	RTD Type	Temperature Range
20	Platinum 100, α= 0.00385	-100 to +100°C
21	Platinum 100, α= 0.00385	0 to +100°C
22	Platinum 100, α= 0.00385	0 to +200°C
23	Platinum 100, α= 0.00385	0 to +600°C
24	Platinum 100, α= 0.003916	-100 to +100°C
25	Platinum 100, α= 0.003916	0 to +100°C
26	Platinum 100, α= 0.003916	0 to +200°C
27	Platinum 100, α= 0.003916	0 to +600°C
28	Nickel 120	-80 to +100°C
29	Nickel 120	0 to +100°C
2A	Platinum 1000, α= 0.00385	-200 to +600°C
2B	Cu 100 at 0°C, α= 0.00421	-20 to +150°C
2C	Cu 100 at 25°C, α= 0.00427	0 to +200°C
2D	Cu 1000 at 0°C, α= 0.00421	-20 to +150°C
2E	Platinum 100, α= 0.00385	-200 to +200°C
2F	Platinum 100, α= 0.003916	-200 to +200°C
80	Platinum 100, α= 0.00385	-200 to +600°C
81	Platinum 100, α= 0.003916	-200 to +600°C
82	Cu 50 at 0°C	-50 to +150°C
83	Nickel 100	-60 to +180°C

Pin Assignments

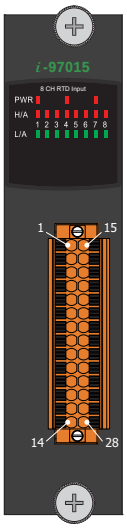

Pin Assignment	Terminal No.		Pin Assignment
A0	01	15	A4
B0	02	16	B4
/B0	03	17	/B4
A1	04	18	A5
B1	05	19	B5
/B1	06	20	/B5
A2	07	21	A6
B2	08	22	B6
/B2	09	23	/B6
A3	10	24	A7
B3	11	25	B7
/B3	12	26	/B7
-	13	27	-
-	14	28	-

Wire Connections

3-wire RTD Connection	2-wire RTD Connection
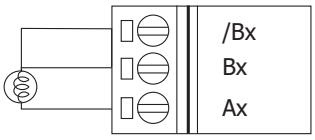	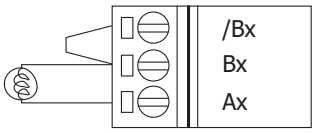

Dimensions (Units: mm)

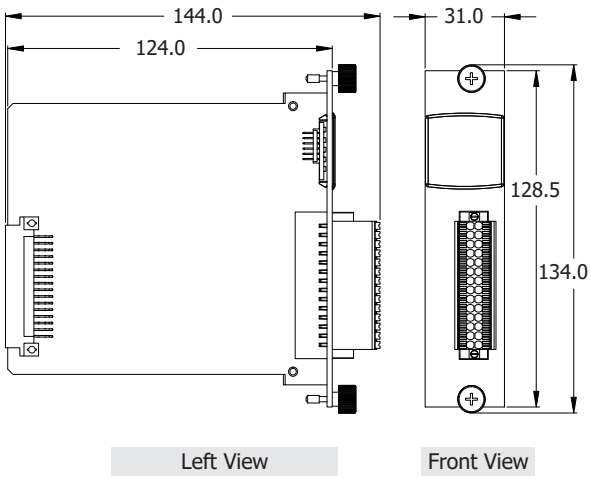

Internal I/O Structure

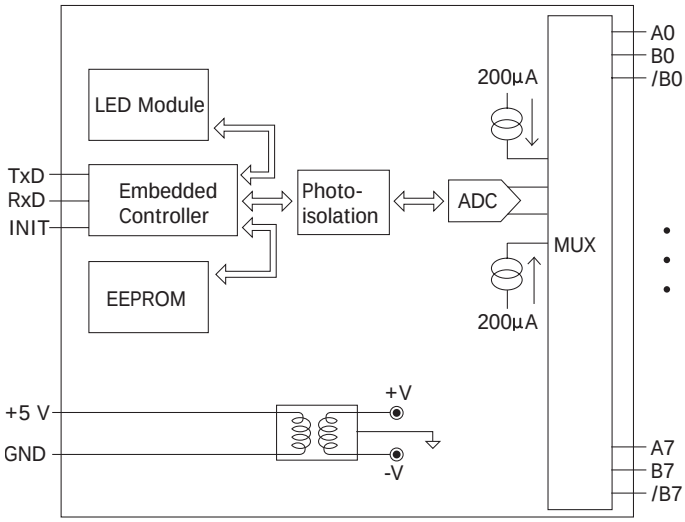

Accessories

	SG-770 CR	7-channel Differential or 14-channel Single-ended Surge Protector (RoHS)

Ordering Information

I-97015 CR	8-channel RTD Input Module (RoHS)