NOARK

Catalog

Air Circuit Breakers and Non-Automatic Switches

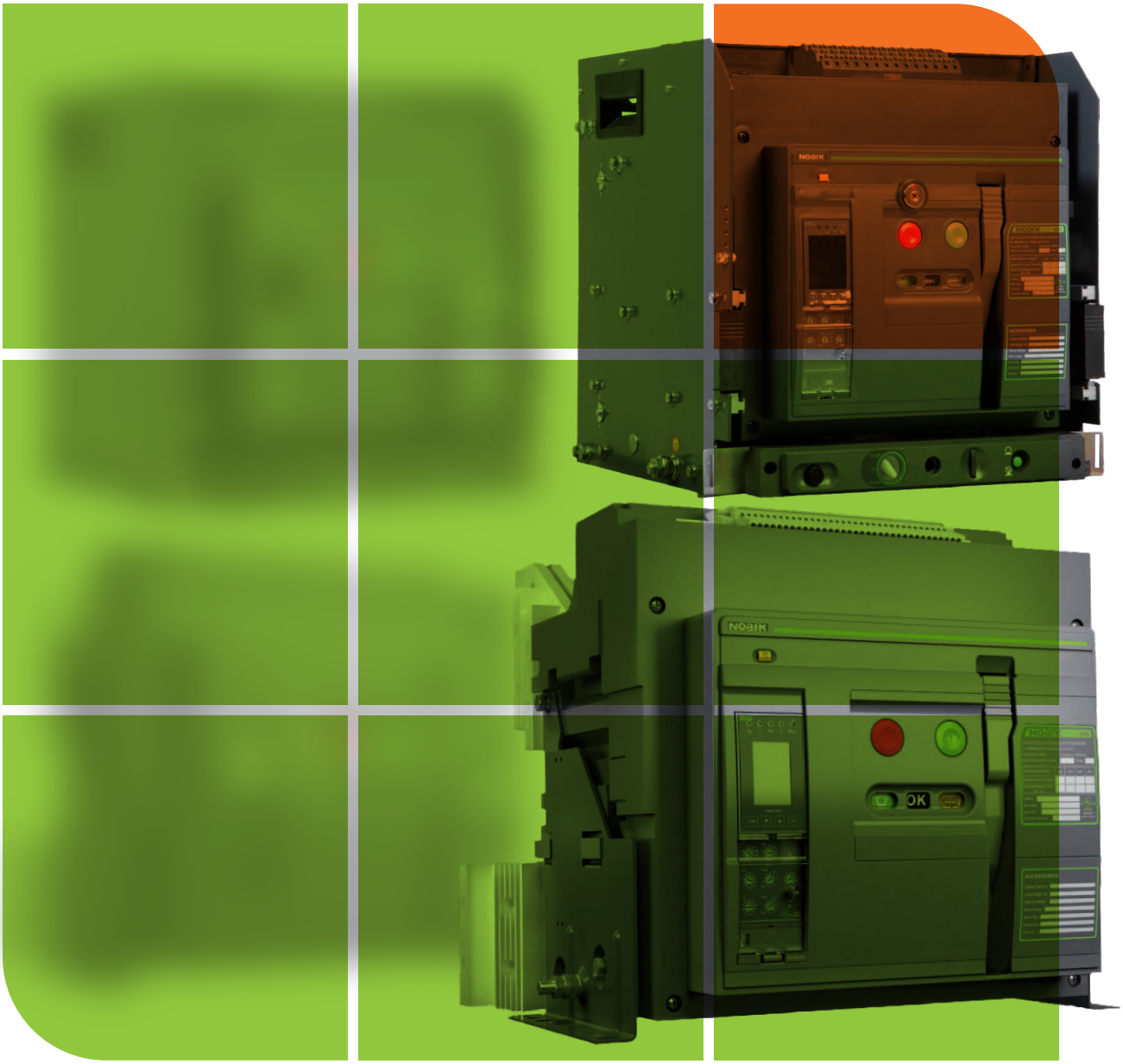

Excellent Products. Exceptional Value.

na.noark-electric.com

NOARK

ABOUT US

NOARK Electric is a global manufacturer of low-voltage electrical components for industrial applications. We specialize in motor controls and circuit protection for original equipment manufacturers. Our mission is to provide customers with the highest quality products at an exceptional value and back them with world-class service and support. Every NOARK product is tested and certified to the highest industry standards and covered by our exclusive five-year limited warranty.

Research and Development

The entire portfolio of high-quality NOARK products is designed for manufacturing and assembly (DFMA). Each component is developed in-house by our engineering team to meet the strictest standards and performance requirements. This dedication to excellence has led to the development of patented technology found in many of our products.

World-class Manufacturing

After being thoroughly tested, approved and certified – each NOARK product is sent into production at our state-of-the-art manufacturing facilities. This allows us to maintain strict quality control standards throughout the manufacturing process. In addition, NOARK Electric adheres to a policy of environmental protection and sustainability.

North American Distribution

NOARK's distribution centers are located in Pomona, CA and Kitchener, ON, with the aim of ensuring prompt and reliable deliveries of the entire product range to our customers all over North America. Our supply chain team works closely with our factories and logistics partners to ensure the availability of our products on the North American market and provide logistics services on the level which our customers expect. NOARK Electric is a subsidiary of the largest electrical manufacturing group in Asia with over 50 thousand employees and sales revenue of $22 billion USD. We have corporate facilities in Los Angeles, Shanghai and Prague to service the requirements of individual markets and countries.

140+	300+	20	22	3	10,000,000+	50,000+
Countries	Overseas Distributors	Overseas Subsidiaries	Logistics Centers	R & D Centers	Sq.Ft. Manufacturing Space	Employees Worldwide

TABLE OF CONTENTS

A. A25 Series Air Circuit Breakers

Product Overview 5
Product Label 6
Product Selection Guide 7
A25/ASD25 Products 8
Technical Specifications 10
Environmental Conditions 11
Dimensions 12

B. A25 Series Trip Unit

Product Overview 20
Product Label 21
Product Selection Guide 22
Trip Unit Products 23
Technical Specifications 24
Trip Curves 28

C. A25 Series Accessories

Electrical 29
Mechanical 33

D. A32 Series Air Circuit Breakers

Product Overview 35
Product Label 36
Product Selection Guide 37
A32/ASD32 Products 38
Technical Specifications 40
Environmental Conditions 41
Dimensions 42

E. A40 Series Air Circuit Breakers

Product Overview 52
Product Label 53
Product Selection Guide 54
A40/ASD40 Products 55
Technical Specifications 56
Environmental Conditions 57
Dimensions 58

TABLE OF CONTENTS

F. A32/A40 Series Trip Unit

Product Overview 59
Product Label 60
Product Selection Guide 61
Trip Unit Products 62
Technical Specifications 63
Trip Curves 67

G. A32/A40 Series Accessories

Electrical 68
Mechanical 73

H. Appendix

Appendix I - A25 Series Products Selection Guide 75
Appendix II - A32 Series Products Selection Guide 78
Appendix III - A40 Series Products Selection Guide 81

A25 Series Air Circuit Breakers

Product Overview

NOARK Electric is proud to offer its A25 family of Air Circuit Breakers, Non-Automatic Disconnect Switches, and accessories. Our A25 products are optimized for OEMs and are manufactured under world-class quality systems in our ISO accredited factories. Like all NOARK products, these breakers are designed to deliver high quality, superior performance and outstanding value.

A25 Air Circuit Breakers are available up to 2500A and are capable of IC ratings up to 85kA at 847 Volts. UL Listed and CSA Certified, the A25 family of products provide design standardization for OEMs no matter where they do business. A25 breakers offer a broad range of available trip units, accessories and communications options. They are the ideal OEM solution for low voltage switchgear and customized power distribution assemblies used in Data Centers, Standby Power, Industrial, Healthcare and Commercial applications.

Ratings

- 600A through 2500A
- IC ratings up to 85kA at 847V
- Short-Time Withstand, 85kA at 847V
- 50 or 60 Hz operation
- 3-pole and 4-pole designs
- 10,000 Operations, before maintenance (Mechanical)
- 6000 Operations, before maintenance (Electrical)
- Meets ANSI C37.13, C37.16, C37.17 and C37.50
- 100% rated for continuous operation at maximum current rating.

Protection & Control Options

- LI, LSI or LSIG Protection
- Standard LED display
- Color LCD display available
- Optional multi-metering trip unit with total harmonic distortion analysis and waveform capture
- Stored energy operating mechanism
- AC and DC rated motor operator, shunt trip and undervoltage release accessories
- Arc Flash Reduction Maintenance Mode
- Zone Selective Interlocking
- RS-485 Modbus Communication available

Approvals

- UL 1066, Low-Voltage AC and DC Air Circuit Breakers
- CSA C22.2 NO.268
- ANSI C37.13 Low Voltage Air Circuit Breakers
- ANSI C37.16 Low Voltage Air Circuit Breakers Ratings, Related Requirements and Applications
- ANSI C37.17 – IEEE Standard for Trip Systems
- ANSI C37.50 – Low Voltage AC Air Circuit Breakers,Test Procedure

Design Features

- UL/CSA field-installable accessories
- Rear horizontal or vertical connections
- Through-the-door design
- 3-pole and 4-pole designs
- OEM optimized Cassette
- Phase barriers (optional)
- Available as Disconnect Switch (ASD25)

© 2025 NOARK Electric

A25 Series Air Circuit Breakers

Product Label

An extensive range of accessories are available for the A25 power (air) circuit breakers. Each accessory can be installed as an independent unit, making thanks to the modular architecture of the A25. This makes installation and maintenance fast and simple. for technicians.

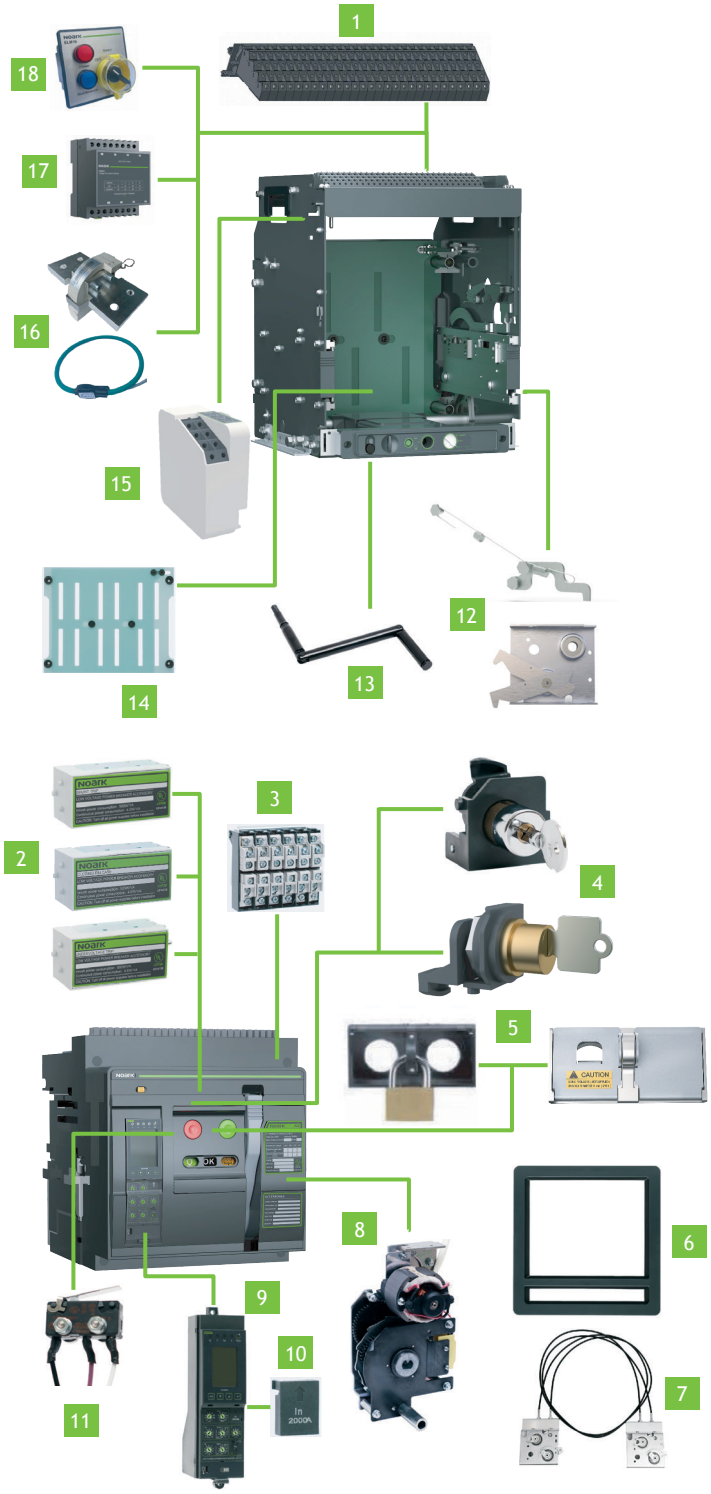

1	Terminal Block: TBDN
2	Under Voltage Release: UVT series
	Shunt Trip Release: SHT series
	Closing Release: XF series
3	Auxiliary Contact: AX Series
4	OFF Position Key-Lock: KLK series
	Kirk Key Interlock Kit: KKC11N
5	Pushbutton Lock Device:
	VBP12N (Plastic) and VBP11NM (Metal)
6	Door Frames - CDP11N and DDP11N
7	Mechanical Interlocks With Cables - IPA series
8	Motor Operator Device: MD series
9	Trip Unit: SU series
10	Rating Plug: IN series
11	Ready To Close Contact: PF11N series
12	Door Interlocks: VPEC11NP and VPEC11NS
13	Rotary Handle
14	Safety Shutter
15	Position Indicator: EF11N
16	External Current Transformer For Neutral:
	NCT11N & RCT-1800-COIL 11
17	Voltage Conversion Module: VCM10
18	Energy-Limiting Maintenance Switch: ELM10

© 2025 NOARK Electric

A25 Series Air Circuit Breakers

Product Selection Guide

A25/ASD25 Product Selection Guide

A	25	H	3	F	H	800
NOARK UL 1066 Air Circuit Breakers	Protection Type	Interrupting/Short time withstanding Rating[3]	Poles	Mounting Type	Terminal Connection	Rated Current
A: Circuit Breaker	25: 2500A	Q: 65kA @ 600Vac	3: 3-pole	F: Fixed	H: Horizontal[1]	600: 600A
ASD: Non-Auto Switch		R: 75kA @ 600Vac	4: 4-pole	D: Drawout	V: Vertical	800: 800A
		H: 85kA @ 600Vac				1200: 1200A
						1600: 1600A
						2000: 2000A
						2500: 2500A[2]

Cassette Product Selection Guide

CAS11	N	3	H	1600
Cassette	Device Category	Poles	Terminal Connection	Rated Current
CAS11	N: UL	3: 3-pole	H: Horizontal	1200: 600A, 800A, 1200A
		4: 4-pole	V: Vertical	2000: 1600A, 2000A

1. Horizontal terminal connection only available up to 2000A frame.
2. 2500A Frame is only available in in fixed type mounting and vertical terminals.
3. Interrupting/Short time withstanding ratings vary depending on voltage. Refer to specifications on page 8 for ratings.

Note:

An assembled breaker unit must include the ACB breaker Frame and Trip unit.

For full list of optional accessories, see Page 29-34.

For PCB Selection Guide, see Appendix I on Page 75.

© 2025 NOARK Electric

A25 Series Air Circuit Breakers

A25/ASD25 Products

Product Family	Number of Poles	Frame Type	Connection Type	Rated Current (A)	Q-Interrupting 65kA @ 800Vac		R-Interrupting 75kA @ 800Vac		H-Interrupting 85kA @ 800Vac	
					Catalog Number	Part Number	Catalog Number	Part Number	Catalog Number	Part Number
A25	3	Fixed	Horizontal	600	A25Q3FH600	1800577	A25R3FH600	1800619	A25H3FH600	1800661
				800	A25Q3FH800	1800578	A25R3FH800	1800620	A25H3FH800	1800662
				1200	A25Q3FH1200	1800579	A25R3FH1200	1800621	A25H3FH1200	1800663
				1600	A25Q3FH1600	1800580	A25R3FH1600	1800622	A25H3FH1600	1800664
				2000	A25Q3FH2000	1800581	A25R3FH2000	1800623	A25H3FH2000	1800665
			Vertical	600	A25Q3FV600	1800582	A25R3FV600	1800624	A25H3FV600	1800666
				800	A25Q3FV800	1800583	A25R3FV800	1800625	A25H3FV800	1800667
				1200	A25Q3FV1200	1800584	A25R3FV1200	1800626	A25H3FV1200	1800668
				1600	A25Q3FV1600	1800585	A25R3FV1600	1800627	A25H3FV1600	1800669
				2000	A25Q3FV2000	1800586	A25R3FV2000	1800628	A25H3FV2000	1800670
				2500	A25Q3FV2500	1800587	A25R3FV2500	1800629	A25H3FV2500	1800671
		Drrawout	Horizontal	600	A25Q3DH600	1800599	A25R3DH600	1800641	A25H3DH600	1800683
				800	A25Q3DH800	1800600	A25R3DH800	1800642	A25H3DH800	1800684
				1200	A25Q3DH1200	1800601	A25R3DH1200	1800643	A25H3DH1200	1800685
				1600	A25Q3DH1600	1800602	A25R3DH1600	1800644	A25H3DH1600	1800686
				2000	A25Q3DH2000	1800603	A25R3DH2000	1800645	A25H3DH2000	1800687
			Vertical	600	A25Q3DV600	1800604	A25R3DV600	1800646	A25H3DV600	1800688
				800	A25Q3DV800	1800605	A25R3DV800	1800647	A25H3DV800	1800689
				1200	A25Q3DV1200	1800606	A25R3DV1200	1800648	A25H3DV1200	1800690
				1600	A25Q3DV1600	1800607	A25R3DV1600	1800649	A25H3DV1600	1800691
				2000	A25Q3DV2000	1800608	A25R3DV2000	1800650	A25H3DV2000	1800692

Product Family	Number of Poles	Frame Type	Connection Type	Rated Current (A)	Q-Withstand rating 65kA @ 800Vac		R-Withstand rating 75kA @ 800Vac		H-Withstand rating 85kA @ 800Vac	
					Catalog Number	Part Number	Catalog Number	Part Number	Catalog Number	Part Number
ASD25 Disconnect Switch	3	Fixed	Horizontal	600	ASD25Q3FH600	1800703	ASD25R3FH600	1800745	ASD25H3FH600	1800787
				800	ASD25Q3FH800	1800704	ASD25R3FH800	1800746	ASD25H3FH800	1800788
				1200	ASD25Q3FH1200	1800705	ASD25R3FH1200	1800747	ASD25H3FH1200	1800789
				1600	ASD25Q3FH1600	1800706	ASD25R3FH1600	1800748	ASD25H3FH1600	1800790
				2000	ASD25Q3FH2000	1800707	ASD25R3FH2000	1800749	ASD25H3FH2000	1800791
			Vertical	600	ASD25Q3FV600	1800708	ASD25R3FV600	1800750	ASD25H3FV600	1800792
				800	ASD25Q3FV800	1800709	ASD25R3FV800	1800751	ASD25H3FV800	1800793
				1200	ASD25Q3FV1200	1800710	ASD25R3FV1200	1800752	ASD25H3FV1200	1800794
				1600	ASD25Q3FV1600	1800711	ASD25R3FV1600	1800753	ASD25H3FV1600	1800795
				2000	ASD25Q3FV2000	1800712	ASD25R3FV2000	1800754	ASD25H3FV2000	1800796
				2500	ASD25Q3FV2500	1800713	ASD25R3FV2500	1800755	ASD25H3FV2500	1800797
		Drrawout	Horizontal	600	ASD25Q3DH600	1800725	ASD25R3DH600	1800767	ASD25H3DH600	1800809
				800	ASD25Q3DH800	1800726	ASD25R3DH800	1800768	ASD25H3DH800	1800810
				1200	ASD25Q3DH1200	1800727	ASD25R3DH1200	1800769	ASD25H3DH1200	1800811
				1600	ASD25Q3DH1600	1800728	ASD25R3DH1600	1800770	ASD25H3DH1600	1800812
				2000	ASD25Q3DH2000	1800729	ASD25R3DH2000	1800771	ASD25H3DH2000	1800813
			Vertical	600	ASD25Q3DV600	1800730	ASD25R3DV600	1800772	ASD25H3DV600	1800814
				800	ASD25Q3DV800	1800731	ASD25R3DV800	1800773	ASD25H3DV800	1800815
				1200	ASD25Q3DV1200	1800732	ASD25R3DV1200	1800774	ASD25H3DV1200	1800816
				1600	ASD25Q3DV1600	1800733	ASD25R3DV1600	1800775	ASD25H3DV1600	1800817
				2000	ASD25Q3DV2000	1800734	ASD25R3DV2000	1800776	ASD25H3DV2000	1800818

© 2025 NOARK Electric

A25 Series Air Circuit Breakers

A25/ASD25 Products

Product Family	Number of Poles	Connection Type	Rated Current (A)	Catalog Number	Part Number
A25 Drawout Cassette	3	Horizontal	600/800/1200	CAS11N3H1200	1800829
			1600/2000	CAS11N3H2000	1800830
		Vertical	600/800/1200	CAS11N3V1200	1800831
			1600/2000	CAS11N3V2000	1800832

Note: Drawout Frame Selection includes the Cassette. Renewal part only.

© 2025 NOARK Electric

A25 Series Air Circuit Breakers

Technical Specifications

A25 Series Air Circuit Breakers			A25Q	A25R	A25H
Poles			3-pole | 4-pole		
Mounting Type			Fixed | Drawout		
Rated current (A)		Fixed	600 | 800 | 1200 | 1600 | 2000 | 2500		
		Drawout	600 | 800 | 1200 | 1600 | 2000		
Rated Maximum Voltage (Vac)			254 | 508 | 635 | 847		
Frequency (Hz)			50 | 60		
Interrupting rating at rated maximum voltage (kA)		254Vac	65	85	100
		508Vac	65	85	100
		635Vac	65	75	85
		847Vac	65	75	85
Short time withstand current (kA)		254Vac	65	75	85
		508Vac	65	75	85
		635Vac	65	75	85
		847Vac	65	75	85
Operating time (ms)		Open	≤30		
		Close	≤70		
Life cycle (time)	Mechanical	Without maintenance	10000		
	Electrical	Without maintenance 635Vac	6000		
	Electrical	Without maintenance 847Vac	3000		

A25 Series Air Circuit Breakers			ASD25Q	ASD25R	ASD25H
Poles			3-pole | 4-pole		
Mounting Type			Fixed | Drawout		
Rated current (A)		Fixed	600 | 800 | 1200 | 1600 | 2000 | 2500		
		Drawout	600 | 800 | 1200 | 1600 | 2000		
Rated Maximum Voltage (Vac)			254 | 508 | 635 | 847		
Frequency (Hz)			50 | 60		
Short time withstand current (kA)		254Vac	65	75	85
		508Vac	65	75	85
		635Vac	65	75	85
		847Vac	65	75	85
Operating time (ms)		Open	≤30		
		Close	≤70		
Life cycle (time)	Mechanical	Without maintenance	10000		
	Electrical	Without maintenance 635Vac	6000		
	Electrical	Without maintenance 847Vac	3000		

Overall Dimensions			Height	Width	Depth
H×W×D (in/mm)	Drawout	3-pole	18.11 (460)	14.06 (357)	16.93 (430)
		4-pole	18.113 (460)	17.80 (452)	16.93 (430)
	Fixed	3-pole	14.49 (368)	12.52 (318)	12.05 (306)
		4-pole	14.49 (368)	16.26 (413)	12.05 (306)
Enclosure dimensions H×W×D (in/mm)	Drawout	3-pole	20.87 (530) Ventilation Area Top : 0mm² Bottom : 0mm²	17.72 (450)	18.31 (465)
		4-pole	20.87 (530) Ventilation Area Top : 0mm² Bottom : 0mm²	21.46 (545)	18.31 (465)

Weight lb (kg)		Fixed	Drawout
Air Circuit Breakers - A25	3-pole 600A~1200A	104 (47)	194 (88)
	3-pole 1600A~2000A	106 (48)	200 (91)
	3-pole 2500A	119 (54)	/
Non-Automatic Switches - ASD25	3-pole 600A~1200A	97 (44)	187 (85)
	3-pole 1600A~2000A	101 (46)	194 (88)
	3-pole 2500A	112 (51)	/

© 2025 NOARK Electric

A25 Series Air Circuit Breakers

Environmental Conditions

Ambient Temperature

A Series Air Circuit Breakers can operate in the following environmental conditions:
With M Trip Unit: -40°C ~ 70°C;
With A/H Trip Unit: -20°C ~ 70°C;
A Series Air Circuit Breakers can operate at higher temperatures than the reference temperature 40°C, in this case, the derating coefficients shown in the table must be applied.

Model	Rated Current (A)	Temperature (°C)						
		< 40	45	50	55	60	65	70
A25/ASD25	600	100%	100%	100%	100%	100%	100%	100%
	800	100%	100%	100%	100%	100%	100%	100%
	1200	100%	100%	100%	100%	100%	95%	90%
	1600	100%	100%	100%	95%	92%	88%	85%
	2000	100%	100%	100%	95%	90%	85%	80%
	2500	100%	95%	90%	80%	75%	70%	65%

Altitude

A Series Air Circuit Breakers do not undergo changes in rated performance up to 2000m. Beyond this altitude, the derating coefficients shown in the table must be applied.

	Altitude (m)			
	< 2000	2600	3900	4900
Rated Voltage (V)	1×Ue	0.95×Ue	0.8×Ue	0.7×Ue
Rated Current (A)	1×In	0.99×In	0.96×In	0.94×In

Humidity

The relative humidity does not exceed 85% at 40°C, the monthly average maximum of relative humidity in the wettest month does not exceed 90%.
The effect of surface condensation caused by temperature changes on product performance should be taken into consideration.

© 2025 NOARK Electric

A25 Series Air Circuit Breakers

Dimensions

Fixed type

A25-600/800A/1200A-3P
Horizontal connection

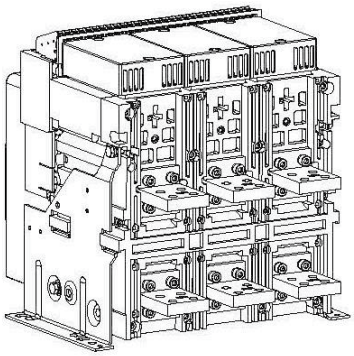

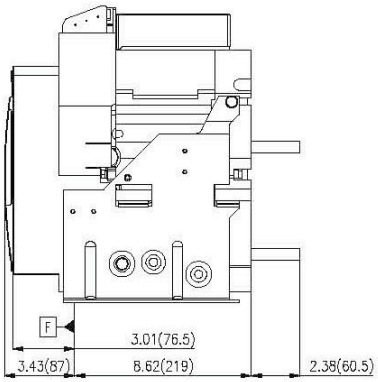

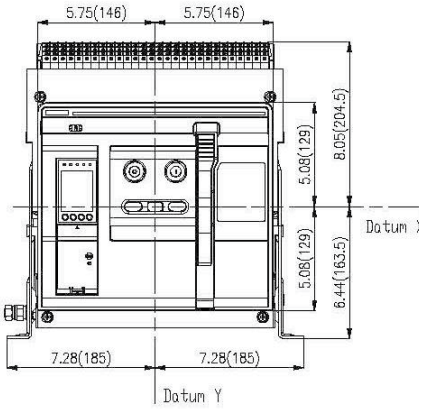

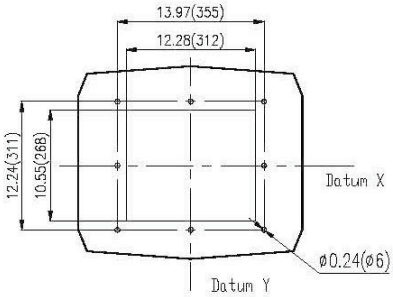

panel perforating size

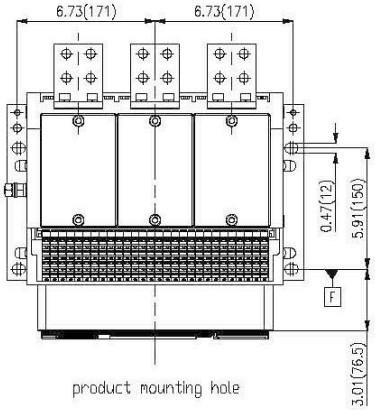

product mounting hole

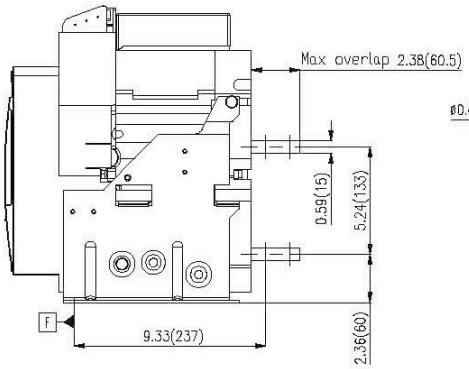

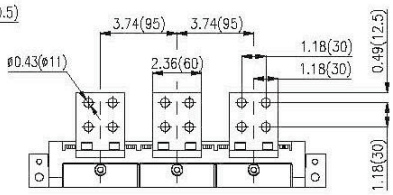

© 2025 NOARK Electric

A25 Series Air Circuit Breakers

Dimensions

Fixed type

A25-1600A/2000A-3P
Vertical connection

in (mm)

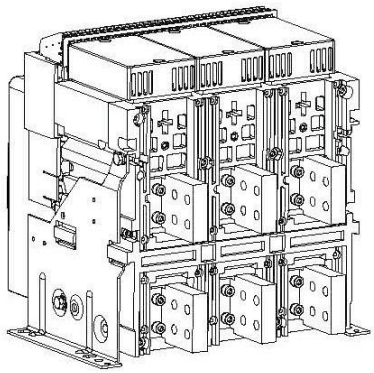

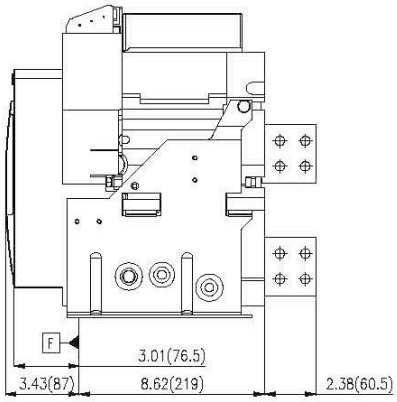

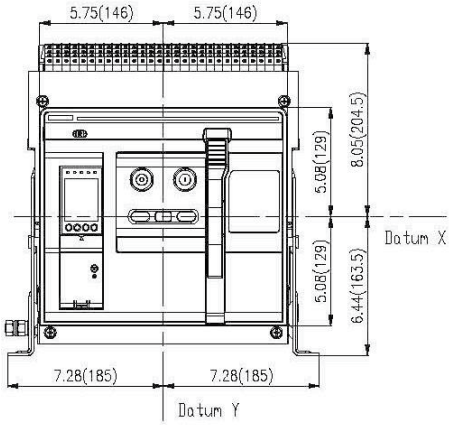

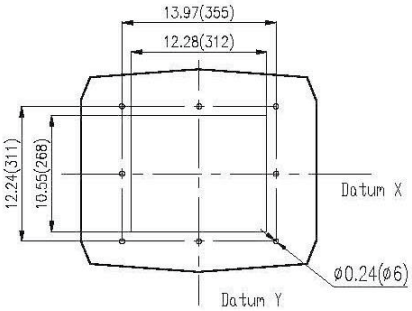

panel perforating size

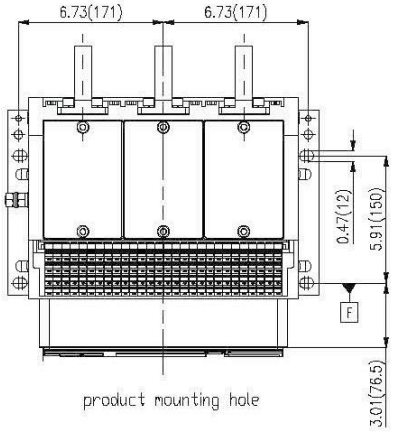

product mounting hole

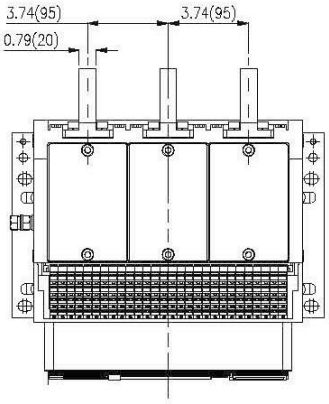

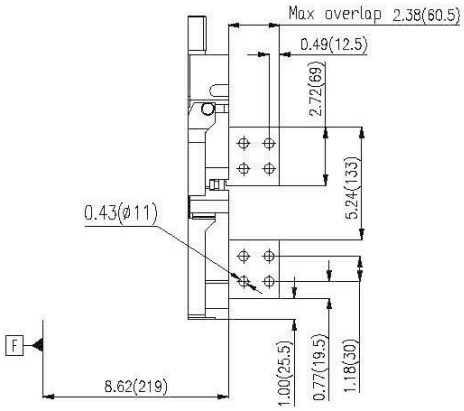

© 2025 NOARK Electric

A25 Series Air Circuit Breakers

Dimensions

Fixed type

A25-1600A/2000A-3P
Horizontal connection

in (mm)

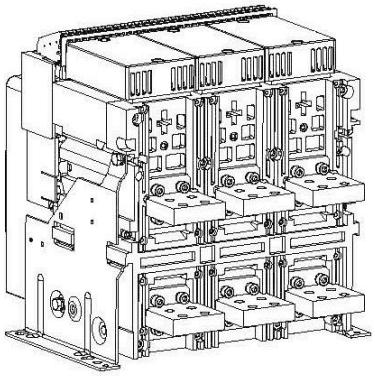

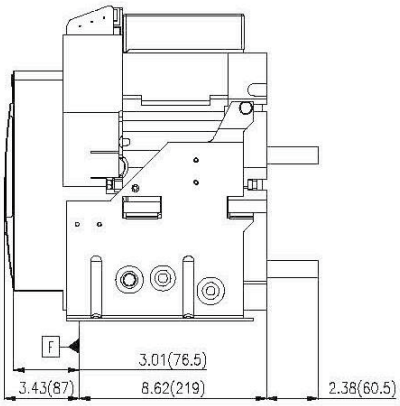

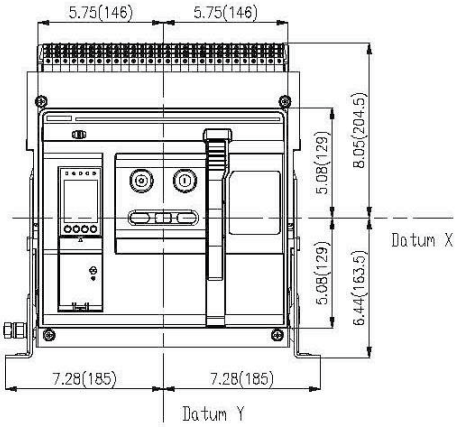

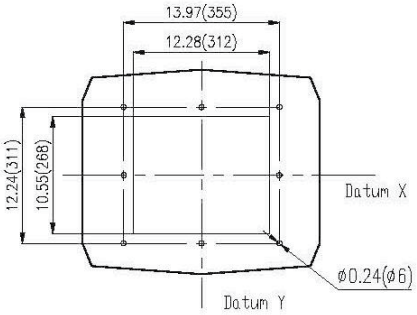

panel perforating size

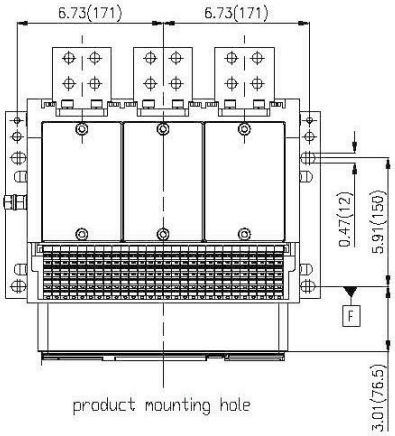

product mounting hole

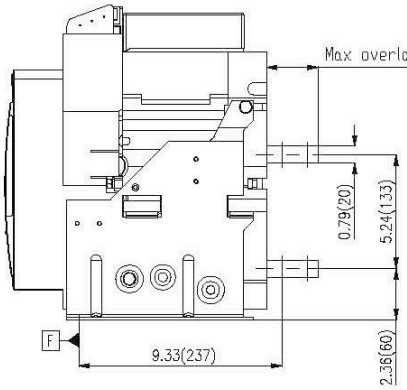

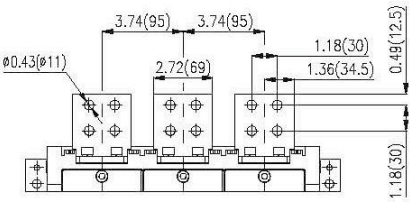

© 2025 NOARK Electric

A25 Series Air Circuit Breakers

Dimensions

Fixed type

A25-2500A-3P
Vertical connection

in (mm)

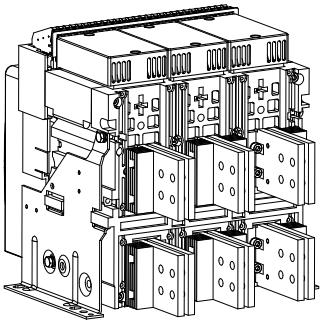

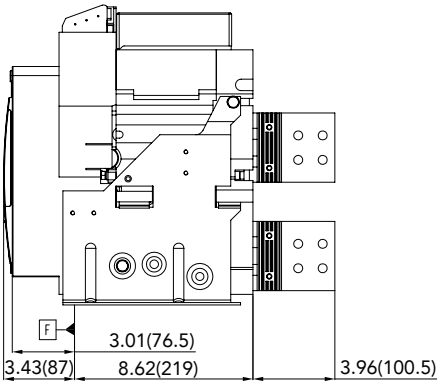

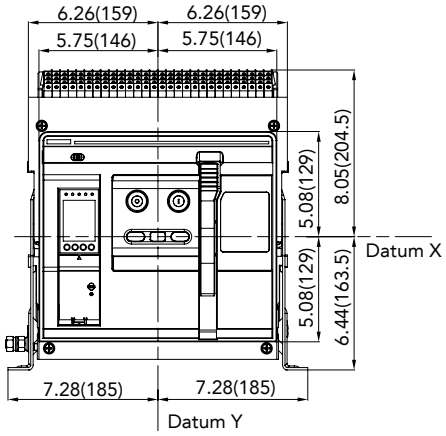

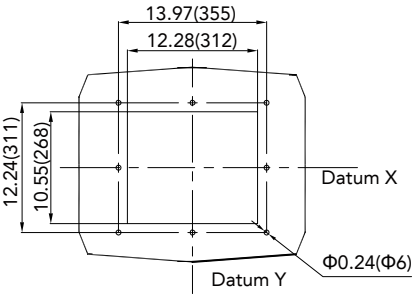

Panel perforating size

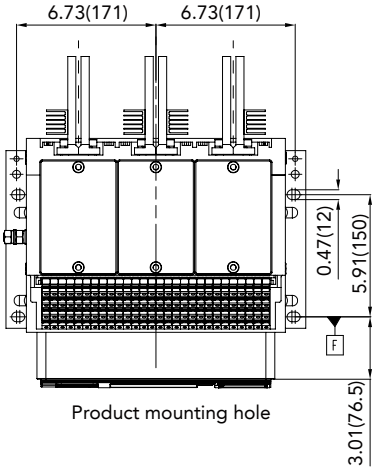

Product mounting hole

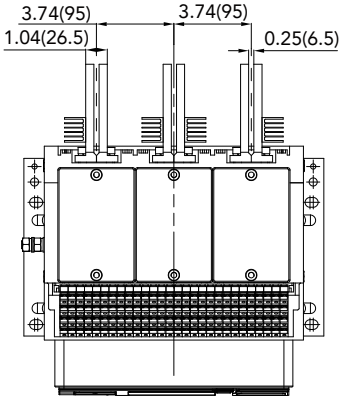

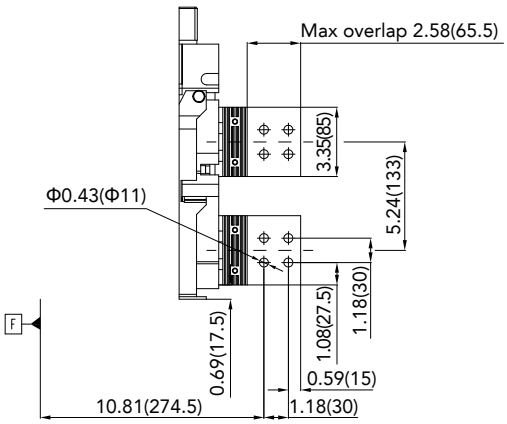

© 2025 NOARK Electric

A25 Series Air Circuit Breakers

Dimensions

Draw out type

A25-600/800/1200A-3P
Vertical connection

in (mm)

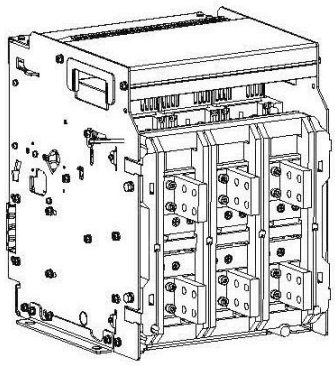

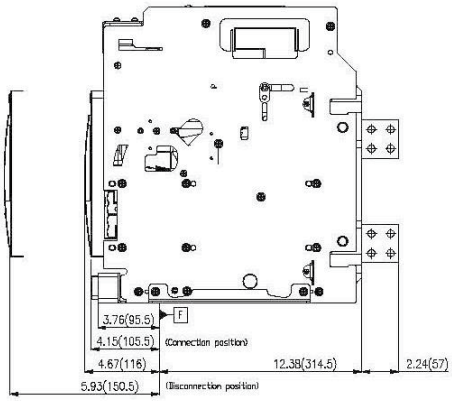

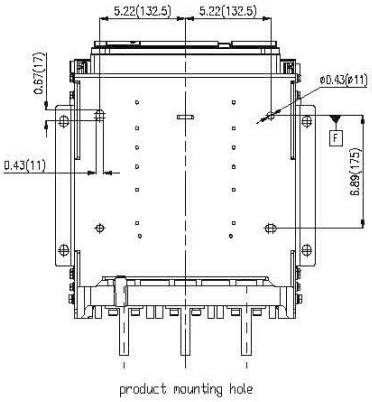

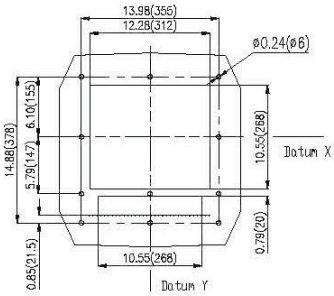

panel perforating size

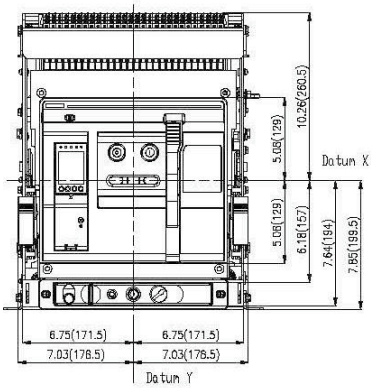

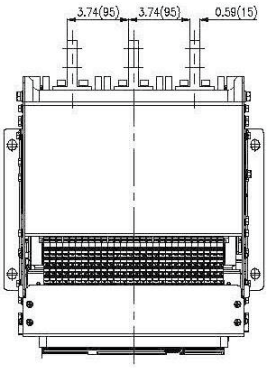

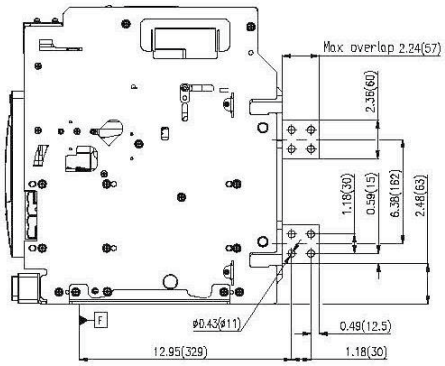

© 2025 NOARK Electric

A25 Series Air Circuit Breakers

Dimensions

Draw out type

A25-600/800/1200A-3P
Horizontal connection

in (mm)

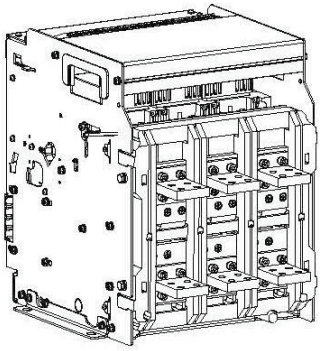

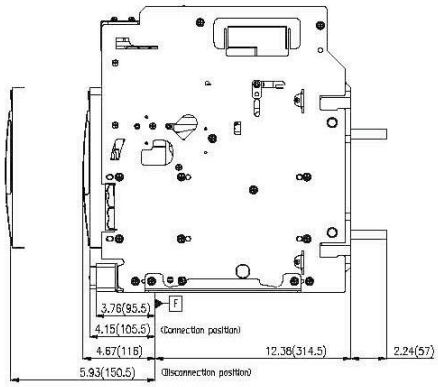

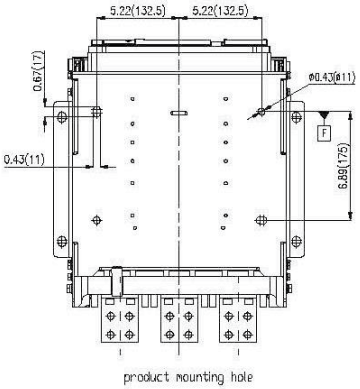

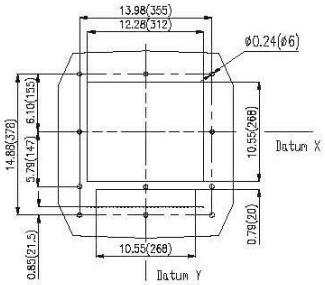

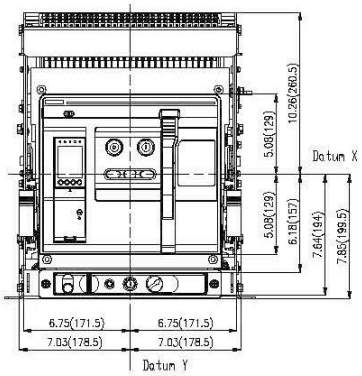

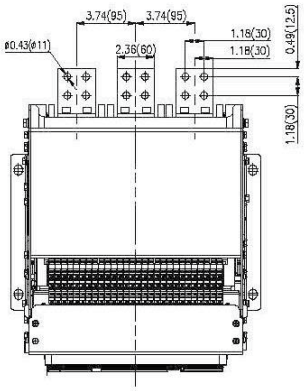

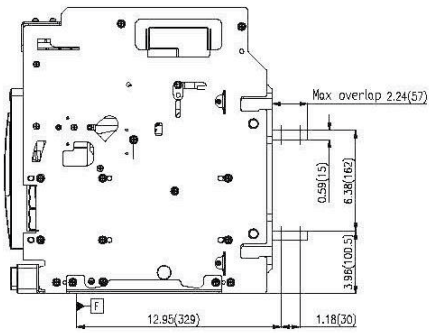

© 2025 NOARK Electric

A25 Series Air Circuit Breakers

Dimensions

Draw out type

A25-1600/2000A-3P
Vertical connection

in (mm)

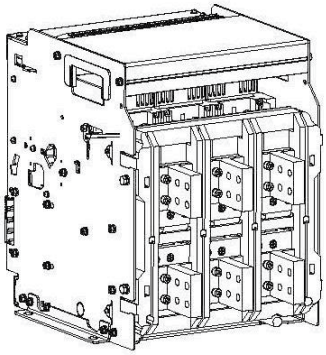

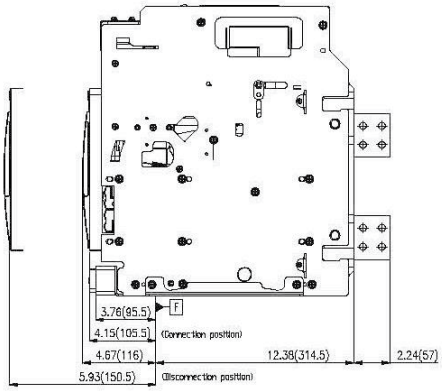

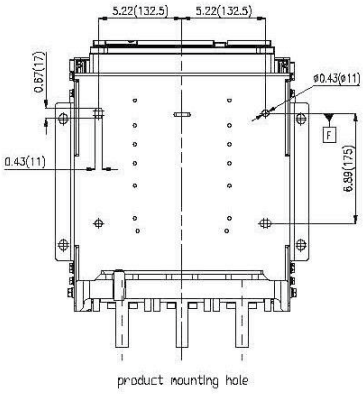

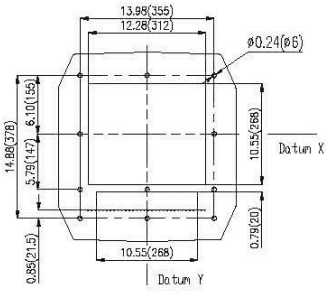

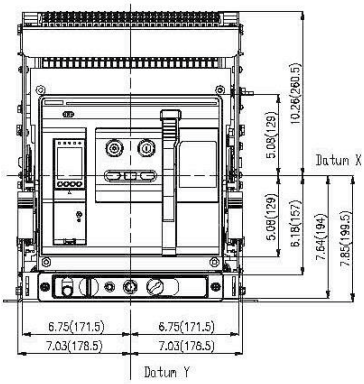

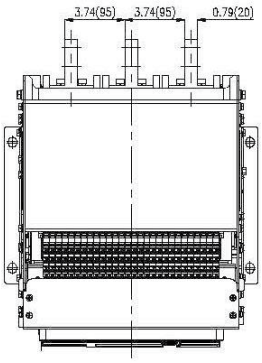

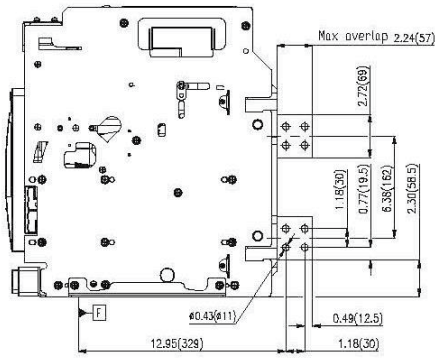

© 2025 NOARK Electric

A25 Series Air Circuit Breakers

Dimensions

Draw out type

A25-1600/2000A-3P
Horizontal connection

in (mm)

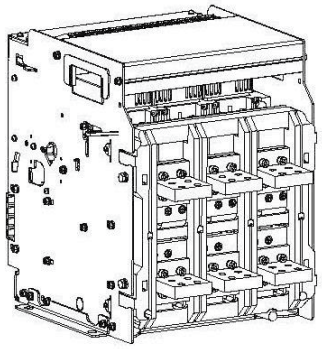

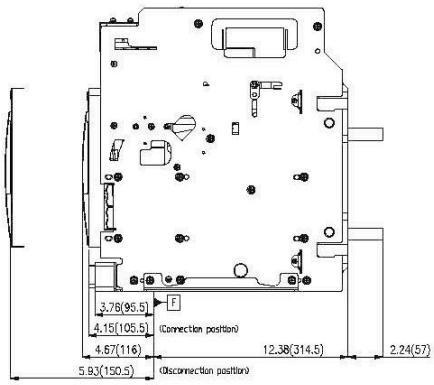

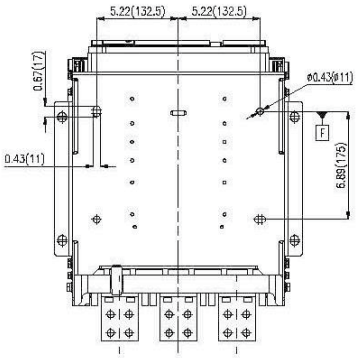

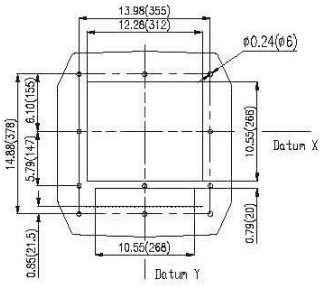

panel perforating size

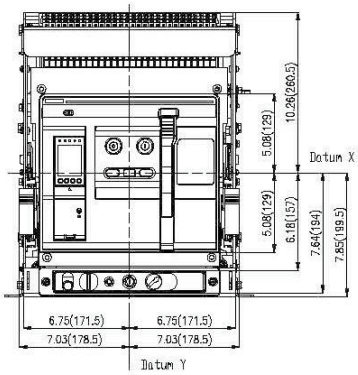

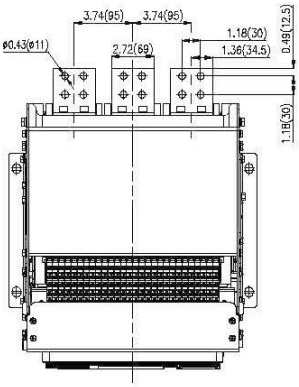

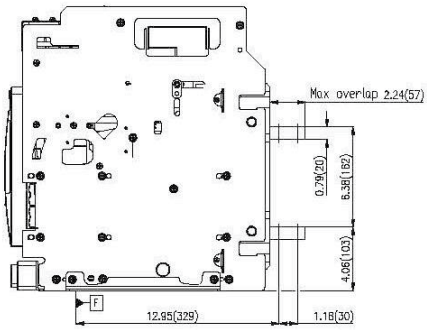

© 2025 NOARK Electric

A25 Series Trip Unit

Product Overview

A25 Trip Units offer the advanced electronic protection and control functionality required for power distribution and feeder protection in today's increasingly complex power systems. The A25 trip unit's purpose-built electronic circuits and microprocessors measure the breaker's electrical values against pre-set or user-selected parameters for overload, short circuit, current unbalance, over/under voltage and over/under frequency. When required, a residual ground current transformer provides sensing for ground fault protection.

In addition to the standard LI, LSI and LSIG circuit protection functions, A25 trip units can offer advanced Digital Metering, Arc Flash Reduction Mode and Zone Selective Interlocking. Communications capability is available, ensuring that the trip unit's metered values and status can be transmitted to any required monitoring or control networks.

A25 Trip Units consist of three models, each providing different levels of control, display, diagnostics, and communications options, meeting the requirements of a wide range of end-use applications. Each model can be ordered in one of three protection configurations.

Models:

- Model M–LED display
- Model A–Color LCD display with a 3-phase ammeter
- Model H–Color LCD display with multi-metering and total harmonic distortion waveform capture

Protection Configurations:

- LI: Long Time-delay Overload, Instantaneous Short Circuit.
- LSI: Long Time-delay Overload, Short Time-delay Short Circuit, Instantaneous Short Circuit
- LSIG: Long Time-delay Overload, Short Time-delay Short Circuit, Instantaneous Short Circuit, Equipment Ground Fault

Features:

- Microprocessor based true rms sensing
- Discrete rotary trip setting dials
- Cause of trip LEDs
- Unit status LED
- Making / breaking protection (MCR)
- Ready-To-Close Indicator
- Available zone selective interlocking
- Available arc flash reduction mode
- Available RS-485 communications
- USB port for power & communication
- Service short circuit protection (HSISC)

© 2025 NOARK Electric

A25 Series Trip Unit

Product Label

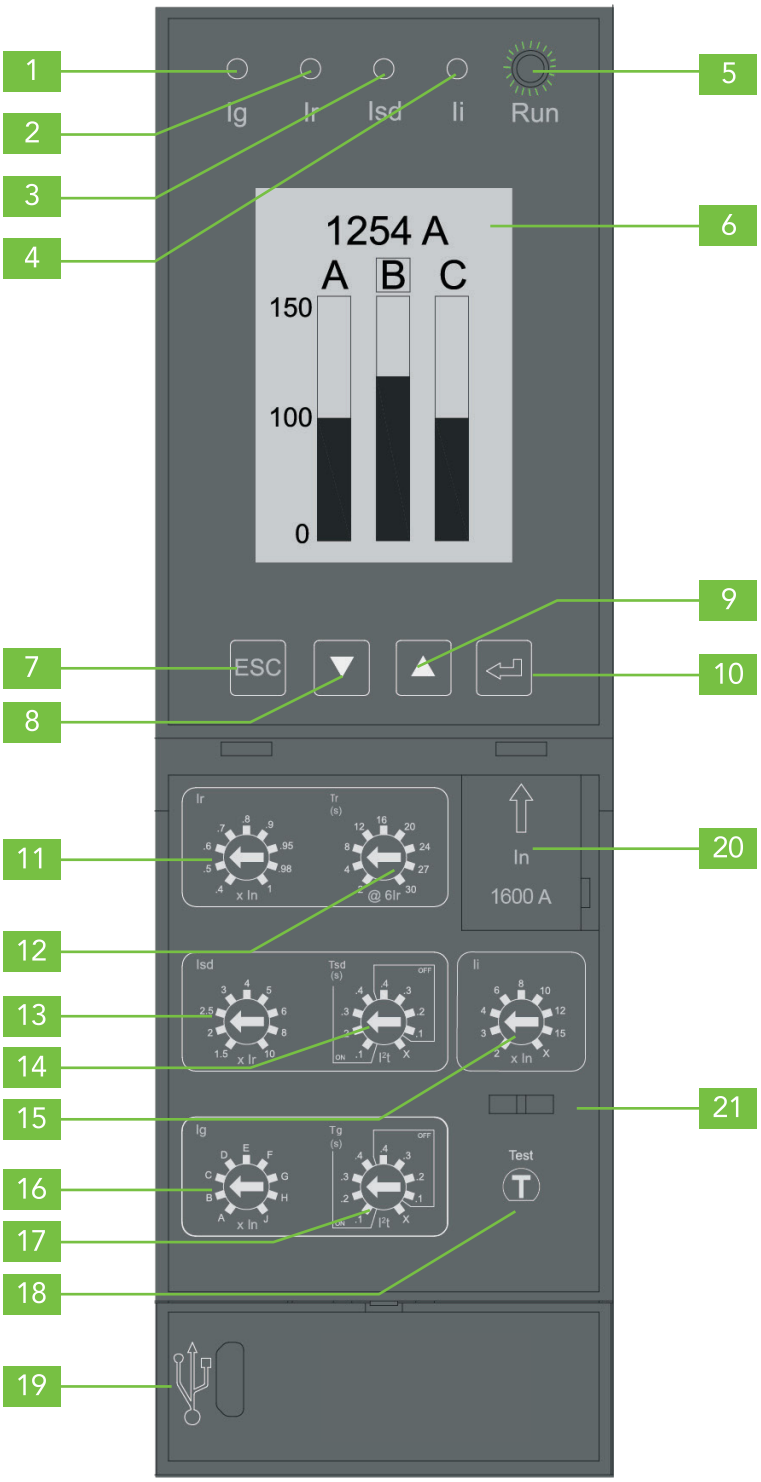

Indicators

1	LED cause of trip indicator (Ig)
2	LED cause of trip indicator (Ir)
3	LED cause of trip indicator (Isd)
4	LED cause of trip indicator (Ii)
5	Running LED indicator
6	Model A and Model H:
	Color LCD display with status indicator
	Green = Normal
	Yellow = Alarm
	Red = Trip
	Model M: Digital LED display

Display Controls

7	Escape button ESC
8	Down selection button
9	Up selection button
10	Enter button

Trip Setting Interface

11	Long time delay current setting (Ir)
12	Long time delay trip time setting (tr)
13	Short time delay current setting (Isd)
14	Short time delay trip time setting (tsd)
15	Instantaneous current setting (Ii)
16	Ground fault current setting (Ig)
17	Ground fault trip time setting (Tg)
18	Trip test button
20	Rating Plug
19	USB port
21	Transparent cover lock hook

© 2025 NOARK Electric

A25 Series Trip Unit

Product Selection Guide

SU	30	N	A	11F	M
Trip Unit	Protection Type	Model	Control Voltage	Series/Mounting Type	Voltage Conversion
SU	20: LI	NM: LED Display	A: 24Vdc	F: Fixed	M*: with VCM10
	30: LSI	NA: LCD Display & Ammeter	C: 100-130Vac	D: Drawout	
	40: LSIG	NH: LCD Display & Harmonics Metering	D: 200-240Vac		

Rating plug Catalog #
IN12N06
IN12N08
IN12N12
IN12N16

M*: Applicable to only NH-type trip unit

A25 Trip Unit Protection Features			
Type	Protection & Coordination	Setting	Setting Range
Series 2.0 (LI)	Long Delay (L)	Pickup	0.4 to 1.0 x In
		Time	2.0s to 30.0s
	Instantaneous (I)	Pickup	2.0 to 15.0 x @6Ir
Series 3.0 (LSI)	Long Delay (L)	Pickup	0.4 to 1.0 x In
		Time	2.0s to 30.0s
	Short Delay (S)	Pickup	1.5 to 10.0 x @6Ir
		Time	0.1s to 0.4s
			I^2t or Definite Time
	Instantaneous (I)	Pickup	2.0 to 15.0 x In
Series 3.0 (LSI)	Long Delay (L)	Pickup	0.4 to 1.0 x In
		Time	2.0s to 30.0s
	Short Delay (S)	Pickup	1.5 to 10.0 x @6Ir
		Time	0.1s to 0.4s
			I^2t or Definite Time
	Instantaneous (I)	Pickup	2.0 to 15.0 x In
Series 4.0 (LSIG)	Long Delay (L)	Long Delay Pickup	0.4 to 1.0 x In
		Long Delay Time	2.0s to 30.0s
	Short Delay (S)	Short Delay Pickup	1.5 to 10.0 x @6Ir
		Short Delay Time	0.1s to 0.4s
			I^2t or Definite Time
	Instantaneous (I)	Instantaneous Pickup	2.0 to 15.0 x In
	Ground Fault (G)	Ground Fault Pickup	500A to 1200A
		Ground Fault Time	0.1s to 0.4s
			I^2t or Definite Time

A25 Trip Unit Models Display Options									
Model	LED Trip Indicator	LCD Display	Alarm Indication	Phase Current Display	Arc Flash Maintenance Mode	Advanced Protection	Advanced Metering	Zone Selective Interlocking	RS485 Communications (Modbus)
M	Y	N	N	N	Y	N	N	N	N
A	Y	Y	Y	Y	Y	N	N	N	N
H	Y	Y	Y	Y	Y	Y	Y	Y	Y

© 2025 NOARK Electric

A25 Series Trip Unit

Trip Unit Products

Product Family	Frame Type	Protection Type	Control Voltage	NM: LED Display		NA: LCD Display and Ammeter		NH: LCD Display and Harmonic with VCM10	
				Catalog Number	Part Number	Catalog Number	Part Number	Catalog Number	Part Number
A25 Trip Unit	Fixed	LI	24Vdc	SU20NMA11F	1800899	SU20NAA11F	1800908	SU20NHA11FM	1801149
			110-130Vac	SU20NMC11F	1800900	SU20NAC11F	1800909	SU20NHC11FM	1801150
			208-240Vac	SU20NMD11F	1800901	SU20NAD11F	1800910	SU20NHD11FM	1801151
		LSI	24Vdc	SU30NMA11F	1800902	SU30NAA11F	1800911	SU30NHA11FM	1801152
			110-130Vac	SU30NMC11F	1800903	SU30NAC11F	1800912	SU30NHC11FM	1801153
			208-240Vac	SU30NMD11F	1800904	SU30NAD11F	1800913	SU30NHD11FM	1801154
		LSIG	24Vdc	SU40NMA11F	1800905	SU40NAA11F	1800914	SU40NHA11FM	1801155
			110-130Vac	SU40NMC11F	1800906	SU40NAC11F	1800915	SU40NHC11FM	1801156
			208-240Vac	SU40NMD11F	1800907	SU40NAD11F	1800916	SU40NHD11FM	1801157
	Drawout	LI	24Vdc	SU20NMA11D	1800926	SU20NAA11D	1800935	SU20NHA11DM	1801158
			110-130Vac	SU20NMC11D	1800927	SU20NAC11D	1800936	SU20NHC11DM	1801159
			208-240Vac	SU20NMD11D	1800928	SU20NAD11D	1800937	SU20NHD11DM	1801160
		LSI	24Vdc	SU30NMA11D	1800929	SU30NAA11D	1800938	SU30NHA11DM	1801161
			110-130Vac	SU30NMC11D	1800930	SU30NAC11D	1800939	SU30NHC11DM	1801162
			208-240Vac	SU30NMD11D	1800931	SU30NAD11D	1800940	SU30NHD11DM	1801163
		LSIG	24Vdc	SU40NMA11D	1800932	SU40NAA11D	1800941	SU40NHA11DM	1801164
			110-130Vac	SU40NMC11D	1800933	SU40NAC11D	1800942	SU40NHC11DM	1801165
			208-240Vac	SU40NMD11D	1800934	SU40NAD11D	1800943	SU40NHD11DM	1801166

© 2025 NOARK Electric

A25 Series Trip Unit

Technical Specifications

Functions	Model M	Model A	Model H
Protection functions			
Long time	•	•	•
Overload pre-alarm	•	•	•
Short time	•	•	•
Instantaneous	•	•	•
Neutral (4-pole only)	•	•	•
Ground-fault	•	•	•
Current unbalance	•	•	•
Voltage unbalance			•
Overvoltage protection			•
Undervoltage protection			•
Over-frequency			•
Under-frequency			•
Phase sequence			•
Reverse active power			•
Demand value			•
Total Harmonics Distortion			•
Thermal memory	•	•	•
Measurement functions			
Current	•	•	•
Voltage			•
Frequency			•
Power			•
Power factor			•
Ammeter and kilowatt hours			•
Average Demand			•
Total Harmonics Distortion			•
Maintenance function			
Trip records	•	•	•
Alarm records	•	•	•
Operations records	•	•	•
Contact wear records		•	•
Load monitoring			•
Zone Selective Interlocking			•
Arc reduction	•	•	•
Test Button	•	•	•
Other functions			
RS485 communication function			•
Digital input/output DI/DO			•
Real time clock		•	•
LED display	•		
Color LCD Display		•	•

© 2025 NOARK Electric

A25 Series Trip Unit

Technical Specifications

Protection Functions and Settings										
Long Delay protection (L)										
Ir - Long Delay Pickup dial setting (multiples of In)		0.40	0.50	0.60	0.70	0.80	0.90	1.0	Tolerance = ±10%	
Tr - Long Delay Time dial setting (s)		2	4	8	12	16	20	24	27	30
Long Delay Trip Times (s)	t @1.2 x Ir	< 1h								
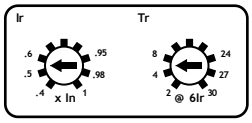	t @2.0 x Ir	18	36	72	108	114	180	216	243	270
	t @6.0 x Ir	2	4	8	12	16	20	24	27	30
	Long time delay inverse time characteristics, $t = \frac{(6Ir)^2}{i^2} \times Tr$									

In = Rating plug value, Tr = Long time delay time, Ir = Long time delay current, i = Short circuit current Tolerance = ±40ms or ±10% whichever is greater

Short Delay protection (S)										
Isd - Short Delay Pickup dial setting (multiples of In)	1.5	2	2.5	3	4	5	6	8	10	Tolerance = ±10%
Tsd - Short Delay Time dial setting (s)	I^2t ON				I^2t OFF				X	Tolerance = ±40ms or ±10% whichever is greater
	0.1	0.2	0.3	0.4	0.4	0.3	0.2	0.1		
Short Delay Trip Times	Dial Range		Current Value			Trip Time (s)				
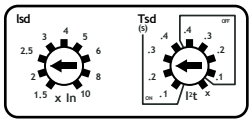	I^2t OFF		< 0.9 x Isd			No Trip				
			> 1.1 x Isd			0.4	0.3	0.2	0.1	
	I^2t ON		< 0.9 x Isd			No Trip				
			≥1.1 x Isd to ≥10 x Ir			Inverse Time				
			>10 x Ir			0.1	0.2	0.3	0.4	
X						Short Delay protection OFF				

© 2025 NOARK Electric

A25 Series Trip Unit

Technical Specifications

Protection Functions and Settings											
Ground Fault protection (G)											
Ig – Ground Fault Pickup dial setting											
	Dial Position	A	B	C	D	E	F	G	H	J	Tolerance = ±10%
	400A <In and ≤1200A	0.2	0.3	0.4	0.5	0.6	0.7	0.8	0.9	1.0	
	In > 1200	500A	640A	720A	800A	880A	960A	1040A	1120A	1200A	
Tg – Ground Fault Delay Time dial setting (s)		I^2t ON					I^2t OFF			X	Tolerance = ±40ms or ±10% whichever is greater
		0.1	0.2	0.3	0.4	0.4	0.3	0.2	0.1		

Ground Fault Trip Times

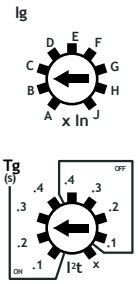

Dial Range	Ground Current Value	Trip Time (s)				
I^2t OFF (s)	<0.9 x Ig >1.1 x Ig	No Trip				In = Rating plug value Ig = Ground Fault Pickup Tg = Ground Fault Time Delay ig = Ground Current
		0.4	0.3	0.2	0.1	
I^2t ON (s)	<0.9 x Ig	No Trip				
	≥1.1x Ig or (ig<In and ig<1200A)	$t = \frac{(1.0In)^2 \times Tg}{ig^2}$ or $t = \frac{(1200)^2 \times Tg}{ig^2}$				
X	Ground Fault protection OFF					

Optional Settings – Model H Only				
Function	Parameter	Min	Max	Step
Over Voltage	Pickup	100V	1200V	1V
	Pickup Delay	0.2s	60s	0.1s
	Drop Out	0.2In	Pickup	1V
	Drop Out Delay	0.2s	60s	0.1s
Under Voltage	Pickup	100V	1200V	1V
	Pickup Delay	0.2s	60s	0.1s
	Drop Out	Pickup	Pickup~1200V	1V
	Drop Out Delay	0.2s	60s	0.1s
Voltage Unbalance	Pickup	2%	30%	1%
	Pickup Delay	0.2s	60s	0.1s
	Drop Out	2%	Pickup	1%
	Drop Out Delay	0.2s	60s	0.1s
Current Unbalance	Pickup	5%	60%	1%
	Pickup Delay	0.1s	40s	0.1s
	Drop Out	5%	Pickup	1%
	Drop Out Delay	10s	200s	1s

© 2025 NOARK Electric

A25 Series Trip Unit

Technical Specifications

Optional Settings – Model H Only (continued)				
Function	Parameter	Min	Max	Step
Demand Unbalance	Pickup	0.2In	In	1A
	Pickup Delay	15s	1500s	1s
	Drop Out	0.2In	Pickup setting	1A
	Drop Out Delay	15s	3000s	1s
Total Harmonic Distortion (Current)	Pickup	8%	60%	0.5%
	Pickup Delay	1s	120s	1s
	Drop Out	8%	Pickup setting	0.5%
	Drop Out Delay	1s	120s	1s
Total Harmonic Distortion (Voltage)	Pickup	4%	10%	0.1%
	Pickup Delay	1s	120s	1s
	Drop Out	4%	Pickup setting	0.1%
	Drop Out Delay	1s	120s	1s
Load Shedding Method 1 (Control two branch loads independently)	Load 1 Pickup	0.2Ir	1.0Ir	1A
	Load 1 Pickup Delay	20%Tr	80%Tr	1%Tr
	Load 2 Pickup	0.2Ir	1.0Ir	1A
	Load 2 Pickup Delay	20%Tr	80%Tr	1%Tr
Load Shedding Method 2 (Control one branch load)	Pickup	0.2Ir	1.0Ir	1A
	Pickup Delay	20%Tr	80%Tr	1%Tr
	Drop Out	0.2Ir	Pickup setting	1A
	Drop Out Delay	10s	600s	1s
Under Frequency	Pickup	45Hz	65Hz	0.5Hz
	Pickup Delay	0.2s	5s	0.1s
	Drop Out	Start setting	65Hz	0.5Hz
	Drop Out Delay	0.2s	36s	0.1s
Over Frequency	Pickup	45Hz	65Hz	0.5Hz
	Pickup Delay	0.2s	5s	0.1s
	Drop Out	45Hz	65Hz	0.5Hz
	Drop Out Delay	0.2s	36s	0.1s
Reverse Active Power	Pickup	5KW	500KW	1V
	Pickup Delay	0.2s	20s	0.1s
	Drop Out	5KW	Pickup setting	1V
	Drop Out Delay	1s	36s	0.1s
Phase Sequence	Settings: ABC or ACB Instantaneous Trip			

© 2025 NOARK Electric

A25 Series Trip Unit

Trip Curves

Selective Protection LSI

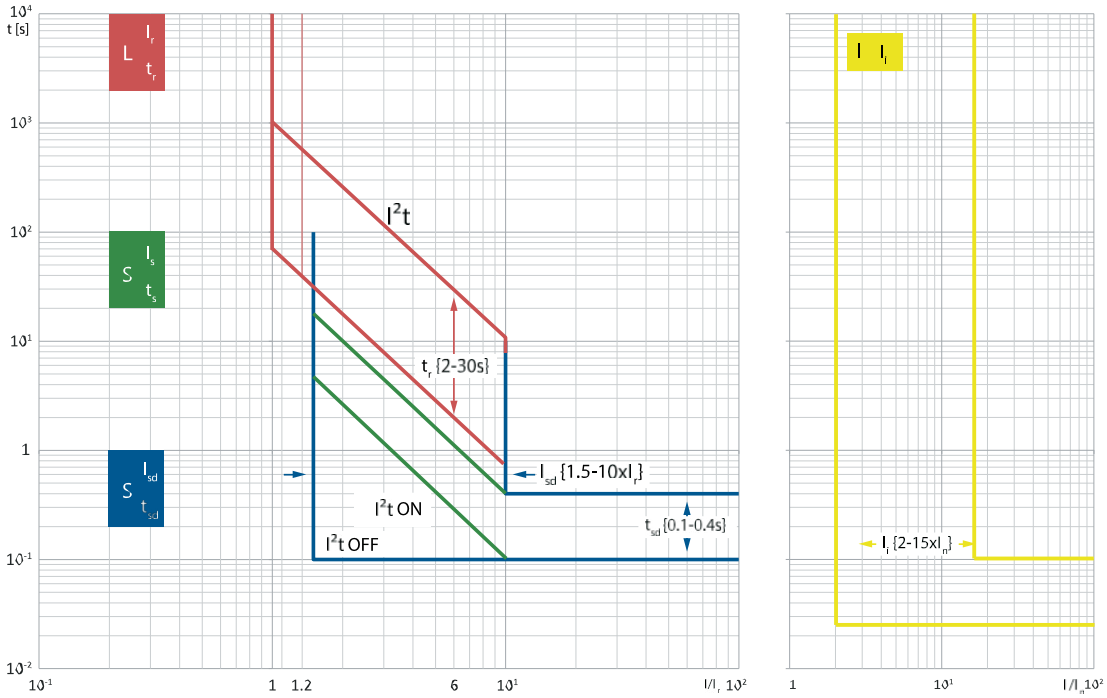

Ground protection curve

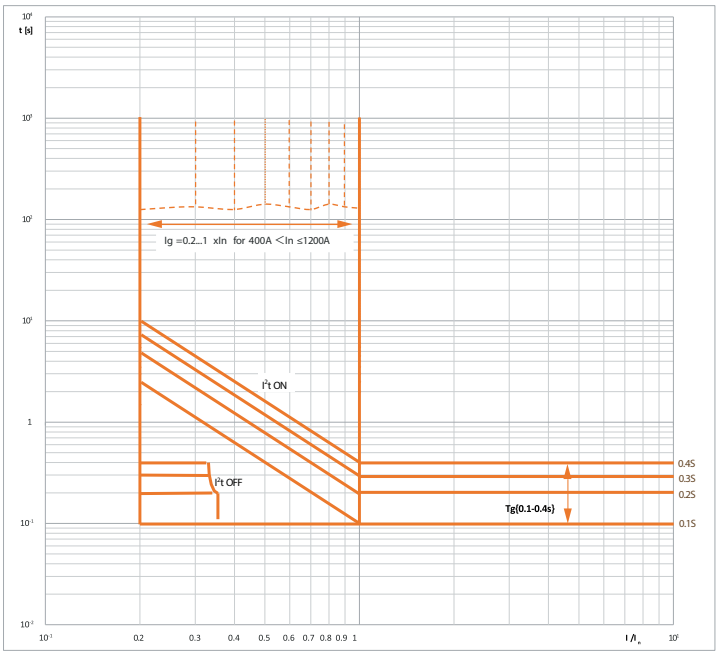

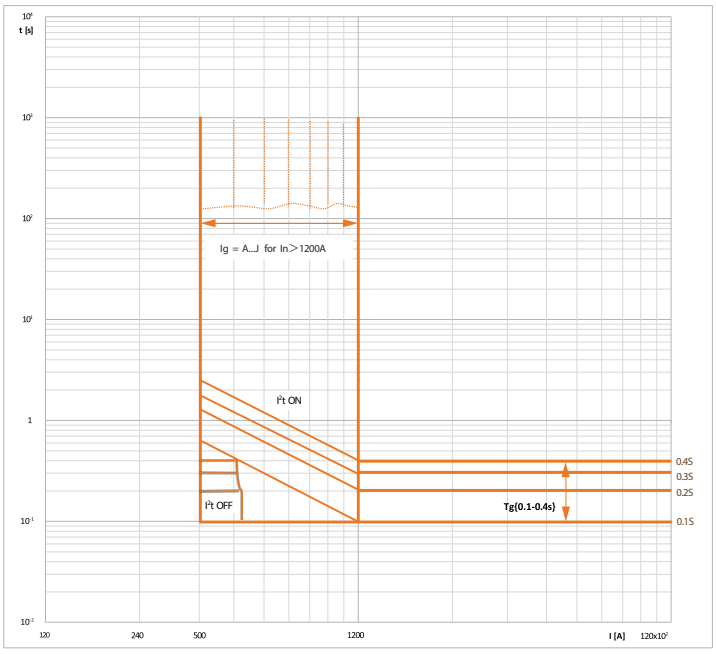

© 2025 NOARK Electric

A25 Series Accessories

Electrical

Shunt Release

Opens the breaker instantaneously when the coil is energized by a voltage input.

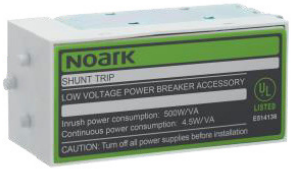

Shunt Trip Release				Field Installable		
Breaker Type	Catalog Number	Part Number	Control Voltage	Inrush/Continuous Power Consumption (W or VA)	Operational Voltage Range (70-110%)	Operating time (ms)
Fixed	SHT11NAF	1800983	24~30Vdc	500 / 4.5	17~33Vdc	≤50
	SHT11NBF	1800984	48~60Vac/dc	500 / 4.5	34~66Vac/dc	≤50
	SHT11NCF	1800985	110~130Vac/dc	500 / 4.5	77~143Vac/dc	≤50
	SHT11NDF	1800986	200~240Vac/dc	500 / 4.5	140~264Vac/dc	≤50
	SHT11NEF	1800987	380~440Vac	500 / 4.5	266~484Vac	≤50
Drawout	SHT11NAD	1800988	24~30Vdc	500 / 4.5	17~33Vdc	≤50
	SHT11NBD	1800989	48~60Vac/dc	500 / 4.5	34~66Vac/dc	≤50
	SHT11NCD	1800990	110~130Vac/dc	500 / 4.5	77~143Vac/dc	≤50
	SHT11NDD	1800991	200~240Vac/dc	500 / 4.5	140~264Vac/dc	≤50
	SHT11NED	1800992	380~440Vac	500 / 4.5	266~484Vac	≤50

Closing Release

Remotely closes the circuit breaker when the coil is energized by a voltage input.

Closing Release				Field Installable		
Breaker Type	Catalog Number	Part Number	Control Voltage	Inrush/Continuous Power Consumption (W or VA)	Operational Voltage Range (70-110%)	Operating time (ms)
Fixed	XF11NAF	1800963	24~30Vdc	500 / 4.5	17~33Vdc	≤50
	XF11NBF	1800964	48~60Vac/dc	500 / 4.5	34~66Vac/dc	≤50
	XF11NCF	1800965	110~130Vac/dc	500 / 4.5	77~143Vac/dc	50
	XF11NDF	1800966	200~240Vac/dc	500 / 4.5	146~264Vac/dc	≤50
	XF11NEF	1800967	380~440Vac	500 / 4.5	266~484Vac	≤50
Drawout	XF11NAD	1800968	24~30Vdc	500 / 4.5	17~33Vdc	≤50
	XF11NBD	1800969	48~60Vac/dc	500 / 4.5	34~66Vac/dc	≤50
	XF11NCD	1800970	110~130Vac/dc	500 / 4.5	77~143Vac/dc	≤50
	XF11NDD	1800971	200~240Vac/dc	500 / 4.5	146~264Vac/dc	≤50
	XF11NED	1800972	380~440Vac	500 / 4.5	266~484Vac	≤50

Undervoltage Release

Opens the breaker when the supply voltage falls to 30–60% of rated voltage. If the release is not energized to 85% of its supply voltage, the circuit breaker cannot be closed electrically or manually.

Undervoltage				Field Installable			
Breaker Type	Catalog Number	Part Number	Control Voltage	Inrush Continuous Power Consumption (W or VA)	Operational Voltage Range (85-110%)	Dropout Voltage (30-60%)	Operating time (ms)
Fixed	UVT11NAF	1801003	24~30Vdc	500 / 4.5	20~33Vdc	7~18Vdc	≤70
	UVT11NBF	1801004	48~60Vac/dc	500 / 4.5	41~66Vac/dc	14~36Vdc	≤70
	UVT11NCF	1801005	110~130Vac/dc	500 / 4.5	94~143Vac/dc	33~78Vac/Vdc	≤70
	UVT11NDF	1801006	200~240Vac/dc	500 / 4.51	170~264Vac/dc	60~144Vac/Vdc	≤70
	UVT11NEF	1801007	380~440Vac	500 / 4.53	323~484Vac	114~264Vac	≤70
Drawout	UVT11NAD	1801008	24~30Vdc	500 / 4.5	20~33Vdc	7~18Vdc	≤70
	UVT11NBD	1801009	48~60Vac/dc	500 / 4.5	41~66Vac/dc	14~36Vdc	≤70
	UVT11NCD	1801010	110~130Vac/dc	500 / 4.5	94~143Vac/dc	33~78Vac/Vdc	≤70
	UVT11NDD	1801011	200~240Vac/dc	500 / 4.5	170~264Vac/dc	60~144Vac/Vdc	≤70
	UVT11NED	1801012	380~440Vac	500 / 4.5	323~484Vac	114~264Vac	≤70

© 2025 NOARK Electric

A25 Series Accessories

Electrical

Auxiliary Contact

Monitors ON/OFF status of the circuit breaker or non-automatic switch and provides contacts to electrically indicate its position remotely.

Contact configuration:
44: 4NO and 4NC; 66: 6NO and 6NC;
44C: 4 Form C; 66C: 6 Form C

Auxiliary Contact			Field Installable	
Frame Size	Breaker/Switch	Contacts	Catalog Number	Part Number
A25/ASD25	Fixed	4NO+4NC	AX11NF44	1801021
		6NO+6NC	AX11NF66	1801022
		4NO/NC	AX11NF44C	1801023
		6NO/NC	AX11NF66C	1801024
	Drawout	4NO+4NC	AX11ND44	1801025
		6NO+6NC	AX11ND66	1801026
		4NO/NC	AX11ND44C	1801027
		6NO/NC	AX11ND66C	1801028

Voltage (V)		Rated Current (A)
AC	240	5
	480	2
DC	110	0.25
	220	0.25

Position Indicator

Indicates the position of the breaker – connected, testing, disconnected. For drawout type devices only.
3 CO Form C contacts, one contact for each breaker position.

Connected to secondary terminals #58, 59, 60 (Connected), #61, 62, 63 (Test), #64, 65, 66 (Disconnected). Factory installed only. In the scope of delivery there are additional secondary terminals #58-66.

Position Indicator – Field installable		
Frame Size	Catalog Number	Part Number
A25/ASD25	EF11N	1801030

© 2025 NOARK Electric

A25 Series Accessories

Electrical

Rear Terminal Connectors

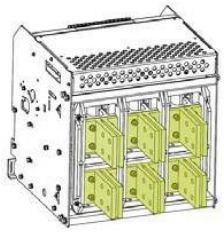

Rear Connection Plate				Field Installable	
Frame Size	Poles	Breaker/Switch	Rated Current	Catalog Number	Part Number
A25/ASD25	3P	Fixed type	600A/800A/1200A	RCP11N3F1200	1801065
		Fixed type	1600A/2000A	RCP11N3F2000	1801066
		Fixed type	2500A	RCP11N3F2500	1801067
		Drawout type	600A/800A/1200A	RCP11N3D1200	1801068
		Drawout type	1600A/2000A	RCP11N3D2000	1801069
	4P	Fixed type	600A/800A/1200A	RCP11N4F1200	1801070
		Fixed type	1600A/2000A	RCP11N4F2000	1801071
		Fixed type	2500A	RCP11N4F2500	1801072
		Drawout type	600A/800A/1200A	RCP11N4D1200	1801073
		Drawout type	1600A/2000A	RCP11N4D2000	1801074

Note: This item is included with every new A25 Breaker. Renewal part only.

Motor Operator

Charges the closing spring of mechanism when the circuit breaker is closed only. Mechanical charging handle can be used with or without power supply. Equipped with a limit switch contact signals that spring is charged.

Motor Operator					Field Installable	
Breaker Type	Catalog Number	Part Number	Control Voltage	Inrush/ Continuous Power Consumption (W or VA)	Operational Voltage Range (85-110%)	Charging time (s)
Fixed	MD11NAF	1801041	24~30Vdc	800 / 200	20~33Vdc	≤4
	MD11NBF	1801042	48~60Vac/dc	1200 / 200	41~66Vdc	≤4
	MD11NCF	1801043	110~130Vac/dc	1800 / 180	94~143Vac/dc	≤4
	MD11NDF	1801044	200~240Vac/dc	1800 / 180	170~264Vac/dc	≤4
	MD11NEF	1801045	380~440Vac	1800 / 180	323~484Vac	≤4
Drawout	MD11NAD	1801046	24~30Vdc	800 / 200	20~33Vdc	≤4
	MD11NBD	1801047	48~60Vac/dc	1200 / 200	41~66Vdc	≤4
	MD11NCD	1801048	110~130Vac/dc	1800 / 180	94~143Vac/dc	≤4
	MD11NDD	1801049	200~240Vac/dc	1800 / 180	170~264Vac/dc	≤4
	MD11NED	1801050	380~440Vac	1800 / 180	323~484Vac	≤4

Ready To Close Contact

This device is intended to be installed in A25 series power circuit breaker depending on customer's requirements.
It is used to indicate whether the operating mechanism can be closed.

Frame Size	Breaker/Switch	Catalog Number	Part Number
A25/ASD25	Fixed	PF11NF	1801053
	Drawout	PF11ND	1801054

© 2025 NOARK Electric

A25 Series Accessories

Electrical

Voltage Conversion Module: A25

The Voltage conversion module VCM10 is used to pick up the Power Circuit voltage signal and reduce the voltage to safe levels on the secondary terminals of the breaker. VCM10 is selected by default if the H-type control unit has been selected, and the voltage protection is enabled.

Description	VCM10
Voltage input	0-1500Vac
Power consumption	<1W
Installation	35mm Din-rail
Applicable Trip unit	H
Applicable Software version	0.92 or higher

Field Installable					
Product	Part Number	Frame Size	Poles	Breaker	Rated Current
+VCM10	1800488	A25	3P/4P	Fixed/Drawout	600 - 2500A

External current transformer for Neutral

An external transformer for N-pole protection of three-pole circuit breakers in four-wire network, installed on the neutral conductor, the current transformer enables measurement and protection of the neutral conductor.

Position Indicator – Field installable		
Frame Size	Catalog Number	Part Number
A25/ASD25	NCT11N	1801078
	RCT-1800-COIL 11	1801075

Note: External neutral protection for three-pole breaker only.

Energy-limiting maintenance switch

ELM10 is used to mitigate arc hazards and protect personal safety during product maintenance. It should be used in coordination with Air Circuit Breakers with arc reduction. While the Energy limiting function can be set and turned on in all trip unit models (M, A & H), the ELM10 is programmable only with the Harmonic 'H' version trip unit and the applicable software should be 0.91 or higher.

Description	ELM10
Ambient temp (°C)	-20°C+70°C
Pollution class	Class 3
Installation category	II
Rated voltage Ue (V)	AC480V/DC24
Rated frequency (Hz)	50/60
Enclosure protection class	IP40
Electrical/mechanical endurance (times)	1500
Inrush/Continuous Power Consumption (W)	≤5W

Frame Size	Catalog Number	Part Number
A25/ASD25	ELM10	1800448

© 2025 NOARK Electric

A25 Series Accessories

Mechanical

Door Frame

IP40 Protection

IP40 Door Frame – Field Installable			
Frame Size	**Configuration**	**Catalog Number**	**Part Number**
A25/ASD25	Fixed	CDP11N	1800439
	Drawout	DDP11N	1801060

Note: This item is included with every new A25 Breaker. Renewal part only.

Pushbutton Locking Cover

Prevents access to the control push buttons of the breaker. Factory installed only. Lock is not included.

Pushbutton Locking Cover - Factory Installable			
Frame Size	**Catalog Number**	**Part Number**	**Material**
A25/ASD25	+VBP12N	1800314	Plastic
	+VBP11NM	1801055	Metal

Phase Barrier

Provides improved isolation between the terminal connectors on the back of the breaker or cassette. 3-pole or 4-pole kit.

Phase Barrier – Field Installable Only				
Frame Size	**Breaker/ Switch**	**Quantity**	**Catalog Number**	**Part Number**
A25/ASD25	Fixed	2 pcs for 3-pole	PHS12N2	1800334
		3 pcs for 4-pole	PHS12N3	1800335
	Drawout	2 pcs for 3-pole	DPS12N2	1800336
		3 pcs for 4-pole	DPS12N3	1800337

© 2025 NOARK Electric

A25 Series Accessories

Mechanical

Mechanical Interlocking With Cables

Cable-connected mechanical interlock mechanism that is used to prevent two interlocked breakers from closing at the same time. interlocking of 2 or 3 (in preparation) breakers. Cable length for Maximum distance between mounting positions of the interlocks is 78in (2m). Suitable for A25 Power circuit breaker and ASD25 Non-automatic switch 2 interlocks and 2 cables (2 breakers version), 3 interlocks and 6 cables (3 breakers version).

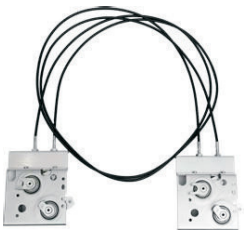

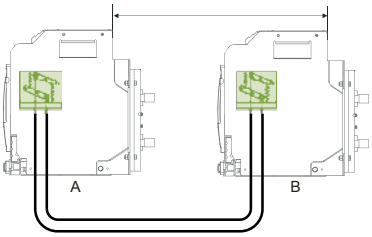

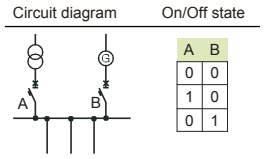

Mechanical Interlocks with Cables – Field installable		
Frame Size	**Catalog Number**	**Part Number**
A25/ASD25	IPA12N	1800339

Door Interlock

Ensures that the door or cover of distribution board the breaker compartment cannot be opened when the circuit breaker is closed or in its connected or test position.

Door Interlocks - Factory Installable			
Frame Size	**Interlock type**	**Catalog Number**	**Part Number**
A25/ASD25	Position interlock	+VPEC11NP	1801061
	Status interlock	+VPEC11NS	1801062

OFF Position Keylock Operated Lock

For A25 Power circuit breaker and ASD25 non-automatic switch. Locks the breaker in the OFF position to ensure the breaker cannot be closed. One circuit breaker is provided with one lock and one key. Two circuit breakers are provided with two locks and one key. Three circuit breakers are provided with three locks and two keys.

Field installable			
Frame Size	**Configuration**	**Catalog Number**	**Part Number**
A25/ASD25	1 lock 1 key	KLK12N1	1800319
	2 locks 1 key	KLK12N2	1800320
	3 locks 2 keys	KLK12N3	1800321

Kirk key Interlock kit

The interlock kit is compatible with Kirk key Type C Interlock device with part number - KCAM00010

Item number	Product name	Description
1801111	KKC11N	Kirk key Type C interlock kit for UL A25 ACB, loose supply

© 2025 NOARK Electric

A32 Series Air Circuit Breakers

Product Overview

NOARK Electric is proud to offer its A32 family of Air Circuit Breakers, Non-Automatic Disconnect Switches, and accessories. Our A32 products are optimized for OEMs and are manufactured under world-class quality systems in our ISO accredited factories. Like all NOARK products, these breakers are designed to deliver high quality, superior performance and outstanding value.

A32 Air Circuit Breakers are available up to 3200A and are capable of IC ratings up to 100kA at 635 Volts, the maximum voltage can be up to 847Vac. UL Listed and CSA Certified, the A32 family of products provide design standardization for OEMs no matter where they do business. A32 breakers offer a broad range of available trip units, accessories and communications options. They are the ideal OEM solution for low voltage switchgear and customized power distribution assemblies used in Data Centers, Standby Power, Industrial, Healthcare and Commercial applications.

Ratings

- 254Vac to 847Vac
- 800A through 3200A
- IC ratings up to 100kA at 635Vac
- Short-Time Withstand, 100kA at 635Vac
- 50 or 60Hz operation
- 3-pole and 4-pole designs
- 10,000 Operations, before maintenance (Mechanical)
- 6000 Operations, before maintenance (Electrical)
- Meets ANSI C37.13, C37.16, C37.17 and C37.50

Protection & Control Options

- LS[1], LSI[2] or LSIG[3] Protection
- Standard LED display
- Color LCD display available
- Optional multi-metering trip unit (H model) with total harmonic distortion analysis and waveform capture
- Stored energy operating mechanism
- AC and DC rated motor operators, shunt trip and undervoltage release accessories
- Arc Flash Reduction Maintenance Mode
- ELM10 maintenance switch, compatible with 'H' model trip unit only
- Zone Selective Interlocking
- RS-485 Modbus Communication available

Approvals

- UL 1066, Low-Voltage AC and DC Air Circuit Breakers
- CSA C22.2 NO.268
- ANSI C37.13 Low Voltage Air Circuit Breakers
- ANSI C37.16 Low Voltage Air Circuit Breakers Ratings, Related Requirements and Applications
- ANSI C37.17 – IEEE Standard for Trip Systems
- ANSI C37.50 – Low Voltage AC Air Circuit Breakers, Test Procedure

Design Features

- UL/CSA field-installable accessories
- Rear horizontal or vertical connections
- Through-the-door design
- 3-pole and 4-pole designs
- OEM optimized Cassette
- Phase barriers (optional)
- Available as Disconnect Switch (ASD32)

1. LI: Long Time-delay Overload and Instantaneous Short Circuit.
2. LSI: Long Time-delay Overload, Short Time-delay Short Circuit, and Instantaneous Short Circuit
3. LSIG: Long Time-delay Overload, Short Time delay Short Circuit, Instantaneous Short Circuit, and Equipment Ground Fault

© 2025 NOARK Electric

A32 Series Air Circuit Breakers

Product Label

An extensive range of accessories are available for the A32 power (air) circuit breakers. Each accessory can be installed as an independent unit, thanks to the modular architecture of the A32. This makes installation and maintenance fast and simple for technicians.

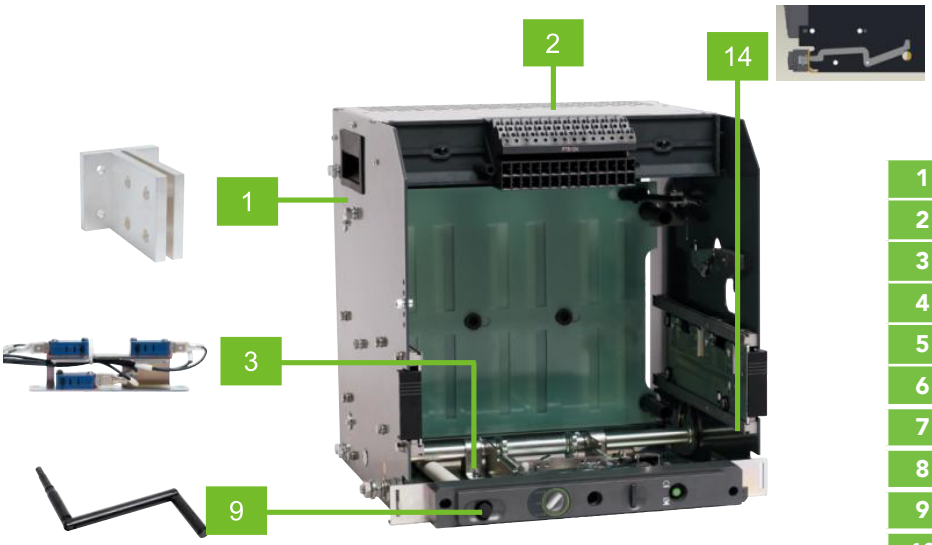

1	Rear connection plate
2	Cassette
3	Position indicator
4	Ready to close contact
5	Auxiliary contact
6	Pushbutton lock device
7	OFF position key lock
8	Trip unit
9	Racking handle
10	Door frame
11	Motor Operator
12	Accessory Compartment Under-voltage release Shunt trip release Closing release
13	Mechanical interlocks with cables
14	Door interlocks for drawout type

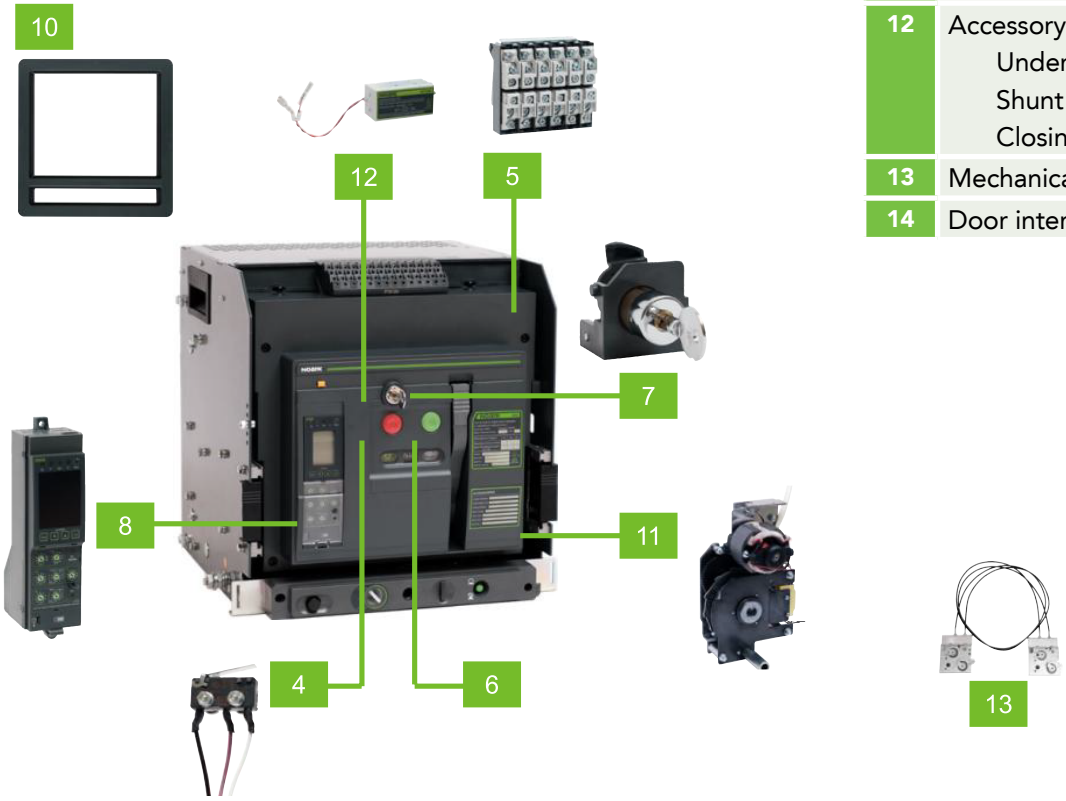

© 2025 NOARK Electric

A32 Series Air Circuit Breakers

Product Selection Guide

A32/ASD32 Product Selection Guide

A	32	H	3	F	H	800
NOARK UL 1066 Air Circuit Breakers	Frame Size	Interrupting/Short time withstanding Rating	Poles	Mounting Type	Terminal Connection	Rated Current
A: Circuit Breaker	32: 3200A	Q: 65kA @ 600Vac	3: 3-pole	F: Fixed	H: Horizontal	800: 800A
ASD: Non-Auto Switch		R: 85kA @ 600Vac	4: 4-pole	D: Drawout[2]	V: Vertical[1]	1600: 1600A
		H: 100kA @ 600Vac				2000: 2000A
						2500: 2500A
						3200: 3200A

Cassette Product Selection Guide

CAS12	N	3	H	1600
Cassette	Device Category	Poles	Terminal Connection	Rated Current
CAS12	N: UL	3: 3-pole	H: Horizontal	1600: 800A, 1600A
		4: 4-pole	V: Vertical[1]	2500: 2000A, 2500A
				3200: 3200A

1. 3200A is available with vertical terminal connectors only.
2. Cassette included with Drawout Frame

Note: An assembled breaker unit must include: - ACB breaker Frame and Trip unit.
Trip Unit need to be ordered separately.

For full list of optional accessories, see Page 68-74.
For PCB Selection Guide, see Appendix II on Page 78.

© 2025 NOARK Electric

A32 Series Air Circuit Breakers

A32/ASD32 Products

Product Family	Number of Poles	Frame Type	Connection Type	Rated Current (A)	Q Interrupting 65kA @ 600Vac		R Interrupting 85kA @ 600Vac		H Interrupting 100kA @ 600Vac	
					Catalog Number	Part Number	Catalog Number	Part Number	Catalog Number	Part Number
A32 Breaker	3	Fixed	Horizontal	800	A32Q3FH800	1800000	A32R3FH800	1800034	A32H3FH800	1800068
				1600	A32Q3FH1600	1800001	A32R3FH1600	1800035	A32H3FH1600	1800069
				2000	A32Q3FH2000	1800002	A32R3FH2000	1800036	A32H3FH2000	1800070
				2500	A32Q3FH2500	1800003	A32R3FH2500	1800037	A32H3FH2500	1800071
			Vertical	800	A32Q3FV800	1800004	A32R3FV800	1800038	A32H3FV800	1800072
				1600	A32Q3FV1600	1800005	A32R3FV1600	1800039	A32H3FV1600	1800073
				2000	A32Q3FV2000	1800006	A32R3FV2000	1800040	A32H3FV2000	1800074
				2500	A32Q3FV2500	1800007	A32R3FV2500	1800041	A32H3FV2500	1800075
				3200	A32Q3FV3200	1800450	A32R3FV3200	1800451	A32H3FV3200	1800452
		Drawout	Horizontal	800	A32Q3DH800	1800008	A32R3DH800	1800042	A32H3DH800	1800076
				1600	A32Q3DH1600	1800009	A32R3DH1600	1800043	A32H3DH1600	1800077
				2000	A32Q3DH2000	1800010	A32R3DH2000	1800044	A32H3DH2000	1800078
				2500	A32Q3DH2500	1800011	A32R3DH2500	1800045	A32H3DH2500	1800079
			Vertical	800	A32Q3DV800	1800012	A32R3DV800	1800046	A32H3DV800	1800080
				1600	A32Q3DV1600	1800013	A32R3DV1600	1800047	A32H3DV1600	1800081
				2000	A32Q3DV2000	1800014	A32R3DV2000	1800048	A32H3DV2000	1800082
				2500	A32Q3DV2500	1800015	A32R3DV2500	1800049	A32H3DV2500	1800083
				3200	A32Q3DV3200	1800016	A32R3DV3200	1800050	A32H3DV3200	1800084

Product Family	Number of Poles	Frame Type	Connection Type	Rated Current (A)	Q - Withstand Rating 65kA @ 600Vac		R - Withstand Rating 85kA @ 600Vac		H - Withstand Rating 100kA @ 600Vac	
					Catalog Number	Part Number	Catalog Number	Part Number	Catalog Number	Part Number
ASD32 Disconnect Switch	3	Fixed	Horizontal	800	ASD32Q3FH800	1800102	ASD32R3FH800	1800136	ASD32H3FH800	1800170
				1600	ASD32Q3FH1600	1800103	ASD32R3FH1600	1800137	ASD32H3FH1600	1800171
				2000	ASD32Q3FH2000	1800104	ASD32R3FH2000	1800138	ASD32H3FH2000	1800172
				2500	ASD32Q3FH2500	1800105	ASD32R3FH2500	1800139	ASD32H3FH2500	1800173
			Vertical	800	ASD32Q3FV800	1800106	ASD32R3FV800	1800140	ASD32H3FV800	1800174
				1600	ASD32Q3FV1600	1800107	ASD32R3FV1600	1800141	ASD32H3FV1600	1800175
				2000	ASD32Q3FV2000	1800108	ASD32R3FV2000	1800142	ASD32H3FV2000	1800176
				2500	ASD32Q3FV2500	1800109	ASD32R3FV2500	1800143	ASD32H3FV2500	1800177
				3200	ASD32Q3FV3200	1800456	ASD32R3FV3200	1800457	ASD32H3FV3200	1800458
		Drawout	Horizontal	800	ASD32Q3DH800	1800110	ASD32R3DH800	1800144	ASD32H3DH800	1800178
				1600	ASD32Q3DH1600	1800111	ASD32R3DH1600	1800145	ASD32H3DH1600	1800179
				2000	ASD32Q3DH2000	1800112	ASD32R3DH2000	1800146	ASD32H3DH2000	1800180
				2500	ASD32Q3DH2500	1800113	ASD32R3DH2500	1800147	ASD32H3DH2500	1800181
			Vertical	800	ASD32Q3DV800	1800114	ASD32R3DV800	1800148	ASD32H3DV800	1800182
				1600	ASD32Q3DV1600	1800115	ASD32R3DV1600	1800149	ASD32H3DV1600	1800183
				2000	ASD32Q3DV2000	1800116	ASD32R3DV2000	1800150	ASD32H3DV2000	1800184
				2500	ASD32Q3DV2500	1800117	ASD32R3DV2500	1800151	ASD32H3DV2500	1800185
				3200	ASD32Q3DV3200	1800118	ASD32R3DV3200	1800152	ASD32H3DV3200	1800186

© 2025 NOARK Electric

A32 Series Air Circuit Breakers

A32/ASD32 Products

Product Family	Number of Poles	Frame Type	Connection Type	Rated Current (A)	Catalog Number	Part Number
A32 Drawout Cassette	3	Drawout	Horizontal	800	CAS12N3H1600	1800250
				1600		
				2000	CAS12N3H2500	1800251
				2500		
			Vertical	800	CAS12N3V1600	1800252
				1600		
				2000	CAS12N3V2500	1800253
				2500		
				3200	CAS12N3V3200	1800254

Note: Drawout Frame Selection includes the Cassette. Renewal part only.

© 2025 NOARK Electric

A32 Series Air Circuit Breakers

Technical Specifications

A32 Air Circuit Breakers		A32Q	A32R	A32H
Poles		3-pole | 4-pole		
Mounting Type		Fixed | Drawout		
Rated Current (A)	Fixed	800 | 1600 | 2000 | 2500 | 3200		
	Drawout			
Rated Maximum Voltage Vac		254 | 508 | 635 | 847		
Frequency (Hz)		50 | 60		
Interrupting rating at rated maximum voltage (kA)	254Vac	65	85	100
	508Vac	65	85	100
	635Vac	65	85	100
	847Vac	65	75	85
Short time withstand rating (kA)	254Vac	65	85	100
	508Vac	65	85	100
	635Vac	65	85	100
	847Vac	65	75	85
Operating time (ms)	Open	<70		
	Close	<40		
Number of operations before maintenance is required	Mechanical	10000		
	Electrical (635Vac)	6000		
	Electrical (847Vac)	3000		

ASD32 Non-Automatic Switches		ASD32Q	ASD32R	ASD32H
Poles		3-pole | 4-pole		
Installation		Fixed | Drawout		
Rated Current (A)	Fixed	800 | 1600 | 2000 | 2500 | 3200		
	Drawout			
Rated Maximum Voltage (Vac)		254 | 508 | 635 | 847		
Frequency (Hz)		50 | 60		
Short time withstand rating (kA)	254Vac	65 | 85 | 100		
	508Vac	65	85	100
	635Vac	65	85	100
	847Vac	65	75	85
Number of operations before maintenance is required	Mechanical	10000		
	Electrical (635Vac)	6000		
	Electrical (847Vac)	3000		

Overall Dimensions			Height	Width	Depth
Breaker Frame H×W×D (in)	Fixed	3-pole 800A~1600A	15.43	16.93	14.61
		3-pole 2000A~2500A			15.55
		3-pole 3200A			17.44
		4-pole 800A~1600A		21.46	14.61
		4-pole 2000A~2500A			15.55
		4-pole 3200A			17.44
	Drawout	3-pole 800A~2500A	16.93	17.13	21.26
		3-pole 3200A			23.98
		4-pole 800A~2500A		21.65	21.26
		4-pole 3200A			23.98
Minimum Enclosure HxWxD (in)	Drawout	3-pole	21.65	23.62	18.11
		4-pole		25	18.11
	Fixed	3-pole		20.47	14.17
		4-pole		25	

Weight lb (kg)		Fixed	Drawout
Air Circuit Breakers A32			
	3-pole 2000A~2500A	133 (60)	245 (111)
	3-pole 3200A	147 (67)	264 (120)
Non-Automatic Switches - ASD32	3-pole 800A~1600A	117 (53)	208 (95)
	3-pole 2000A~2500A	126 (57)	239 (208)
	3-pole 3200A	141 (64)	258 (117)

© 2025 NOARK Electric

A32 Series Air Circuit Breakers

Environmental Conditions

Ambient Temperature

A32 series Circuit breakers can operate in the following environmental conditions:

With M1 Trip Unit: -40℃ ~ 70℃;

With A/H2 Trip Unit: -20℃ ~ 70℃;

A32 series Circuit breakers can operate at higher temperatures than the reference temperature 40℃, in this case, the derating coefficients shown in the table below must be applied.

Model	Rated Current (A)	Temperature (℃)						
		<40	45	50	55	60	65	70
A32	800	100%	100%	100%	100%	100%	100%	100%
	1600	100%	100%	100%	100%	100%	100%	100%
	2000	100%	100%	100%	100%	100%	100%	93%
	2500	100%	95%	92%	88%	83%	80%	75%
	3200	100%	95%	92%	88 %	83%	80%	75%

Altitude

A32 series Circuit breakers do not undergo changes in rated performance up to 2000m. Beyond this altitude, the derating coefficients shown in the table below must be applied.

	Altitude (m)			
	<2000	2600	3900	4900
Rated Voltage (V)	1xUe	0.95xUe	0.8xUe	0.7xUe
Rated Current (A)	1xIn	0.99xIn	0.96xIn	0.94xIn

Humidity

The relative humidity must not exceed 85% at 40°C, while the monthly average maximum of relative humidity in the wettest month must not exceed 90%. The effect of surface condensation caused by temperature changes on product performance should be taken into consideration.

1. 'M' Model: basic protection with LED display.
2. 'A' Model: basic protection, Ammeter and LCD display.
   'H' Model: advance protection, multi-metering, Harmonics detection and LCD display.

© 2025 NOARK Electric

A32 Series Air Circuit Breakers

Dimensions

Fixed Type

800A/1600A - 3P
Vertical installation

in (mm)

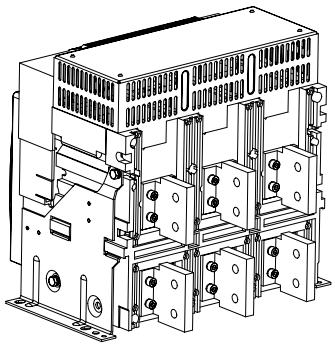

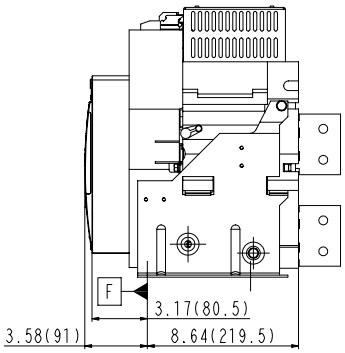

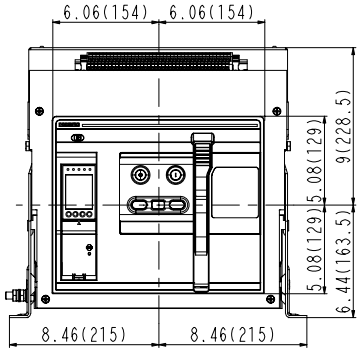

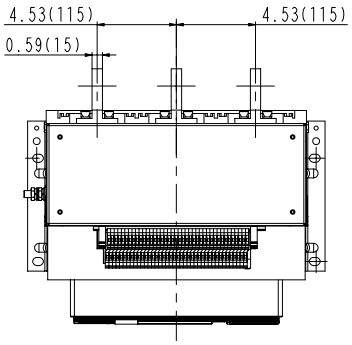

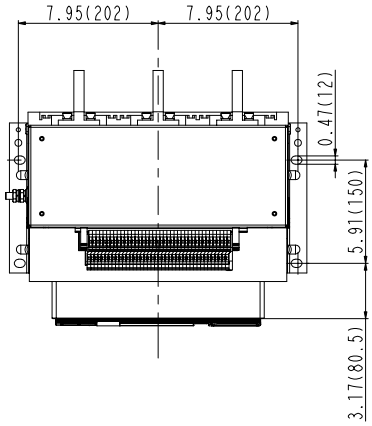

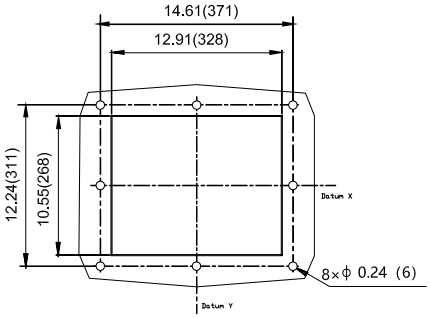

Through-the-door cutout dimensions for
Breaker or Disconnect switch

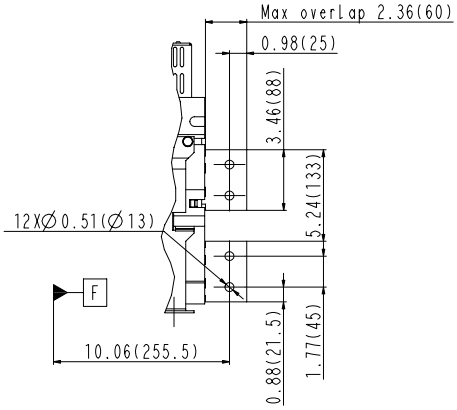

© 2025 NOARK Electric

A32 Series Air Circuit Breakers

Dimensions

Fixed Type

800A/1600A - 3P
Horizontal installation

in (mm)

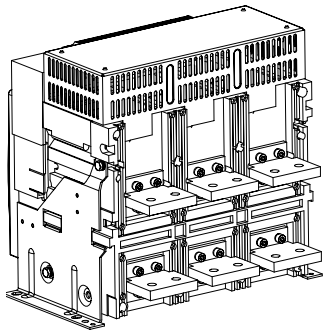

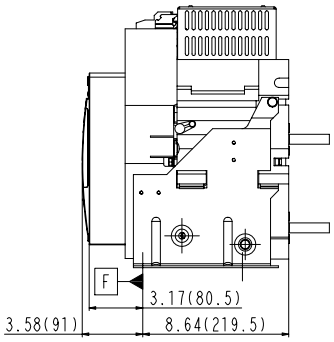

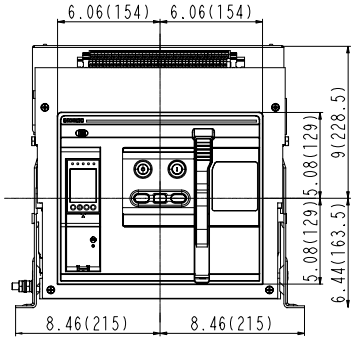

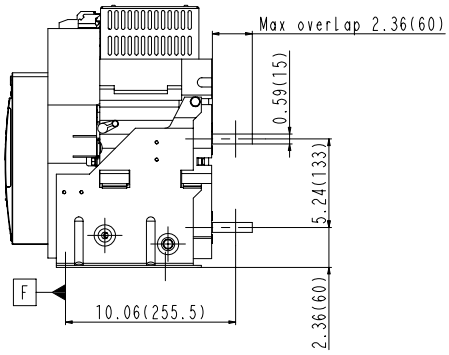

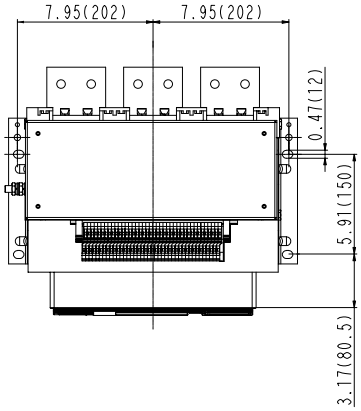

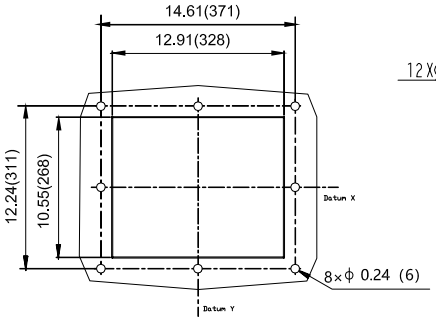

Through-the-door cutout dimensions for
Breaker or Disconnect switch

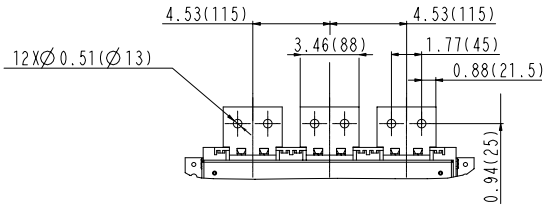

© 2025 NOARK Electric

A32 Series Air Circuit Breakers

Dimensions

Fixed Type

2000A/2500A - 3P
Vertical installation

in (mm)

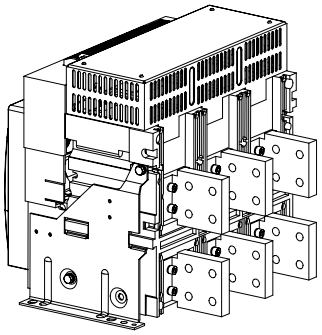

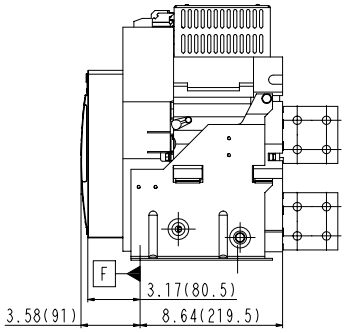

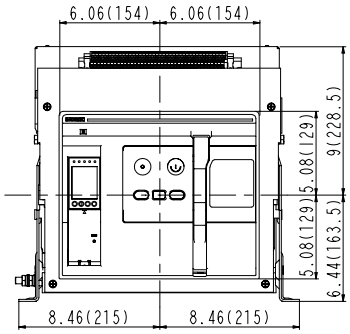

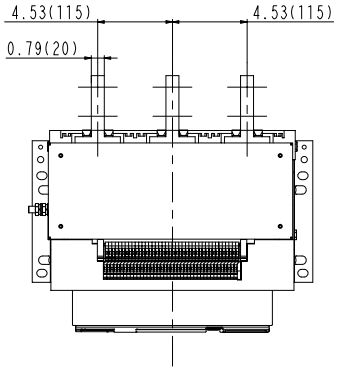

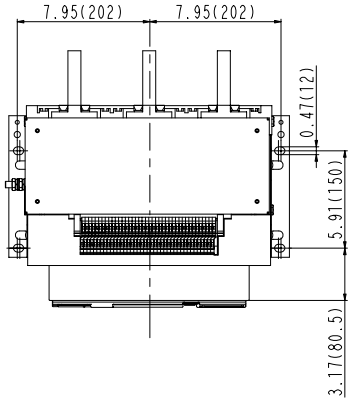

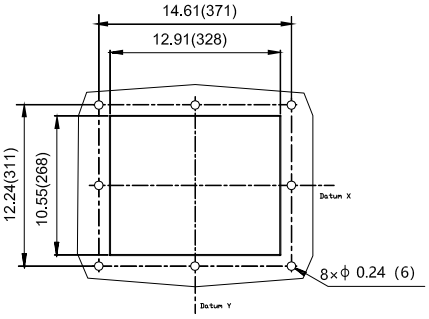

Through-the-door cutout dimensions for
Breaker or Disconnect switch

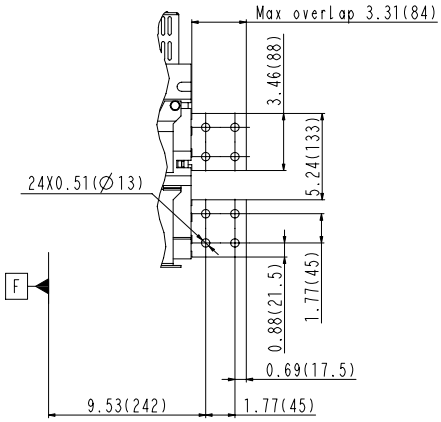

© 2025 NOARK Electric

A32 Series Air Circuit Breakers

Dimensions

Fixed Type

2000A/2500A - 3P
Horizontal installation

in (mm)

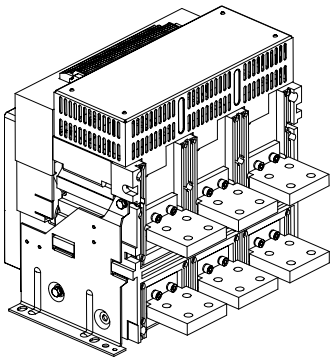

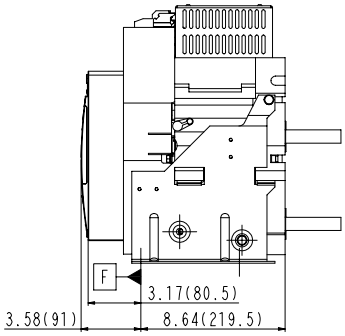

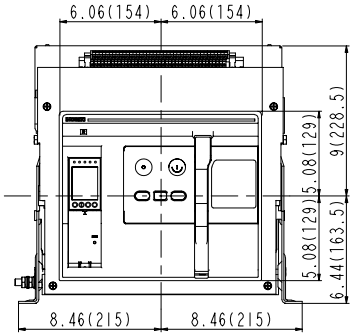

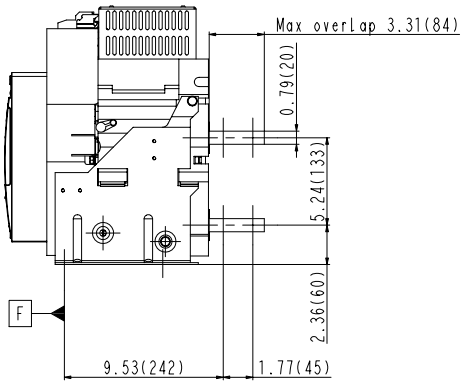

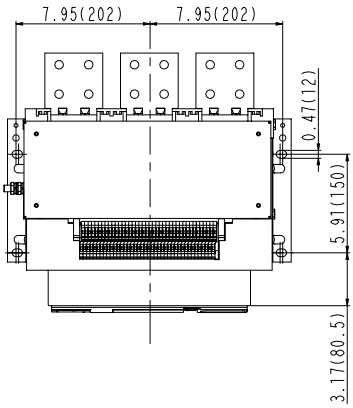

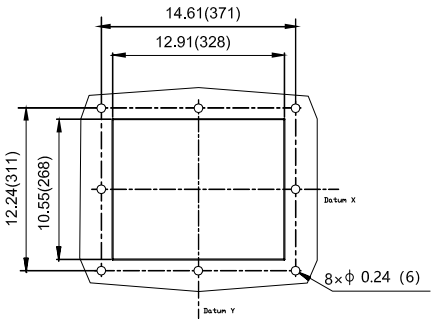

Through-the-door cutout dimensions for
Breaker or Disconnect switch

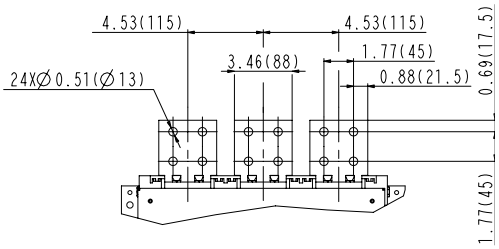

© 2025 NOARK Electric

A32 Series Air Circuit Breakers

Dimensions

Fixed Type

3200A - 3P
Vertical installation

in (mm)

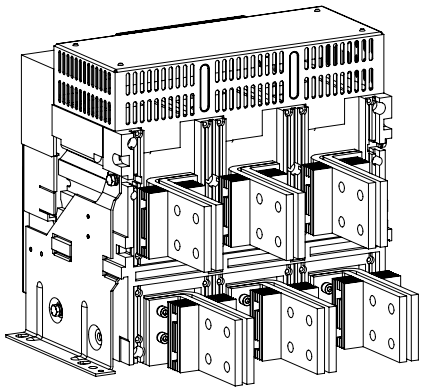

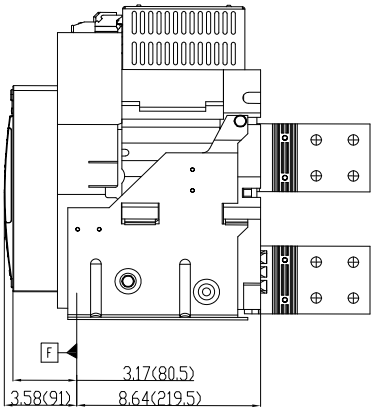

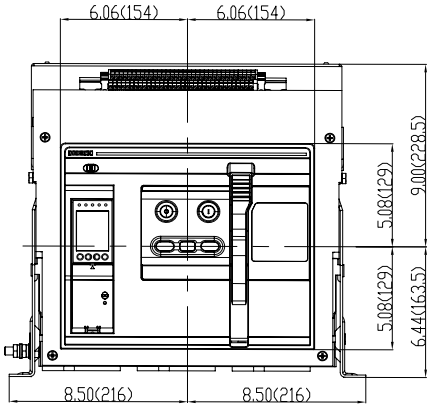

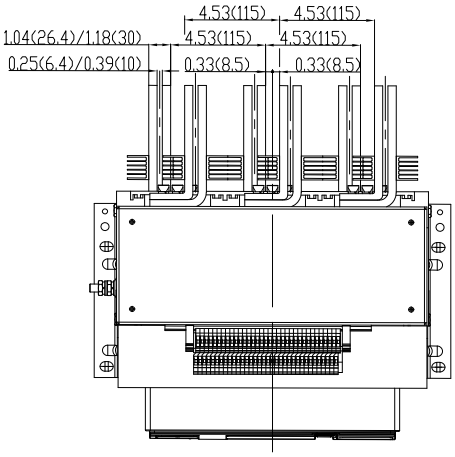

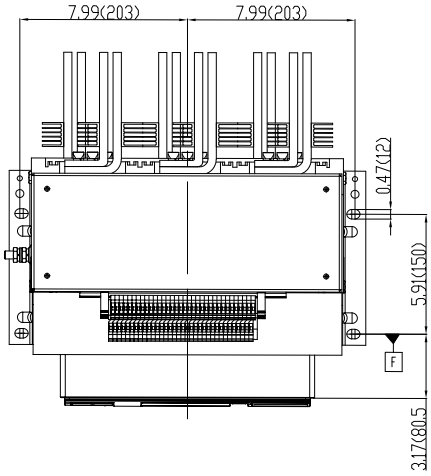

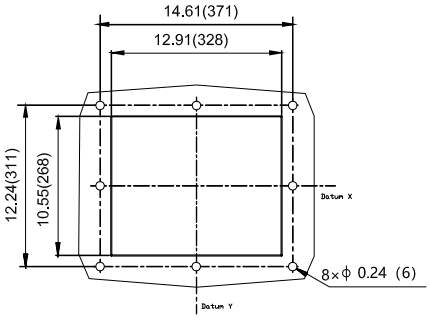

Through-the-door cutout dimensions for
Breaker or Disconnect switch

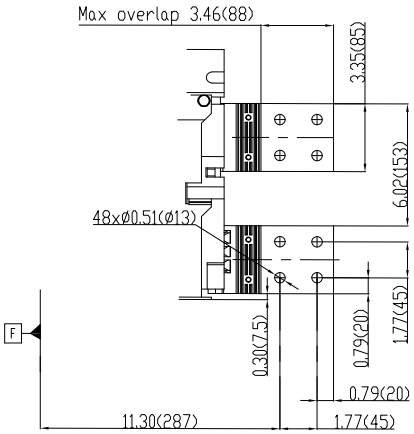

© 2025 NOARK Electric

A32 Series Air Circuit Breakers

Dimensions

Withdrawable Type

800A/1600A - 3P
Vertical installation

in (mm)

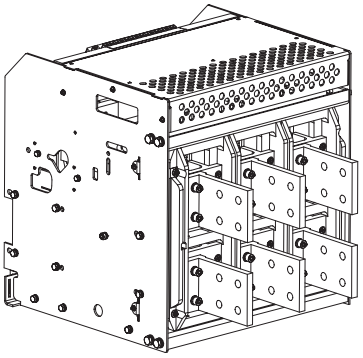

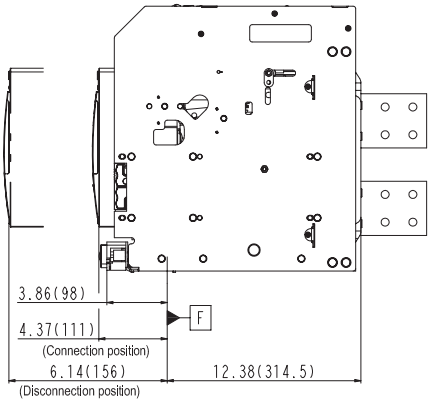

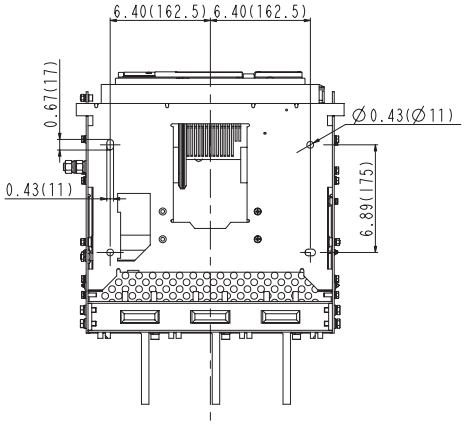

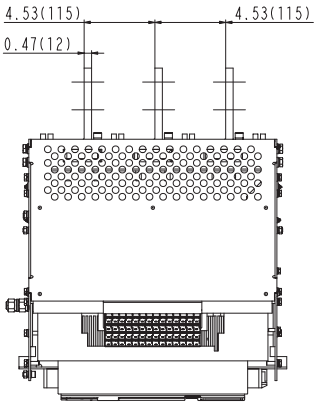

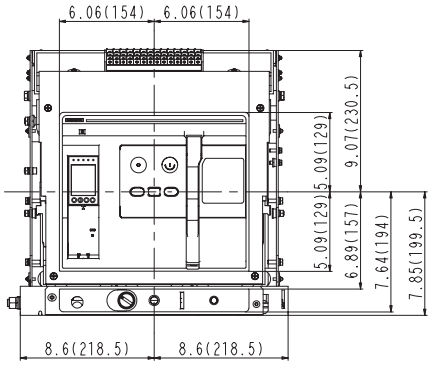

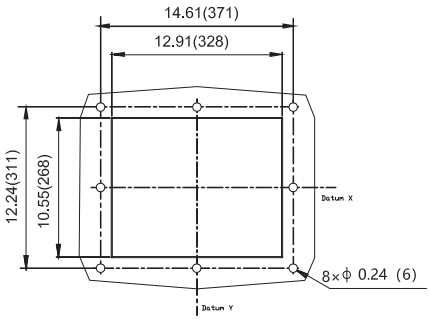

Through-the-door cutout dimensions for
Breaker or Disconnect switch

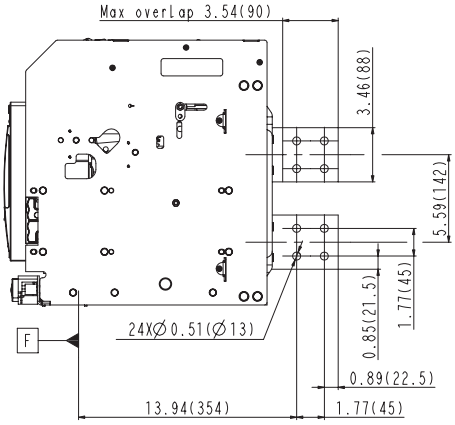

© 2025 NOARK Electric

A32 Series Air Circuit Breakers

Dimensions

Withdrawable Type

800A/1600A - 3P
Horizontal installation

in (mm)

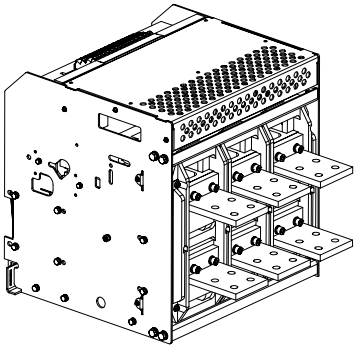

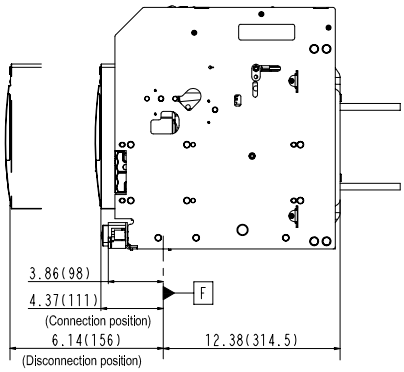

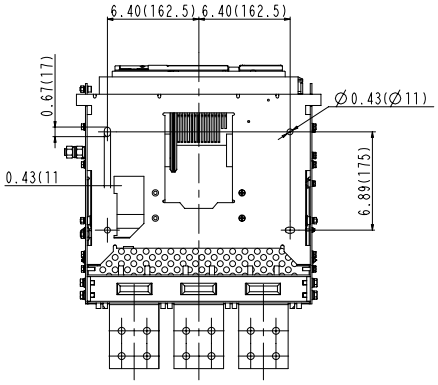

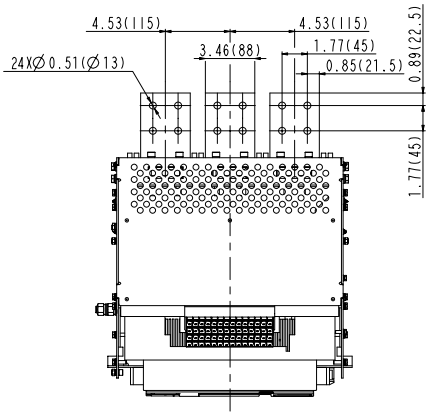

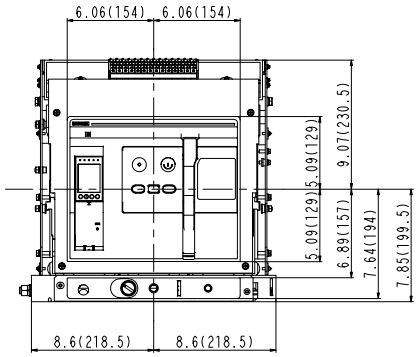

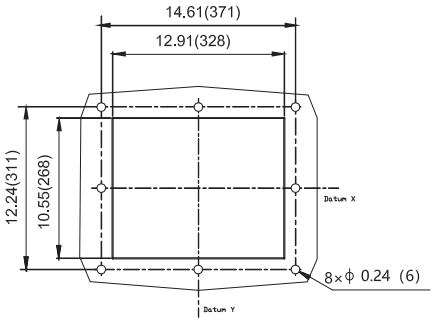

Through-the-door cutout dimensions for
Breaker or Disconnect switch

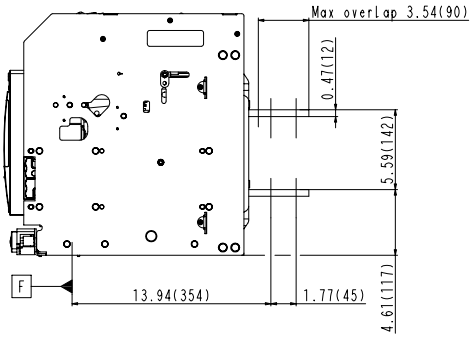

© 2025 NOARK Electric

A32 Series Air Circuit Breakers

Dimensions

Withdrawable Type

2000A/2500A - 3P
Vertical installation

in (mm)

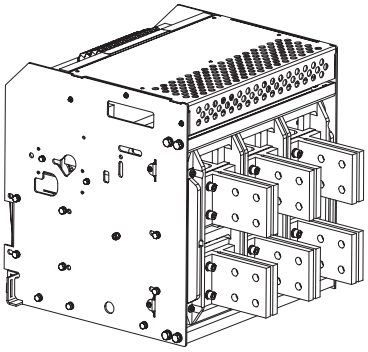

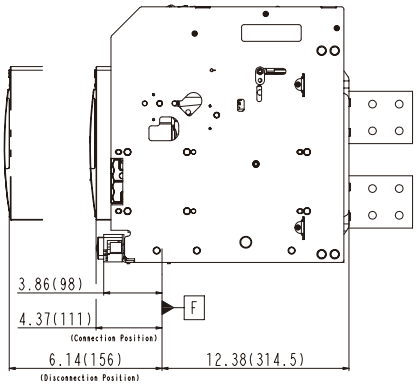

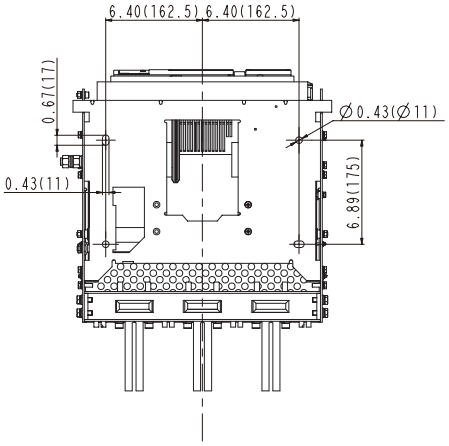

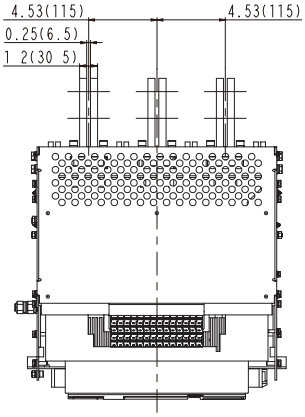

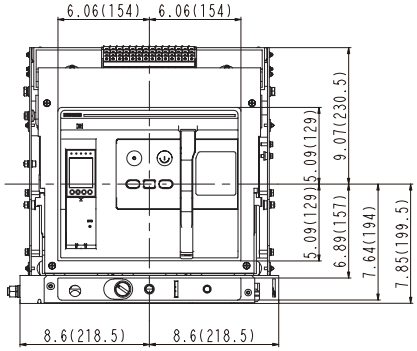

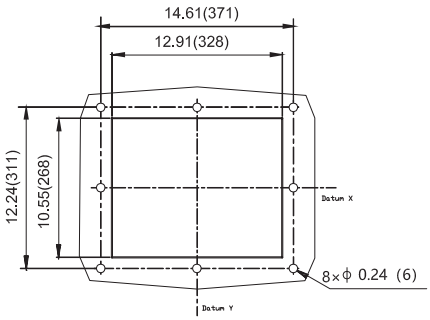

Through-the-door cutout dimensions for
Breaker or Disconnect switch

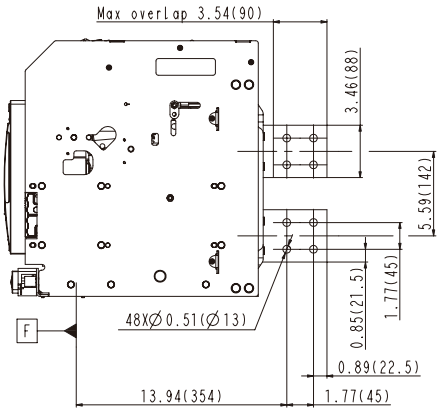

© 2025 NOARK Electric

A32 Series Air Circuit Breakers

Dimensions

Withdrawable Type

2000A/2500A - 3P
Horizontal installation

in (mm)

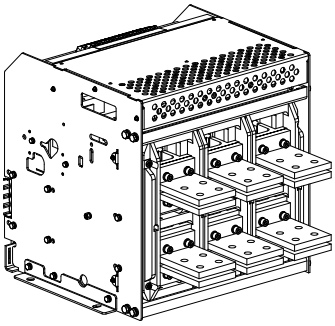

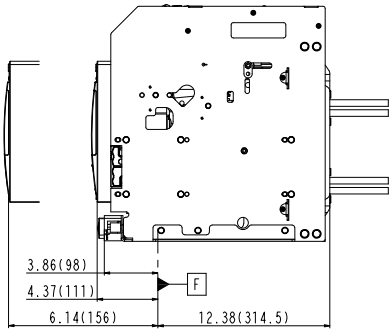

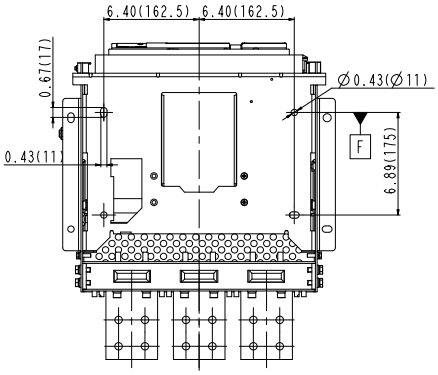

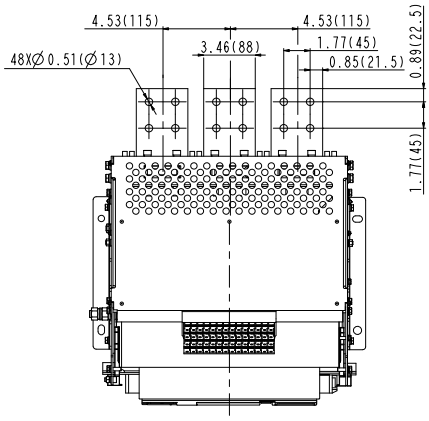

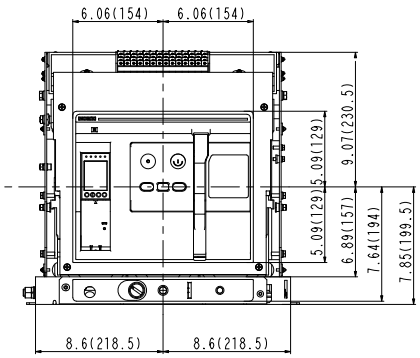

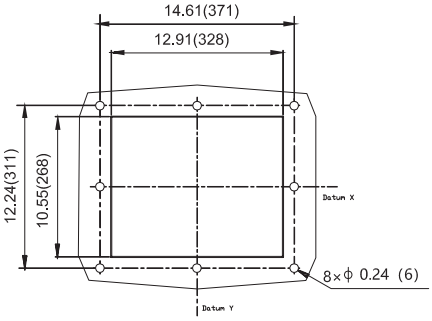

Through-the-door cutout dimensions for
Breaker or Disconnect switch

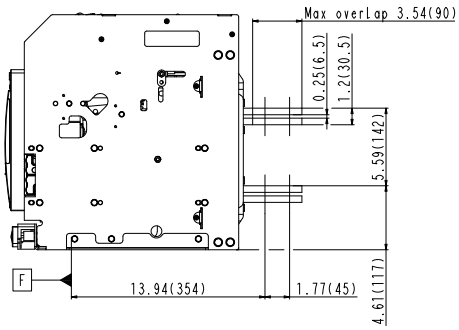

© 2025 NOARK Electric

A32 Series Air Circuit Breakers

Dimensions

Withdrawable Type

3200A - 3P
Vertical installation

in (mm)

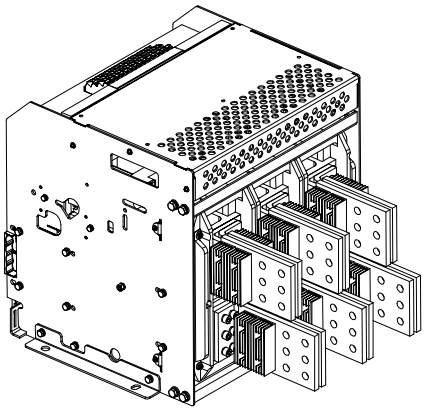

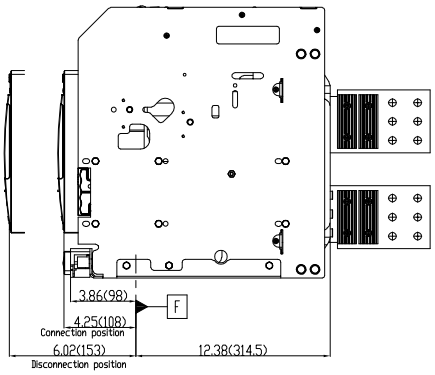

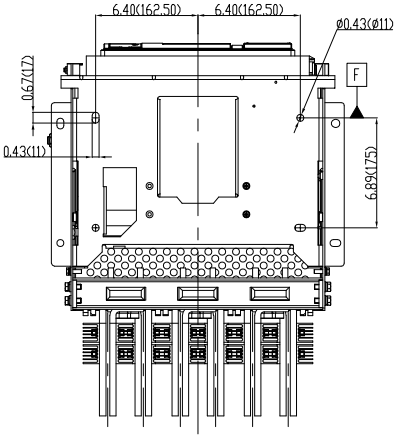

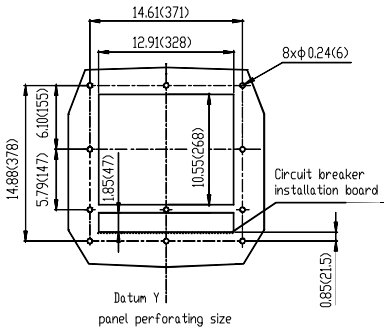

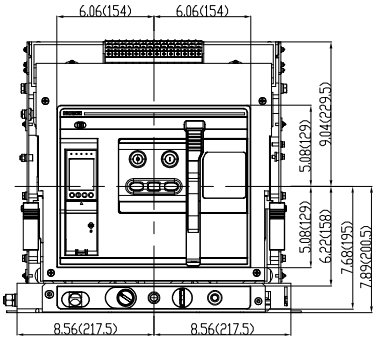

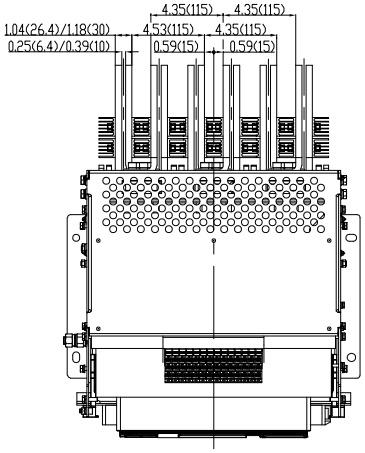

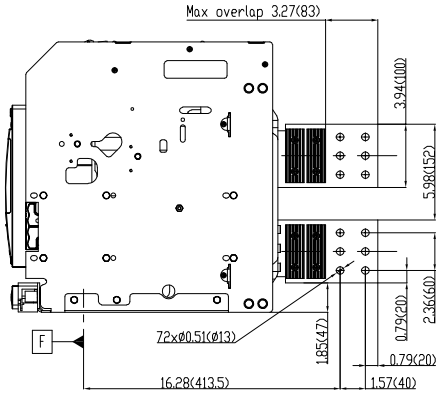

© 2025 NOARK Electric

A40 Series Air Circuit Breakers

Product Overview

A40 Air Circuit Breakers and the accessories conform with ANSI C37.13, C37.16, C37.17 and C37.50 standards and are UL 1066 certified.

A40 Air Circuit Breakers are available at 4000A and are capable of interrupting ratings up to 100kA at 635 Volts, the maximum voltage can be up to 847Vac. UL Listed and CSA Certified, the A40 family of products provide design standardization for OEMs no matter where they do business.

A40 breakers offer a broad range of available trip units, accessories and communications options. They are the ideal OEM solution for low voltage switchgear and customized power distribution assemblies used in Data Centers, Standby Power, Industrial, Healthcare and Commercial applications.

Ratings

- 254Vac to 847Vac
- 4000A
- Interrupting Capacity ratings up to 100kA @ 635Vac and 85kA @ 847Vac
- Short-Time Withstand, 100kA @ 635Vac and 85kA @ 847Vac
- 50 or 60Hz operation
- 3-pole and 4-pole designs
- 10,000 Operations, before maintenance (Mechanical)
- 4000 cycles @ 635Vac, 3000 cycles @ 847Vac before maintenance (Electrical)
- Meets ANSI C37.13, C37.16, C37.17 and C37.50

Approvals

- UL 1066, Low-Voltage AC and DC Air Circuit Breakers
- CSA C22.2 NO.268
- ANSI C37.13 Low Voltage Air Circuit Breakers
- ANSI C37.16 Low Voltage Air Circuit Breakers Ratings, Related Requirements and Applications
- ANSI C37.17 – IEEE Standard for Trip Systems
- ANSI C37.50 – Low Voltage AC Air Circuit Breakers, Test Procedure

Protection & Control Options

- LS[1], LSI[2] or LSIG[3] Protection
- Standard LED display
- Color LCD display available
- Optional multi-metering trip unit (H model) with total harmonic distortion analysis and waveform capture
- Stored energy operating mechanism
- AC and DC rated motor operator, shunt trip and undervoltage release accessories
- Arc Flash Reduction Maintenance Mode
- ELM10 maintenance Switch, compatible with 'H' model trip unit only.
- Voltage Conversion Module for high voltage protections
- Neutral CT - solid bar or rope type for neutral protections
- Zone Selective Interlocking
- RS-485 Modbus Communication available

Design Features

- Compact size with 3P breaker width 17.76 inches (451mm) only
- UL field-installable accessories
- 3-pole and 4-pole designs
- Phase barriers (optional)
- Available as Disconnect Switch (ASD40)

1. LI: Long Time-delay Overload and Instantaneous Short Circuit.
2. LSI: Long Time-delay Overload, Short Time-delay Short Circuit, and Instantaneous Short Circuit
3. LSIG: Long Time-delay Overload, Short Time delay Short Circuit, Instantaneous Short Circuit, and Equipment Ground Fault

© 2025 NOARK Electric

A40 Series Air Circuit Breakers

Product Label

1	Shunt trip release
	Under-voltage release
	Closing release
2	Ready to close contact
3	Door frame
4	Rating plug
5	Trip unit
6	Auxiliary contact
7	OFF position key lock
8	Pushbutton lock device
9	Motor Operator
10	External current transformer for Neutral
11	Mechanical interlocks with cables
12	Voltage conversion module
13	Energy-limiting maintenance switch

© 2025 NOARK Electric

A40 Series Air Circuit Breakers

Product Selection Guide

A40/ASD40 Product Selection Guide

A	40	H	3	F	H	4000
NOARK UL 1066 Power Circuit Breakers	Frame Size	Interrupting/Short time withstanding Rating	Poles	Mounting Type	Terminal Connection	Rated Current
A: Circuit Breaker	40: 4000A	Q: 65kA @ 600Vac	3: 3-pole	F: Fixed	V: Vertical[1]	4000: 4000A
ASD: Non-Auto Switch		R: 85kA @ 600Vac	4: 4-pole			
		H: 100kA @ 600Vac				

1. 4000A is available with vertical terminal connectors only.
   Note: An assembled breaker unit must include the ACB breaker Frame and Trip unit.
   For full list of optional accessories, see Page 68-74.
   For PCB Selection Guide, see Appendix III on Page 81.

© 2025 NOARK Electric

A40 Series Air Circuit Breakers

A40/ASD40 Products

Product Family	Number of Poles	Frame Type	Connection Type	Rated Current (A)	Interrupting Capacity		Catalog Number	Part Number
					600Vac	800Vac		
A40	3	Fixed	Vertical	4000	65kA	65kA	A40Q3FV4000	1800464
					85kA	75kA	A40R3FV4000	1800465
					100kA	85kA	A40H3FV4000	1800466

Product Family	Number of Poles	Frame Type	Connection Type	Rated Current (A)	Interrupting Capacity		Catalog Number	Part Number
					600Vac	800Vac		
ASD40	3	Fixed	Vertical	4000	65kA	65kA	ASD40Q3FV4000	1800476
					85kA	75kA	ASD40R3FV4000	1800477
					100kA	85kA	ASD40H3FV4000	1800478

© 2025 NOARK Electric

A40 Series Air Circuit Breakers

Technical Specifications

A40 Air Circuit Breakers			A40Q	A40R	A40H
Pole			3-pole | 4-pole		
Mounting Type			Fixed		
Rated current (A)			4000		
Rated Maximum Voltage (Vac)			254/508/635/847		
Frequency (Hz)			50/60		
Interrupting rating at rated maximum voltage (kA)		254Vac	65	85	100
		508Vac	65	85	100
		635Vac	65	85	100
		847Vac	65	75	85
Short time withstand current (kA)		254Vac	65	85	100
		508Vac	65	85	100
		635Vac	65	85	100
		847Vac	65	75	85
Operating time (ms)		Open	≤30		
		Close	≤70		
Life cycle (time)	Mechainal	Without maintenance	10000	10000	10000
	Electrical	Without maintenance 635Vac	4000	4000	4000
		Without maintenance 847Vac	3000	3000	3000

A40 Non Automatic Switches			ASD40Q	ASD40R	ASD40H
Pole			3-pole | 4-pole		
Mounting Type			Fixed		
Rated current (A)			4000		
Rated Maximum Voltage (Vac)			254/508/635/847		
Frequency (Hz)			50/60		
Short time withstand current (kA)		254Vac	65	85	100
		508Vac	65	85	100
		635Vac	65	85	100
		847Vac	65	75	85
Operating time (ms)		Open	≤30		
		Close	≤70		
Life cycle (time)	Mechainal	Without maintenance	10000	10000	10000
	Electrical	Without maintenance 635Vac	4000	4000	4000
		Without maintenance 847Vac	3000	3000	3000

Overall Dimensions			Height	Width	Depth
Overall dimensions in (mm)	Fixed	3-pole	15.43 (392)	17.76 (451)	12.22 (310.5)
		4-pole	15.43 (392)	22.32 (567)	12.22 (310.5)

Weight			lb (kg)
A40 Power Circuit Breaker	Fixed	3-pole	183 (83)
		4-pole	229 (104)
ASD40 Non-Auto Switch	Fixed	3-pole	176 (80)
		4-pole	222 (101)

© 2025 NOARK Electric

A40 Series Air Circuit Breakers

Environmental Conditions

Ambient Temperature

A series Circuit breakers can operate in the following environmental conditions:

With M1 Trip Unit: -40°C ~ 70°C;

With A/H2 Trip Unit: -20°C ~ 70°C;

A40 series Circuit breakers can operate at higher temperatures than the reference temperature 40°C, in this case, the derating coefficients shown in the table below must be applied.

Model	Rated Current (A)	Temperature (°C)						
		<40	45	50	55	60	65	70
A40	4000	100%	90%	85%	80%	75%	70%	65%

Altitude

A40 series Circuit breakers do not undergo changes in rated performance up to 2000m. Beyond this altitude, the derating coefficients shown in the table below must be applied

	Altitude (m)			
	<2000	2600	3900	4900
Rated Voltage (V)	1xUe	0.95xUe	0.8xUe	0.7xUe
Rated Current (A)	1xIn	0.99xIn	0.96xIn	0.94xIn

Humidity

The relative humidity must not exceed 85% at 40℃, while the monthly average maximum of relative humidity in the wettest month must not exceed 90%. The effect of surface condensation caused by temperature changes on product performance should be taken into consideration

1. 'M' Model: basic protection with LED display.
2. 'A' Model: basic protection, Ammeter and LCD display.
   'H' Model: advance protection, multi-metering, Harmonics detection and LCD display.

© 2025 NOARK Electric

A40 Series Air Circuit Breakers

Dimensions

Fixed Type

4000A - 3P

Vertical installation

in/mm

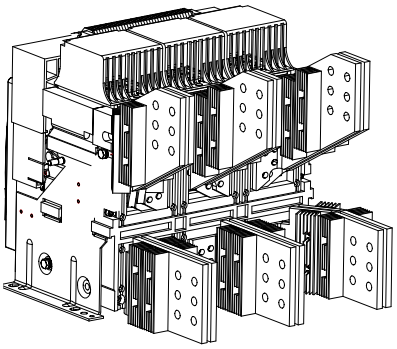

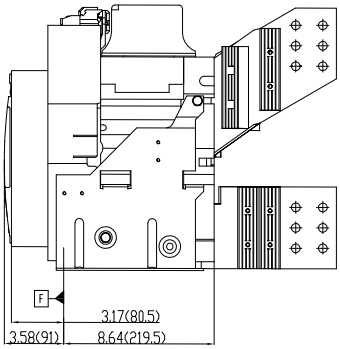

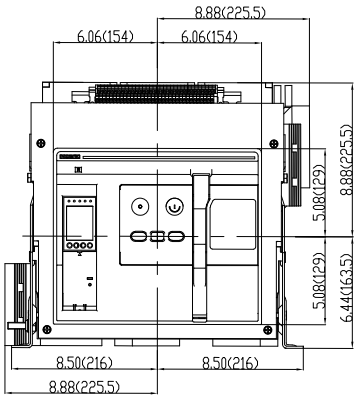

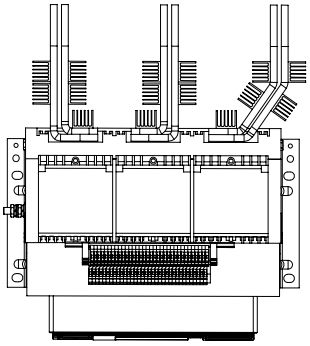

upper busbar

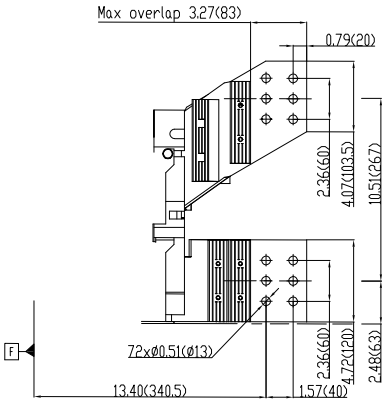

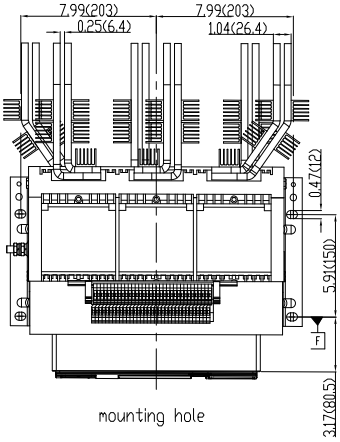

mounting hole

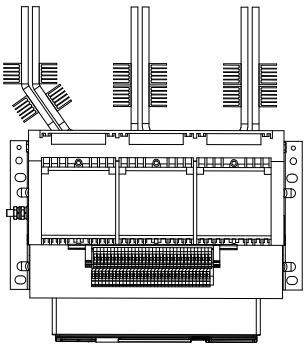

lower busbar

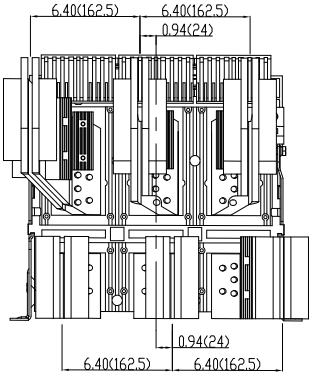

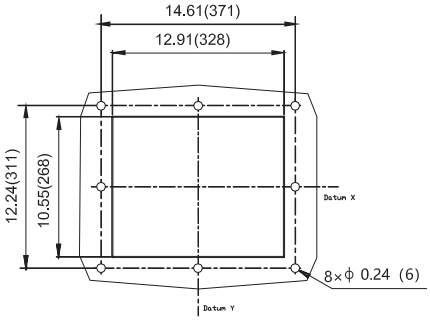

Panel door cut-out dimensions for Breaker or Disconnect switch

© 2025 NOARK Electric

A32/A40 Series Trip Unit

Product Overview

A32/A40 Trip Units offer the advanced electronic protection and control functionality required for power distribution and feeder protection in today's increasingly complex power systems. The A32/A40 trip unit's purpose-built electronic circuits and microprocessors measure the breaker's electrical values against pre-set or user selected parameters for overload, short circuit, current unbalance, over/under voltage, and over/under frequency. When required, a residual ground current transformer provides sensing for ground fault protection.

In addition to the standard LI, LSI and LSIG circuit protection functions, A32/A40 trip units offer advanced Digital Metering, Arc Flash Reduction Mode and Zone Selective Interlocking. Communications capability is available, ensuring that the trip unit's metered values and status can be transmitted to any required monitoring or control networks.

A32/A40 Trip Units consist of three models, each providing different levels of control, display, diagnostics, and communications options, meeting the requirements of a wide range of end-use applications. Each model can be ordered in one of three protection configurations.

Models:

- Model M – LED display
- Model A – Color LCD display with a 3-phase ammeter
- Model H – Color LCD display with multi-metering and total harmonic distortion waveform capture

Protection Configurations:

- LI: Long Time-delay Overload, Instantaneous Short Circuit
- LSI: Long Time-delay Overload, Short Time-delay Short Circuit, Instantaneous Short Circuit
- LSIG: Long Time-delay Overload, Short Timedelay Short Circuit, Instantaneous Short Circuit, Equipment Ground Fault

Features:

- Microprocessor based true rms sensing
- Discrete rotary trip setting dials
- Cause of trip LEDs
- Unit status LED
- Making / breaking protection (MCR[1])
- Ready-To-Close Indicator
- Available zone selective interlocking
- Available arc flash reduction mode
- Available RS-485 communications
- USB port for power & communication
- Service short circuit protection (HSISC[2])

1. The MCR function immediately trips the circuit breaker (<50ms) when the short circuit current exceeds the pickup current setting during closing operation. This function prevents the circuit breaker from closing when there is short circuit in the system. After the circuit breaker is closed, the MCR is locked and kept inoperative.

2. The HSISC setting provide backup protection for the circuit breaker. It trips the circuit breaker immediately (<50ms) when the short circuit current exceeds a certain value during normal operation of the circuit breaker. This allows a decrease in the operating time at high short circuit levels possible and it's not affected by the instantaneous protection setting value.

© 2025 NOARK Electric

A32/A40 Series Trip Unit

Product Label

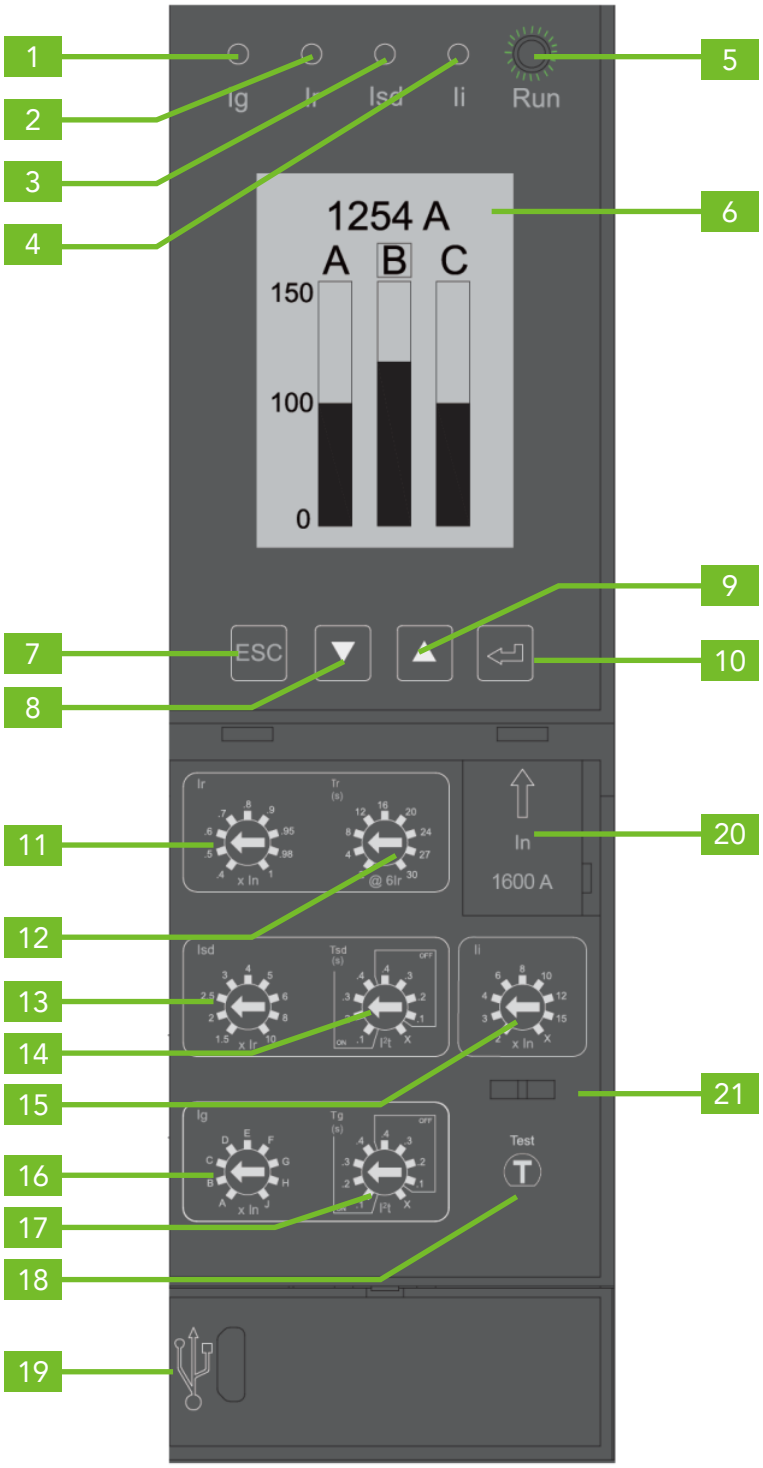

Indicators

1	LED cause of trip indicator (Ig)
2	LED cause of trip indicator (Ir)
3	LED cause of trip indicator (Isd)
4	LED cause of trip indicator (Ii)
5	Running LED indicator
6	Model A and Model H:
	Color LCD display with status indicator
	Green = Normal
	Yellow = Alarm
	Red = Trip
	Model M: Digital LED display

Display Controls

7	Escape button ESC
8	Down selection button
9	Up selection button
10	Enter button

Trip Setting Interface

11	Long time delay current setting (Ir)
12	Long time delay trip time setting (tr)
13	Short time delay current setting (Isd)
14	Short time delay trip time setting (tsd)
15	Instantaneous current setting (Ii)
16	Ground fault current setting (Ig)
17	Ground fault trip time setting (Tg)
18	Trip test button
19	USB port
20	Rating plug
21	Transparent cover lock hook

© 2025 NOARK Electric

A32/A40 Series Trip Unit

Product Selection Guide

SU	30	N	A	12F	M
Trip Unit	**Protection Type**	**Model**	**Control Voltage**	**Series/ Mounting Type**	**Voltage Conversion**
SU	20: LI	NM: LED Display	A: 24Vdc	12F*: A32/A40/Fixed	M*: with VCM10
	30: LSI	NA: LCD Display& Ammeter	C: 100-130Vac	12D*: A32/Drawout	
	40: LSIG	NH: LCD Display& Harmonic Metering	D: 200-240Vac		

Rating Plug Catalog#
IN12N08
IN12N16
IN12N20
IN12N25
IN12N32

* Applicable to only NH-type trip unit

A32/A40 Trip Unit Models Display Options									
Model	LED Trip Indicator	LCD Display	Alarm Indication	Phase Current Display	Arc Flash Maintenance Mode*	Advanced Protection	Advanced Metering	Zone Selective Interlocking	RS485 Communications (Modbus)
M	Y	N	N	N	Y	N	N	N	N
A	Y	Y	Y	Y	Y	N	N	N	N
H	Y	Y	Y	Y	Y	Y	Y	Y	Y

A32/A40 Trip Unit Protection Features			
Type	Protection & Coordination	Setting	Setting Range
Series 2.0 (LI)	Long Delay (L)	Pickup	0.4 to 1.0 x In
		Time	2.0s to 30.0s
	Instantaneous (I)	Pickup	2.0 to 15.0 x @6Ir
Series 3.0 (LSI)	Long Delay (L)	Pickup	0.4 to 1.0 x In
		Time	2.0s to 30.0s
	Short Delay (S)	Pickup	1.5 to 10.0 x @6Ir
		Time	0.1s to 0.4s
			I^2t or Definite Time
	Instantaneous (I)	Pickup	2.0 to 15.0 x In
Series 4.0 (LSIG)	Long Delay (L)	Long Delay Pickup	0.4 to 1.0 x In
		Long Delay Time	2.0s to 30.0s
	Short Delay (S)	Short Delay Pickup	1.5 to 10.0 x @6Ir
		Short Delay Time	0.1s to 0.4s
			I^2t or Definite Time
	Instantaneous (I)	Instantaneous Pickup	2.0 to 15.0 x In
	Ground Fault (G)	Ground Fault Pickup	500A to 1200A
		Ground Fault Time	0.1s to 0.4s
			I^2t or Definite Time

© 2025 NOARK Electric

A32/A40 Series Trip Unit

Trip Unit Products

Standard Trip Unit

Product Family	Protection Type	Control Voltage	NM: LED Display		NA: LCD Display and Ammeter	
			Catalog Number	Part Number	Catalog Number	Part Number
A32/A40 Trip Unit	LI	24Vdc	SU20NMA	1800359	SU20NAA	1800222
		110-130Vac	SU20NMC	1800360	SU20NAC	1800223
		200-240Vac	SU20NMD	1800361	SU20NAD	1800224
	LSI	24Vdc	SU30NMA	1800225	SU30NAA	1800228
		110-130Vac	SU30NMC	1800226	SU30NAC	1800229
		200-240Vac	SU30NMD	1800227	SU30NAD	1800230
	LSIG	24Vdc	SU40NMA	1800231	SU40NAA	1800234
		110-130Vac	SU40NMC	1800232	SU40NAC	1800235
		200-240Vac	SU40NMD	1800233	SU40NAD	1800236

Harmonic Type Trip Unit with VCM10

Product Family	Frame Type	Protection Type	Control Voltage	NH: LCD Display and Harmonic with VCM10	
				Catalog Number	Part Number
A32/A40	Fixed	LI	24Vdc	SU20NHA12FM	1801185
			110-130Vac	SU20NHC12FM	1801186
			208-240Vac	SU20NHD12FM	1801187
		LSI	24Vdc	SU30NHA12FM	1801188
			110-130Vac	SU30NHC12FM	1801189
			208-240Vac	SU30NHD12FM	1801190
		LSIG	24Vdc	SU40NHA12FM	1801191
			110-130Vac	SU40NHC12FM	1801192
			208-240Vac	SU40NHD12FM	1801193
	Drawout	LI	24Vdc	SU20NHA12DM	1801194
			110-130Vac	SU20NHC12DM	1801195
			208-240Vac	SU20NHD12DM	1801196
		LSI	24Vdc	SU30NHA12DM	1801197
			110-130Vac	SU30NHC12DM	1801198
			208-240Vac	SU30NHD12DM	1801199
		LSIG	24Vdc	SU40NHA12DM	1801200
			110-130Vac	SU40NHC12DM	1801201
			208-240Vac	SU40NHD12DM	1801202

Replacement Trip Unit without Voltage module

A standard trip unit device comes with a voltage module or base. Replacement trip unit can be ordered without the voltage module, however the unit must be calibrated by Noark before it can be installed on the field. Please consult your Noark representative for more information.

Product Family	Protection	Type	Number of Pole	Catalog Number	Part Number
A32/A40 Trip Unit	LSIG	M - LED Display	3	SU12N403M	1800566
			4	SU12N404M	1800567
		A - LCD display and Ammeter	3	SU12N403A	1800568
			4	SU12N404A	1800569
		H - LCD display and Harmonics	3	SU12N403H	1800570
			4	SU12N404H	1800571

© 2025 NOARK Electric

A32/A40 Series Trip Unit

Technical Specifications

Functions	Model M	Model A	Model H
Protection functions			
Long time	•	•	•
Overload pre-alarm	•	•	•
Short time	•	•	•
Instantaneous	•	•	•
Neutral (4-pole only)	•	•	•
Ground-fault	•	•	•
Current unbalance	•	•	•
Voltage unbalance			•
Overvoltage protection			•
Undervoltage protection			•
Over-frequency			•
Under-frequency			•
Phase sequence			•
Reverse active power			•
Demand value			•
Total Harmonics Distortion			•
Thermal memory	•	•	•
Measurement functions			
Current	•	•	•
Voltage			•
Frequency			•
Power			•
Power factor			•
Ammeter and kilowatt hours			•
Average Demand			•
Total Harmonics Distortion			•
Maintenance function			
Trip records	•	•	•
Alarm records	•	•	•
Operations records	•	•	•
Contact wear records		•	•
Load monitoring			•
Zone Selective Interlocking			•
Arc reduction	•	•	•
Energy limiting Maintenance Remote Switch			•
Test Button	•	•	•
Other functions			
RS485 communication function			•
Digital input/output DI/DO			•
Real time clock		•	•
LED display	•		
Color LCD Display		•	•

© 2025 NOARK Electric

A32/A40 Series Trip Unit

Technical Specifications

Protection Functions and Settings

Long Delay protection (L)									
Ir - Long Delay Pickup dial setting (multiples of In)	0.40	0.50	0.60	0.70	0.80	0.90	1.0	Tolerance = ±10%	
Tr - Long Delay Time dial setting (s)	2	4	8	12	16	20	24	27	30
Long Delay Trip Times (s)									
t @1.2 x Ir	< 1h								
t @2.0 x Ir	18	36	72	108	114	180	216	243	270
t @6.0 x Ir	2	4	8	12	16	20	24	27	30
Long time delay inverse time characteristics, $t = \frac{(6Ir)^2}{i^2} \times Tr$									
In = Rating plug value, Tr = Long time delay time, Ir = Long time delay current, i = Short circuit current Tolerance = ±40ms or ±10% whichever is greater									

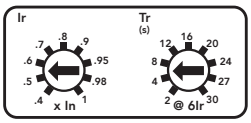

Short Delay protection (S)

Isd - Short Delay Pickup dial setting (multiples of In)	1.5	2	2.5	3	4	5	6	8	10	Tolerance = ±10%
Tsd - Short Delay Time dial setting (s)	I^2t ON				I^2t OFF				X	Tolerance = ±40ms or ±10% whichever is greater
	0.1	0.2	0.3	0.4	0.4	0.3	0.2	0.1		

Short Delay Trip Times

Dial Range	Current Value	Trip Time (s)			
I^2t OFF	< 0.9 x Isd	No Trip			
	> 1.1 x Isd	0.4	0.3	0.2	0.1
I^2t ON	< 0.9 x Isd	No Trip			
	≥1.1 x Isd to ≥10 x Ir	Inverse Time			
	>10 x Ir	0.1	0.2	0.3	0.4
X	Short Delay protection OFF				

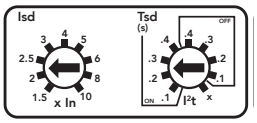

Instantaneous protection (I)

Instantaneous current Ii pickup setting (multiples of Ir)	2	3	4	6	8	10	12	15	X	Tolerance ±10%

Instantaneous Trip Times

Current Value	Trip Time (s)
< 0.9 x Ii	No Trip
≥1.1 x Ii	Trip time≥100ms
X = Instantaneous protection OFF	

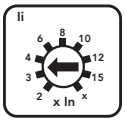

© 2025 NOARK Electric

A32/A40 Series Trip Unit

Technical Specifications

Protection Functions and Settings											
Ground Fault protection (G)											
Ig – Ground Fault Pickup dial setting											
	Dial Position	A	B	C	D	E	F	G	H	J	Tolerance = ±10%
	400A <In and ≤1200A	0.2	0.3	0.4	0.5	0.6	0.7	0.8	0.9	1.0	
	In > 1200	500A	640A	720A	800A	880A	960A	1040A	1120A	1200A	
Tg – Ground Fault Delay Time dial setting (s)		I^2t ON					I^2t OFF			X	Tolerance = ±40ms or ±10% whichever is greater
		0.1	0.2	0.3	0.4	0.4	0.3	0.2	0.1		

Ground Fault Trip Times

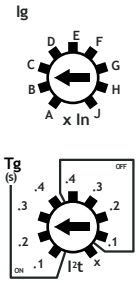

Dial Range	Ground Current Value	Trip Time (s)				
I^2t OFF (s)	<0.9 x Ig >1.1 x Ig	No Trip				In = Rating plug value Ig = Ground Fault Pickup Tg = Ground Fault Time Delay ig = Ground Current
		0.4	0.3	0.2	0.1	
I^2t ON (s)	<0.9 x Ig	No Trip				
	≥1.1x Ig or (ig<In and ig<1200A)	$t = \frac{(1.0In)^2 xTg}{ig^2}$ or $t = \frac{(1200)^2 x Tg}{ig^2}$				
X	Ground Fault protection OFF					

Optional Settings – Model H Only				
Function	Parameter	Min	Max	Step
Over Voltage	Pickup	100V	1200V	1V
	Pickup Delay	0.2s	60s	0.1s
	Drop Out	0.2In	Pickup	1V
	Drop Out Delay	0.2s	60s	0.1s
Under Voltage	Pickup	100V	1200V	1V
	Pickup Delay	0.2s	60s	0.1s
	Drop Out	Pickup	Pickup~1200V	1V
	Drop Out Delay	0.2s	60s	0.1s
Voltage Unbalance	Pickup	2%	30%	1%
	Pickup Delay	0.2s	60s	0.1s
	Drop Out	2%	Pickup	1%
	Drop Out Delay	0.2s	60s	0.1s
Current Unbalance	Pickup	5%	60%	1%
	Pickup Delay	0.1s	40s	0.1s
	Drop Out	5%	Pickup	1%
	Drop Out Delay	10s	200s	1s

© 2025 NOARK Electric

A32/A40 Series Trip Unit

Technical Specifications

Optional Settings – Model H Only (continued)				
Function	Parameter	Min	Max	Step
Demand Unbalance	Pickup	0.2In	In	1A
	Pickup Delay	15s	1500s	1s
	Drop Out	0.2In	Pickup setting	1A
	Drop Out Delay	15s	3000s	1s
Total Harmonic Distortion (Current)	Pickup	8%	60%	0.5%
	Pickup Delay	1s	120s	1s
	Drop Out	8%	Pickup setting	0.5%
	Drop Out Delay	1s	120s	1s
Total Harmonic Distortion (Voltage)	Pickup	4%	10%	0.1%
	Pickup Delay	1s	120s	1s
	Drop Out	4%	Pickup setting	0.1%
	Drop Out Delay	1s	120s	1s
Load Shedding Method 1 (Control two branch loads independently)	Load 1 Pickup	0.2Ir	1.0Ir	1A
	Load 1 Pickup Delay	20%Tr	80%Tr	1%Tr
	Load 2 Pickup	0.2Ir	1.0Ir	1A
	Load 2 Pickup Delay	20%Tr	80%Tr	1%Tr
Load Shedding Method 2 (Control one branch load)	Pickup	0.2Ir	1.0Ir	1A
	Pickup Delay	20%Tr	80%Tr	1%Tr
	Drop Out	0.2Ir	Pickup setting	1A
	Drop Out Delay	10s	600s	1s
Under Frequency	Pickup	45Hz	65Hz	0.5Hz
	Pickup Delay	0.2s	5s	0.1s
	Drop Out	Start setting	65Hz	0.5Hz
	Drop Out Delay	0.2s	36s	0.1s
Over Frequency	Pickup	45Hz	65Hz	0.5Hz
	Pickup Delay	0.2s	5s	0.1s
	Drop Out	45Hz	65Hz	0.5Hz
	Drop Out Delay	0.2s	36s	0.1s
Reverse Active Power	Pickup	5KW	500KW	1V
	Pickup Delay	0.2s	20s	0.1s
	Drop Out	5KW	Pickup setting	1V
	Drop Out Delay	1s	36s	0.1s
Phase Sequence	Settings: ABC or ACB Instantaneous Trip			

© 2025 NOARK Electric

A32/A40 Series Trip Unit

Trip Curves

Selective Protection LSI

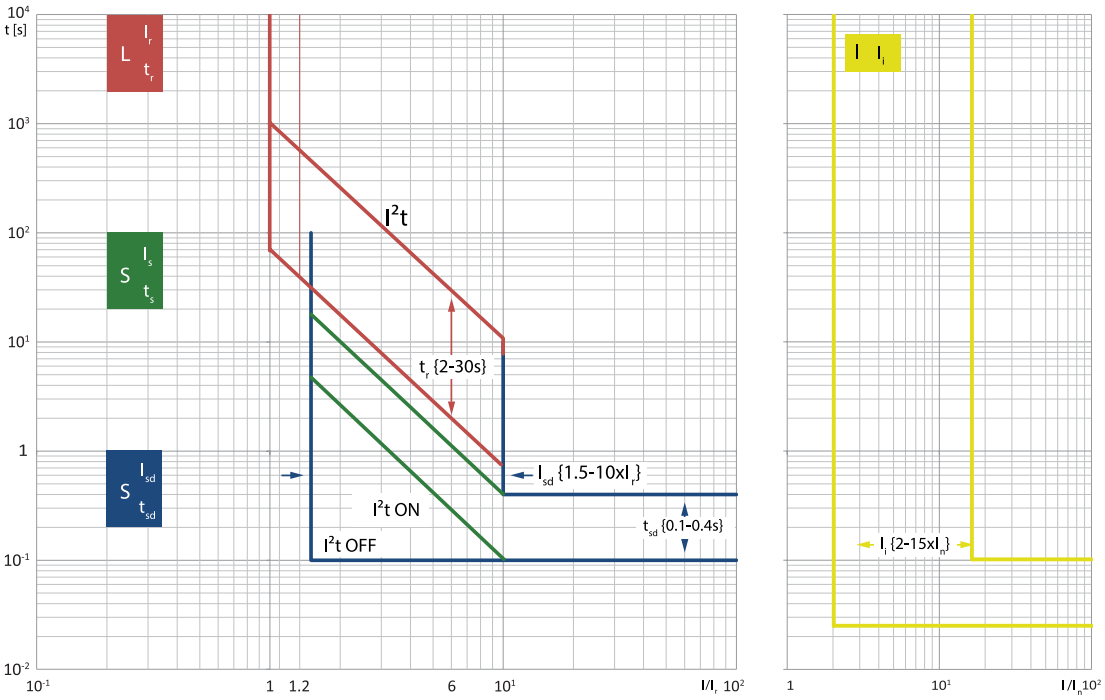

Ground Protection Curve

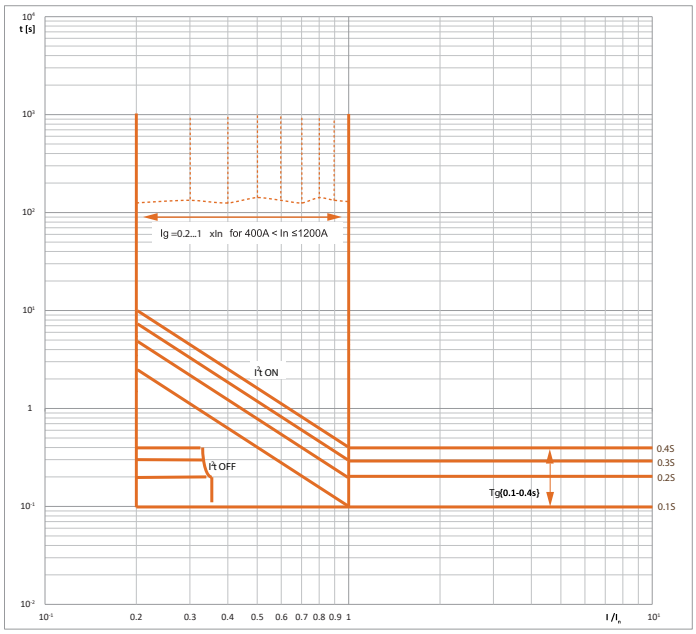

(400A＜In≤1200A)
Setting range of G protection curve

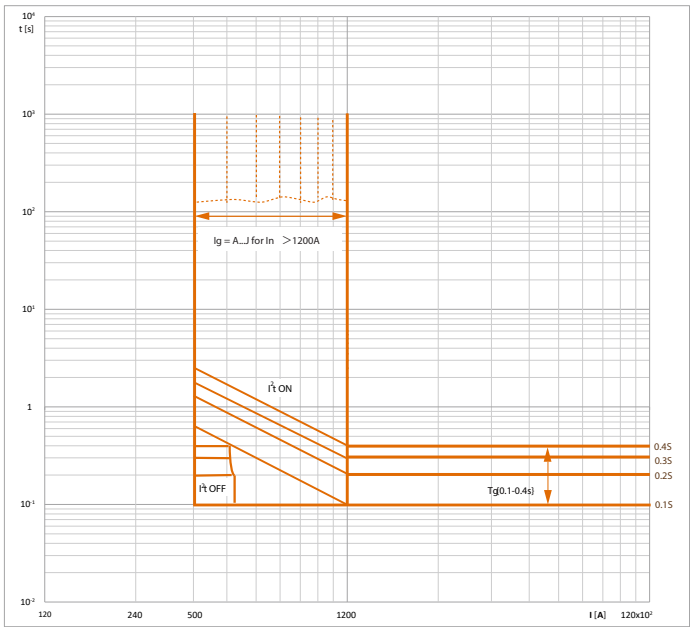

(In＞1200A)
Setting range of G protection curve

© 2025 NOARK Electric

A32/A40 Series Accessories

Electrical

Shunt Release: A32/A40

Opens the breaker instantaneously when the coil is energized by a voltage input

Shunt Trip Release			Field Installable		
Catalog Number	Part Number	Control Voltage	Inrush/Continuous Power Consumption (W or VA)	Operational Volitage Range (70–110%)	Operating Time (ms)
SHT12NA	1800272	24~30Vdc	500 / 4.5	17~33Vdc	≤50
SHT12NB	1800273	48~60Vac/dc	500 / 4.5	34~66Vac/dc	≤50
SHT12NC	1800274	110~130Vac/dc	500 / 4.5	77~143Vac/dc	≤50
SHT12ND	1800275	200~240Vac/dc	500 / 4.5	140~264Vac/dc	≤50
SHT12NE	1800447	380~440Vac	500 / 4.5	266~484Vac	≤50

Closing Release: A32/A40

Remotely closes the circuit breaker when the coil is energized by a voltage input

Closing Release			Field Installable		
Catalog Number	Part Number	Control Voltage	Inrush/Continuous Power Consumption (W or VA)	Operational Volitage Range (70–110%)	Operating Time (ms)
XF12NA	1800264	24~30Vdc	500 / 4.5	17~33Vdc	≤70
XF12NB	1800265	48~60Vac/dc	500 / 4.5	34~66Vac/dc	≤70
XF12NC	1800266	110~130Vac/dc	500 / 4.5	77~143Vac/dc	≤70
XF12ND	1800267	200~240Vac/dc	500 / 4.5	140~264Vac/dc	≤70
XF12NE	1800445	380~440Vac	500 / 4.5	266~484Vac	≤70

Undervoltage Release: A32/A40

Opens the breaker when the supply voltage falls to 30–60% of rated voltage. If the release is not energized to 85% of its supply voltage, the circuit breaker cannot be closed electrically or manually.

Undervoltage Release			Field Installable			
Catalog Number	Part Number	Control Voltage	Inrush/Continuous Power Consumption (W or VA)	Operational Volitage Range (85–110%)	Dropout Voltage (30–60%)	Operating Time (ms)
UVT12NA	1800281	24~30Vdc	500 / 4.5	20~33Vdc	7~18 Vdc	≤70
UVT12NB	1800282	48~60Vac/dc	500 / 4.5	41~66Vac/dc	14~36 Vdc	≤70
UVT12NC	1800283	110~130Vac/dc	500 / 4.5	94~143Vac/dc	33~78Vac/Vdc	≤70
UVT12ND	1800284	200~240Vac/dc	500 / 4.5	170~264Vac/dc	60~144Vac/Vdc	≤70
UVT12NE	1800285	380~440Vac	500 / 4.5	323~484Vac	114~264Vac	≤70

© 2025 NOARK Electric

A32/A40 Series Accessories

Electrical

Auxiliary Contact: A32/A40

Monitors ON/OFF status of the circuit breaker or non-automatic switch and provides contacts to electrically indicate its position remotely. Contact configurations: 44: 4NO and 4NC; 66: 6NO and 6NC; 44C: 4 Form C; 66C: 6 Form C

Auxiliary Contact		Field Installable		
Frame Size	Breaker/Switch	Contacts	Catalog Number	Part Number
A32/ASD32 A40/ASD40	Fixed	4NO+4NC	AX12NF44	1800290
		6NO+6NC	AX12NF66	1800291
		4NO/NC	AX12NF44C	1800292
		6NO/NC	AX12NF66C	1800293
	Drawout	4NO+4NC	AX12ND44	1800298
		6NO+6NC	AX12ND66	1800299
		4NO/NC	AX12ND44C	1800300
		6NO/NC	AX12ND66C	1800301

Voltage (V)		Rated Current (A)
AC	240	5
	480	2
DC	110	0.25
	220	0.25

Position Indicator: A32

Indicates the position of the breaker-connected, testing, disconnected. For drawout type devices only. 3 CO Form C contacts, one contact for each breaker position. Connected to secondary terminals #58, 59, 60 (Connected), #61, 62, 63 (Test), #64, 65, 66 (Disconnected). Factory installed only. In the scope of delivery there are additional secondary terminals #58-66

Position Indicator	Factory Installable	
Frame Size	Catalog Number	Part Number
A32/ASD32	+EF12N	1800302

© 2025 NOARK Electric

A32/A40 Series Accessories

Electrical

Voltage Conversion Module: A32/A40

The Voltage conversion module VCM10 is used to pick up the Power Circuit voltage signal and reduce the voltage to safe levels on the secondary terminals of the breaker. VCM10 is selected by default if the H-type control unit has been selected and the voltage protection is enabled.

Description	VCM10
Voltage input	0~1500Vac
Power consumption	<1W
Installation	35mm Din-rail
Applicable Trip unit	H
Applicable Software version	0.92 or higher

Field Installable					
Product	Part Number	Frame Size	Poles	Breaker	Rated Current
+VCM10	1800488	A32/A40	3P/4P	Fixed/Drawout	800~4000A

Rear Terminal Connectors: A32/A40

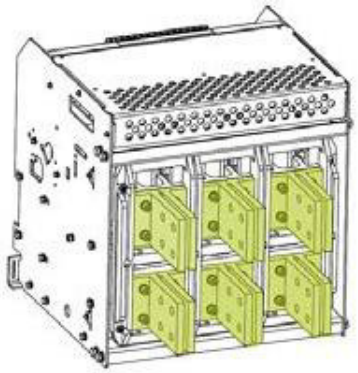

Rear Terminal Connectors			Field Installable		
Frame Size	Poles	Breaker/Switch	Rated Current	Product	Part Number
A32/ASD32	3P	Fixed	800A/1600A	RCP12N3F1600	1800340
		Fixed	2000A/2500A	RCP12N3F2500	1800341
		Fixed	3200A	RCP12N3F3200	1800462
		Withdrawable	800A/1600A	RCP12N3D1600	1800342
		Withdrawable	2000A/2500A	RCP12N3D2500	1800343
		Withdrawable	3200A	RCP12N3D3200	1800344
	4P	Fixed	800A/1600A	RCP12N4F1600	1800345
		Fixed	2000A/2500A	RCP12N4F2500	1800346
		Fixed	3200A	RCP12N4F3200	1800463
		Withdrawable	800A/1600A	RCP12N4D1600	1800347
		Withdrawable	2000A/2500A	RCP12N4D2500	1800348
		Withdrawable	3200A	RCP12N4D3200	1800349
A40/ASD40	3P	Fixed	4000A	RCP13N3F4000	1800489
	4P			RCP13N4F4000	1800490

Note: This item is included with every new A32/A40 Breaker. Renewal part only

© 2025 NOARK Electric

A32/A40 Series Accessories

Electrical

External current sensor for Neutral: A32/A40

An external sensor for ground fault protection of three-pole circuit breakers in four-wire network, installed on the neutral conductor, the current sensor enables ground fault protection. A neutral sensor must be ordered with any LSIG trip unit.

		Field Installable
Frame Size	Catalog Number	Part Number
A32/A40	+NCT12N	1800378

Note: External neutral protection for three-pole breaker only

External current sensor for Neutral: A32/A40

An external sensor for ground fault protection of three-pole circuit breakers in four-wire network, installed on the neutral conductor, the current sensor enables ground fault protection. A neutral sensor must be ordered with any LSIG trip unit.
(The function is same to NCT12N)

Description	RCT1800
Rated primary current	Up to 15000 Amp
Accuracy	±2.5%
Temperatures	Operating: -15°C to 65°C
	Storage: -45°C to 80°C
Humidity rating	85%
Weight	0.34lbs (0.15Kg)
Length of wire	8FT (2.43m)
Coil diameter	6in (152mm)

			Field Installable Only	
Frame Size	Poles	Breaker	Catalog Number	Part Number
A32/A40	3P/4P	Fixed/Drawout	+RCT-1800-COIL 12	1800564

Motor Operator: A32/A40

Charges the closing spring of mechanism when the circuit breaker is closed. Factory installed only. Mechanical charging handle can be used with or without power supply. Equipped with a limit switch contact which signals that spring is charged.

Motor Operator			Field Installable		
Catalog Number	Part Number	Control Voltage	Inrush/Continuous Power Consumption (W or VA)	Operational Volitage Range (85–110%)	Charging time (s)
MD12NA	1800308	24~30Vdc	800 / 200	20~33Vdc	≤4
MD12NB	1800309	48~60Vac/dc	1200 / 200	41~66Vac/dc	≤4
MD12NC	1800310	110~130Vac/dc	1800 / 180	94~143Vac/dc	≤4
MD12ND	1800311	208~240Vac/dc	1800 / 180	177~264Vac/dc	≤4
MD12NE	1801130	380-440Vac	1800 / 180	323~484Vac	≤4

© 2025 NOARK Electric

A32/A40 Series Accessories

Electrical

Ready To Close Contact: A32/A40

This device is intended to be installed in A32/A40 series power circuit breaker depending on customer's requirements. It is used to indicate whether the operating mechanism can be closed.

	Factory Installable	
Frame Size	Catalog Number	Part Number
A32/ASD32 A40/ASD40	+PF12N	1800312

Energy-limiting maintenance switch: A32/A40

ELM10 is used to mitigate arc hazards and protect personal safety during product maintenance. It should be used in coordination with Air Circuit Breakers with arc reduction. While the Energy limiting function can be set and turned on in all trip unit models (M, A & H), the ELM10 is programmable only with the Harmonic 'H' version trip unit and the applicable software should be 0.91 or higher.

Description	ELM10
Ambient temp (°C)	-20°C+70°C
Rated voltage Ue (V)	AC480V/DC24
Rated frequency (Hz)	50/60
Enclosure protection class	IP40
Electrical/mechanical endurance (times)	1500
Inrush/Continuous Power Consumption (W)	≤5W

	Field Installable	
Frame Size	Catalog Number	Part Number
A32/A40	ELM10	1800448

© 2025 NOARK Electric

A32/A40 Series Accessories

Mechanical

Door Frame: A32/A40

IP40 Protection.

IP40 Door Frame Doorframes for Fixed Type		Field Installable	
Frame Size	Breaker/Switch	Catalog Number	Part Number
A32/ASD32	Fixed	CDP12N	1800324
A40/ASD40*	Drawout	DDP12N	1800323

Note: This item is included with every new A32 or A40 Breaker. Renewal part only.

*A40/ASD40: available only in fixed version.

Pushbutton Locking Cover: A32/A40

Prevents access to the control push buttons of the breaker. Factory installed only. Lock is not included.

Plastic

Metal

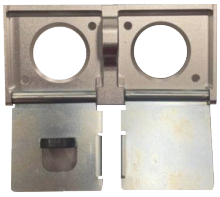

		Factory Installable	
Material	Frame Size	Catalog Number	Part Number
Plastic	A32/ASD32, A40/ASD40	+VBP12N	1800314
Metal	A32/ASD32	+VBP12NM	1800573

Phase Barriers: A32/A40

Provides improved isolation between the terminal connectors on the back of the breaker or cassette.

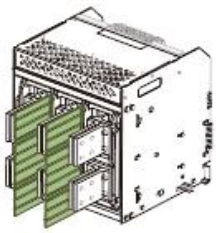

Phase Barrier			Field Installable Only		
Frame Size	Breaker/Switch	Rated Current	Quantity*	Catalog Number	Part Number
A32/ASD32	Fixed	800A~2500A	2 pcs for 3-pole	PHS12N2	1800334
		3200A	4 pcs for 3-pole	PHS12N4	1800530
	Drawout	800A~2500A	2 pcs for 3-pole	DPS12N2	1800336
		3200A	4 pcs for 3-pole	DPS12N4	1800532
A40/ASD40	Fixed	4000A	4 pcs for 3-pole	PHS12N4	1800530

* 2 pcs of PHS is required for line and load sides of 3P 800A~2500A ratings.

4 pcs of PHS is required for line and load sides of 3P 3200A and 4000A rating.

© 2025 NOARK Electric

A32/A40 Series Accessories

Mechanical

Mechanical Interlocking with Cables: A32/A40

Cable-connected mechanical interlock mechanism that is used to prevent two interlocked breakers from closing at the same time. interlocking of 2 or 3 (in preparation) breakers. Cable length for Maximum distance between mounting positions of the interlocks is 78in (2m). Suitable for A32/A40 Power circuit breaker and Non-automatic switches.
2 interlocks and 2 cables (2 breakers version), 3 interlocks and 6 cables (3 breakers version)

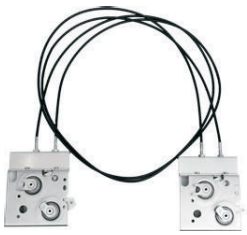

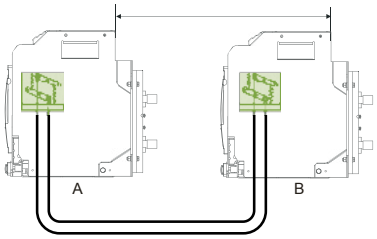

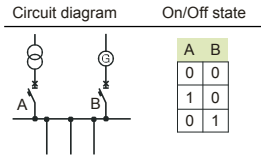

Mechanical Interlocks with Cables		Factory Installable
Frame Size	**Catalog Number**	**Part Number**
A32/ASD32 A40/ASD40	IPA12N	1800339

Door Interlock: A32

Ensures that the door or cover of distribution board the breaker compartment cannot be opened when the circuit breaker is closed or in its test position.

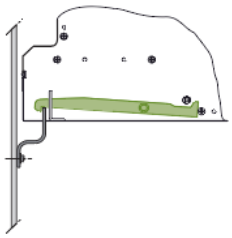

Door Interlocks for Drawout Type		Factory Installable	
Frame Size	**Interlock Type**	**Catalog Number**	
A32/ASD32	Position Interlock	+VPEC12NP	1800339

OFF Position Keylock Operated Lock

For A32/A40 Power circuit breaker and non-automatic switch. Locks the breaker in the OFF position to ensure the breaker cannot be closed. One circuit breaker is provided with one lock and one key. Two circuit breakers are provided with two locks and one key. Three circuit breakers are provided with three locks and two keys.

		Field installable	
Frame Size	**Configuration**	**Catalog Number**	**Part Number**
A32/ASD32 A40/ASD40	1 lock 1 key	KLK12N1	1800319
	2 locks 1 key	KLK12N2	1800320
	3 locks 2 keys	KLK12N3	1800321

Kirk key Interlock kit

The interlock kit is compatible with Kirk key Type C Interlock device with part number - KCAM00010

Item number	Product name	Description
1801113	KKC12N	Kirk key Type C interlock kit for UL A32/A40 ACB, loose supply

© 2025 NOARK Electric

A25 Series Products Selection Guide

Appendix I

Required – Frame and Trip Unit

Select the catalog number segments from the list to create complete catalog numbers for the frame and for the trip unit.

Description			Catalog Number	
			A25	ASD25
Frame Selection	**Step 1** Frame Type	2500A Disconnect Switch		
		2500A Breaker		
	Step 2 Interrupting Rating @847V	65kA	Q	Q
		75kA	R	R
		85kA	H	H
	Step 3 Poles	3-pole	3	3
		4-pole	4	4
	Step 4 Mounting	Fixed	F	F
		Drawout (Cassette included with Frame)	D*	D*
	Step 5 Terminal Orientation	Vertical	V	V
		Horizontal	H**	H**
	Step 6 Ampacity	600A	600	600
		800A	800	800
		1200A	1200	1200
		1600A	1600	1600
		2000A	2000	2000
		2500A	2500	2500
Trip Unit Selection	**Step 1** Protection Type	LI	SU20	
		LSI	SU30	
		LSIG	SU40	
	Step 2 Display Type	LED - Basic	NM	
		LCD - Ammeter	NA	
		LCD - Harmonics	NH	
		24~30Vdc - Drawout	A11D	
		24~30Vdc - Fixed	A11F	
		110~130Vac - Drawout	C11D	
		110~130Vac - Fixed	C11F	
		200~240Vac - Drawout	D11D	
		200~240Vac - Fixed	D11F	

A complete breaker requires the specification of a frame and a trip unit. Select one catalog number segment from each step to create complete catalog numbers for each component. Disconnect switches do not have protection features and do not require a trip unit.

* Drawout version - 2000A max.
** Horizontal terminal - 2000A max.

© 2025 NOARK Electric

A25 Series Products Selection Guide

Appendix I

Optional – Electrical Accessories:
Select the complete catalog number for any electrical accessories required for the application.

Description			Catalog Number Segment		
			A25	ASD25	
Electrical Operation Accessories Selection	Auxiliary Contacts	Auxiliary Contact - Fixed - 4NO & 4NC	AX12NF44	AX12NF44	Select from these accessories to make an electrically operated breaker: 1. Motor operator charges breaker springs automatically. 2. Shunt Trip opens the breaker from an outside electrical signal. 3. Undervoltage Release opens the breaker when the voltage supplied to it drops below a set point. 4. Closing Release closes the breaker from an outside electrical signal.
		Auxiliary Contact - Fixed - 4 Form C	AX12NF44C	AX12NF44C	
		Auxiliary Contact - Fixed - 6NO & 6NC	AX12NF66	AX12NF66	
		Auxiliary Contact - Fixed - 6 Form C	AX12NF66C	AX12NF66C	
		Auxiliary Contact - Drawout - 4NO & 4NC	AX12ND44	AX12ND44	
		Auxiliary Contact - Drawout - 4 Form C	AX12ND44C	AX12ND44C	
		Auxiliary Contact - Drawout - 6NO & 6NC	AX12ND66	AX12ND66	
		Auxiliary Contact - Drawout - 6 Form C	AX12ND66C	AX12ND66C	
	Motor Operator	Motor Operator - Fixed - 24~30Vdc	MD11NAF	MD11NAF	
		Motor Operator - Fixed - 48~60Vac/dc	MD11NBF	MD11NBF	
		Motor Operator - Fixed - 110~130Vac/dc	MD11NCF	MD11NCF	
		Motor Operator - Fixed - 208~240Vac/dc	MD11NDF	MD11NDF	
		Motor Operator - Fixed - 380~440Vac	MD11NEF	MD11NEF	
		Motor Operator - Drawout - 24~30Vdc	MD11NAD	MD11NAD	
		Motor Operator - Drawout - 48~60Vdc	MD11NBD	MD11NBD	
		Motor Operator - Drawout - 110~130Vac	MD11NCD	MD11NCD	
		Motor Operator - Drawout - 200~240Vac	MD11NDD	MD11NDD	
		Motor Operator - Drawout - 380~440Vac	MD11NED	MD11NED	
	Shunt Release	Shunt Trip Release- Fixed - 24~30Vdc	SHT11NAF	SHT11NAF	
		Shunt Trip Release - Fixed - 48~60Vac/dc	SHT11NBF	SHT11NBF	
		Shunt Trip Release - Fixed - 110~130Vac/dc	SHT11NCF	SHT11NCF	
		Shunt Trip Release - Fixed - 208~240Vac/dc	SHT11NDF	SHT11NDF	
		Shunt Trip Release - Fixed - 380~440Vac	SHT11NEF	SHT11NEF	
		Shunt Trip Release - Drawout - 24~30Vdc	SHT11NAD	SHT11NAD	
		Shunt Trip Release - Drawout - 48~60Vac/dc	SHT11NBD	SHT11NBD	
		Shunt Trip Release - Drawout - 110~130Vac/dc	SHT11NCD	SHT11NCD	
		Shunt Trip Release - Drawout - 208~240Vac/dc	SHT11NDD	SHT11NDD	
		Shunt Trip Release - Drawout - 380~440Vac	SHT11NED	SHT11NED	
	Undervoltage Release	Undervoltage Release - Fixed - 24~30Vdc	UVT11NAF	UVT11NAF	
		Undervoltage Release - Fixed - 48~60Vac/dc	UVT11NBF	UVT11NBF	
		Undervoltage Release - Fixed - 110~130Vac/dc	UVT11NCF	UVT11NCF	
		Undervoltage Release - Fixed - 208~240Vac/dc	UVT11NDF	UVT11NDF	
		Undervoltage Release - Fixed - 380~440Vac	UVT11NEF	UVT11NEF	
		Undervoltage Release - Drawout - 24~30Vdc	UVT11NAD	UVT11NAD	
		Undervoltage Release - Drawout - 48~60Vac/dc	UVT11NBD	UVT11NBD	
		Undervoltage Release - Drawout - 110~130Vac/dc	UVT11NCD	UVT11NCD	
		Undervoltage Release - Drawout - 208~240Vac/dc	UVT11NDD	UVT11NDD	
		Undervoltage Release - Drawout - 380~440Vac	UVT11NED	UVT11NED	
	Closing Release	Closing Release- Fixed - 24~30Vdc	XF11NAF	XF11NAF	
		Closing Release - Fixed - 48~60Vac/dc	XF11NBF	XF11NBF	
		Closing Release - Fixed - 110~130Vac/dc	XF11NCF	XF11NCF	
		Closing Release - Fixed - 208~240Vac/dc	XF11NDF	XF11NDF	
		Closing Release - Fixed - 380~440Vac	XF11NEF	XF11NEF	
		Closing Release - Drawout - 24~30Vdc	XF11NAD	XF11NAD	
		Closing Release - Drawout - 48~60Vac/dc	XF11NBD	XF11NBD	
		Closing Release - Drawout - 110~130Vac/dc	XF11NCD	XF11NCD	
		Closing Release - Drawout - 208~240Vac/dc	XF11NDD	XF11NDD	
		Closing Release - Drawout - 380~440Vac	XF11NED	XF11NED	

© 2025 NOARK Electric

A25 Series Products Selection Guide

Appendix I

Optional – Electrical Accessories:

Select the complete catalog number for any electrical accessories required for the application

Description			Catalog Number		
			A25	ASD25	
Electrical Operation Accessories Selection	Others	Breaker Position Contacts (Drawout Only)	EF11N	EF11N	Neutral Current Sensor is used only with LSIG (SU40) trip units installed. ELM10 and VCM10 are used only with Harmonics version Trip Unit installed.
		Ready-to-Close signal contact - Fixed	PF11NF	PF11NF	
		Ready-to-Close signal contact - Drawout	PF11ND	PF11ND	
		Neutral Current Sensor (SU40 TU Only)	NCT11N	-	
		Cable Type Neutral Current Sensor (SU40 TU Only)	RCT-1800-COIL 11		
		Voltage Conversion Module (800Vac Systems only)	VCM10		
		Energy Limiting Maintenance Switch	ELM10		

Optional - Mechanical Accessories:

Select the complete catalog number for any mechanical accessories required for the application.

Description			Catalog Number Segment		
			A25	ASD25	
Mechanical Accessories Selection	Locking provisions	Lock - 1 Lock/1Key	KLK12N1	KLK12N1	Select from these accessories for locking provisions, phase barriers and interlocks
		Lock - 2 Locks/1Key	KLK12N2	KLK12N2	
		Lock - 3 Locks/2Keys	KLK12N3	KLK12N3	
		Padlock Hasp - Plastic	VBP12N	VBP12N	
		Padlock Hasp - Metal	VBP11NM	VBP11NM	
	Door Frame	Door Frame - Fixed	CDP11N	CDP11N	
		Door Frame - D/O	DDP11N	DDP11N	
	Phase barrier	Phase Barrier - D/O - 3P (600A~2500A)	DPS12N2	DPS12N2	
		Phase Barrier - D/O - 4P (600A~2500A)	DPS12N3	DPS12N3	
		Phase Barrier - Fixed - 3P (600A~2500A)	PHS12N2	PHS12N2	
		Phase Barrier - Fixed - 4P (600A~2500A)	PHS12N3	PHS12N3	
	Interlocks	Mechanical Interlock (2 Breaker-Cable)	IPA12N	IPA12N	
		Door Position Interlock - D/O	VPEC11NP	VPEC11NP	
		Status Interlock	VPEC11NS	VPEC11NS	

© 2025 NOARK Electric

A32 Series Products Selection Guide

Appendix II

Required: - Frame and Trip Unit

Select the catalog number segments from the list to create complete catalog numbers for the frame and for the trip unit.

Description				Catalog Number	
Frame Selection	Step 1	Frame Type	3200A Disconnect Switch		
			3200A Breaker		
				A32	**ASD32**
	Step 2	Interrupting Rating @635V	65kA	Q	Q
			85kA	R	R
			100kA	H	H
	Step 3	Poles	3-pole	3	3
			4-pole	4	4
	Step 4	Mounting	Fixed	F	F
			Drawout (Cassette included with Frame)	D	D
	Step 5	Terminal Orientation	Vertical	V	V
			Horizontal	H*	H*
	Step 6	Ampacity	800A	800	800
			1600A	1600	1600
			2000A	2000	2000
			2500A	2500	2500
			3200A	3200	3200
Trip Unit Selection	Step 1	Protection Type	LI	SU20	-
			LSI	SU30	
			LSIG	SU40	
	Step 2	Display Type	LED - Basic	NM	
			LCD - Ammeter	NA	
			LCD - Harmonics	NH	
	Step 3	Control Voltage	24Vdc	A	
			110~130Vac	C	
			208~240Vac	D	

A complete breaker requires the specification of a frame and a trip unit. Select one catalog number segment from each step to create complete catalog numbers for each component. Disconnect switches do not have protection features and do not require a trip unit.

* Horizontal terminal - 2500A max.

© 2025 NOARK Electric

A32 Series Products Selection Guide

Appendix II

Optional – Electrical Accessories:

Select the complete catalog number for any electrical accessories required for the application

Description			Catalog Number		
			A32	ASD32	
Electrical Operation Accessories Selection	Auxiliary Contacts	Auxiliary Contact - Fixed - 4NO & 4NC	AX12NF44	AX12NF44	Select from these accessories to make an electrically operated breaker: 1. Motor operator charges breaker springs automatically. 2. Shunt Trip opens the breaker from an outside electrical signal. 3. Undervoltage Release opens the breaker when the voltage supplied to it drops below a set point. 4. Closing Release closes the breaker from an outside electrical signal.
		Auxiliary Contact - Fixed - 4 Form C	AX12NF44C	AX12NF44C	
		Auxiliary Contact - Fixed - 6NO & 6NC	AX12NF66	AX12NF66	
		Auxiliary Contact - Fixed - 6 Form C	AX12NF66C	AX12NF66C	
		Auxiliary Contact - Drawout - 4NO & 4NC	AX12ND44	AX12ND44	
		Auxiliary Contact - Drawout - 4 Form C	AX12ND44C	AX12ND44C	
		Auxiliary Contact - Drawout - 6NO & 6NC	AX12ND66	AX12ND66	
		Auxiliary Contact - Drawout - 6 Form C	AX12ND66C	AX12ND66C	
	Motor Operator	Motor Operator - 24~30Vdc	MD12NA	MD12NA	
		Motor Operator - 48~60Vdc	MD12NB	MD12NB	
		Motor Operator - 110~130Vac	MD12NC	MD12NC	
		Motor Operator - 208~240Vac	MD12ND	MD12ND	
	Shunt Release	Shunt Trip Release - 24~30Vdc	SHT12NA	SHT12NA	
		Shunt Trip Release - 48~60Vdc	SHT12NB	SHT12NB	
		Shunt Trip Release - 110~130Vac	SHT12NC	SHT12NC	
		Shunt Trip Release - 208~240Vac	SHT12ND	SHT12ND	
	Undervoltage Release	Undervoltage Release - 24Vdc	UVT12NA	UVT12NA	
		Undervoltage Release - 48Vdc	UVT12NB	UVT12NB	
		Undervoltage Release - 110~130Vac	UVT12NC	UVT12NC	
		Undervoltage Release - 208~240Vac	UVT12ND	UVT12ND	
		Undervoltage Release - 380/440Vac	UVT12NE	UVT12NE	
	Closing Release	Closing Release - 24~30Vdc	XF12NA	XF12NA	
		Closing Release - 48~60Vdc	XF12NB	XF12NB	
		Closing Release - 110~130Vac	XF12NC	XF12NC	
		Closing Release - 208~240Vac	XF12ND	XF12ND	
	Others	Breaker Position Contacts (Drawout Only)	EF12N	EF12N	Neutral Current Sensor is used only with LSIG (SU40) trip units installed. ELM10 and VCM10 are used only with Harmonics version Trip Unit installed.
		Ready-to-Close Signal Contact	PF12N	PF12N	
		Neutral Current Sensor (SU40 TU Only)	NCT12N	-	
		Cable Type Neutral Current Sensor (SU40 TU Only)	RCT-1800-COIL 12		
		Voltage Conversion Module (800Vac Systems only)	-		
		Energy Limiting Maintenance Switch	ELM10		

© 2025 NOARK Electric

A32 Series Products Selection Guide

Appendix II

Optional – Mechanical Accessories:
Select the complete catalog number for any mechanical accessories required for the application

Description			Catalog Number		
			A32	ASD32	
Mechanical Accessories Selection	Locking provisions	Lock - 1 Lock/1Key	LK12N1	KLK12N1	Select from these accessories for locking provisions, phase barriers and interlocks
		Lock - 2 Locks/1Key	KLK12N2	KLK12N2	
		Lock - 3 Locks/2Keys	KLK12N3	KLK12N3	
		Padlock Hasp - Plastic	VBP12N	VBP12N	
		Padlock Hasp - Metal	VBP12NM	VBP12NM	
	Door Frame	Door Frame - Fixed	CDP12N	CDP12N	
		Door Frame - D/O	DDP12N	DDP12N	
	Phase Barrier	Phase Barrier - D/O - 3P (800A~2500A)	DPS12N2	DPS12N2	
		Phase Barrier - D/O - 4P (800A~2500A)	DPS12N3	DPS12N3	
		Phase Barrier - D/O - 3P (3200A)	DPS12N4	DPS12N4	
		Phase Barrier - D/O - 4P (3200A)	DPS12N6	DPS12N6	
		Phase Barrier - Fixed - 3P (800A~2500A)	PHS12N2	PHS12N2	
		Phase Barrier - Fixed - 4P (800A~2500A)	PHS12N3	PHS12N3	
		Phase Barrier - Fixed - 3P (3200A)	PHS12N4	PHS12N4	
		Phase Barrier - Fixed - 4P (3200A)	PHS12N6	PHS12N6	
	Interlocks	Mechanical Interlock (2 Breaker-Cable)	IPA12N	IPA12N	
		Door Interlock - D/O	VPEC12NP	VPEC12NP	

© 2025 NOARK Electric

A40 Series Products Selection Guide

Appendix III

Required – Frame and Trip Unit

Select the catalog number segments from the list to create complete catalog numbers for the frame and for the trip unit.

	Description			
		4000A Disconnect Switch		
	Step 1 Frame Type	4000A Breaker		
			A40	**ASD40**
Frame Selection	**Step 2** Interrupting Rating @847V	65kA	Q	Q
		75kA	R	R
		85kA	H	H
	Step 3 Poles	3-pole	3	3
		4-pole	4	4
	Step 4 Mounting	Fixed	F	F
	Step 5 Terminal Orientation	Vertical	V	V
	Step 6 Ampacity	4000A	4000	4000
Trip Unit Selection	**Step 1** Protection Type	LI	SU20	-
		LSI	SU30	
		LSIG	SU40	
	Step 2 Display Type	LED - Basic	NM	
		LCD - Ammeter	NA	
		LCD - Harmonics	NH	
	Step 3 Control Voltage	24 Vdc	A	
		110~130Vac	C	
		208~240Vac	D	

A complete breaker requires the specification of a frame and a trip unit. Select one catalog number segment from each step to create complete catalog numbers for each component. Disconnect switches do not have protection features and do not require a trip unit.

© 2025 NOARK Electric

A40 Series Products Selection Guide

Appendix III

Optional – Electrical Accessories:
Select the complete catalog number for any electrical accessories required for the application.

Description			Catalog Number Segment		
			A40	ASD40	
Electrical Operation Accessories Selection	Auxiliary Contacts	Auxiliary Contact - Fixed - 4NO & 4NC	AX12NF44	AX12NF44	Select from these accessories to make an electrically operated breaker: 1. Motor operator charges breaker springs automatically. 2. Shunt Trip opens the breaker from an outside electrical signal. 3. Undervoltage Release opens the breaker when the voltage supplied to it drops below a set point. 4. Closing Release closes the breaker from an outside electrical signal.
		Auxiliary Contact - Fixed - 4 Form C	AX12NF44C	AX12NF44C	
		Auxiliary Contact - Fixed - 6NO & 6NC	AX12NF66	AX12NF66	
		Auxiliary Contact - Fixed - 6 Form C	AX12NF66C	AX12NF66C	
		Auxiliary Contact - Drawout - 4NO & 4NC	–	–	
		Auxiliary Contact - Drawout - 4 Form C			
		Auxiliary Contact - Drawout - 6NO & 6NC			
		Auxiliary Contact - Drawout - 6 Form C			
	Motor Operator	Motor Operator - 24-30Vdc	MD12NA	MD12NA	
		Motor Operator - 48-60Vdc	MD12NB	MD12NB	
		Motor Operator - 110-130Vac	MD12NC	MD12NC	
		Motor Operator - 208-240Vac	MD12ND	MD12ND	
	Shunt Release	Shunt Trip Release - 24-30Vdc	SHT12NA	SHT12NA	
		Shunt Trip Release - 48-60Vdc	SHT12NB	SHT12NB	
		Shunt Trip Release - 110-130Vac	SHT12NC	SHT12NC	
		Shunt Trip Release - 208-240Vac	SHT12ND	SHT12ND	
	Undervoltage Release	Undervoltage Release - 24Vdc	UVT12NA	UVT12NA	
		Undervoltage Release - 48Vdc	UVT12NB	UVT12NB	
		Undervoltage Release - 110-130Vac	UVT12NC	UVT12NC	
		Undervoltage Release - 208-240Vac	UVT12ND	UVT12ND	
		Undervoltage Release - 380/440Vac	UVT12NE	UVT12NE	
	Closing Release	Closing Release - 24-30Vdc	XF12NA	XF12NA	
		Closing Release - 48-60Vdc	XF12NB	XF12NB	
		Closing Release - 110-130Vac	XF12NC	XF12NC	
		Closing Release - 208-240Vac	XF12ND	XF12ND	
	Others	Breaker Position Contacts (Drawout Only)	-	-	Neutral Current Sensor is used only with LSIG (SU40) trip units installed. ELM10 and VCM10 are used only with Harmonics version Trip Unit installed.
		Ready-to-Close signal contact	PF12N	PF12N	
		Neutral Current Sensor (SU40 TU Only)	NCT12N		
		Cable Type Neutral Current Sensor (SU40 TU Only)	RCT-1800-COIL 12		
		Voltage Conversion Module (800Vac Systems only)	VCM10		
		Energy Limiting Maintenance Switch	ELM10		

© 2025 NOARK Electric

A40 Series Products Selection Guide

Appendix III

Optional – Mechanical Accessories:
Select the complete catalog number for any mechanical accessories required for the application

Description			Catalog Number		
			A40	ASD40	
Mechanical Accessories Selection	Locking provisions	Lock - 1 Lock/1Key	KLK12N1	KLK12N1	Select from these accessories for locking provisions, phaes barriers and interlocks
		Lock - 2 Locks/1Key	KLK12N2	KLK12N2	
		Lock - 3 Locks/2Keys	KLK12N3	KLK12N3	
		Padlock Hasp – Plastic	VBP12N	VBP12N	
		Padlock Hasp –Metal	VBP12NM	VBP12NM	
	Door Frame	Door Frame - Fixed	CDP12N	CDP12N	
		Door Frame - D/O	DDP12N	DDP12N	
	Phase Barrier	Phase Barrier - Fixed - 3P (4000A)	PHS12N4	PHS12N4	
		Phase Barrier - Fixed - 4P (4000A)	PHS12N6	PHS12N6	
	Interlocks	Mechanical Interlock (2 Breaker-Cable)	IPA12N	IPA12N	

© 2025 NOARK Electric

NOARK Electric USA
4560 Excel Parkway,
Addison, Texas 75001
(626) 330-7007
nasales@noark-electric.com

NOARK Electric Canada
975 Bleams Rd. Unit 3
Kitchener, ON N2E 3Z5
519-790-0605
casales@noark-electric.com

na.noark-electric.com

Note: NOARK Electric reserves the right to make technical changes or modify the contents of this document without prior notice. With regard to purchase orders, the agreed particulars shall prevail. NOARK Electric nor any of its affiliates or subsidiaries shall be responsible or liable for potential errors or possible lack of information in this document. NOARK Electric reserves all rights in this document and in the subject matter and illustrations contained therein. Any reproduction, disclosure to third parties or utilization of its contents – in whole or in parts – is forbidden without prior written consent of NOARK Electric.

2025 NOARK Electric • All Rights Reserved

CPPCB202506NA