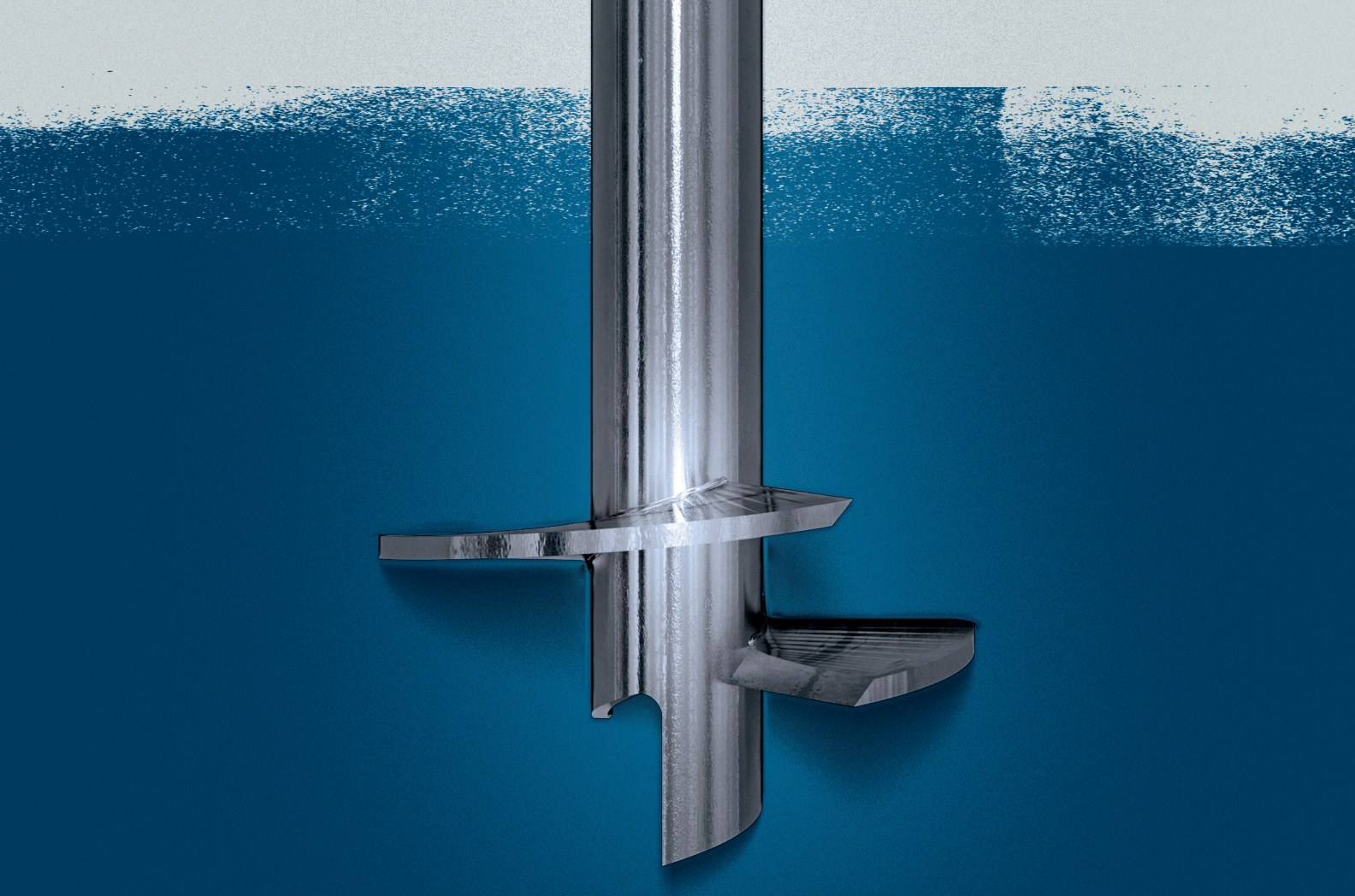

FOUNDATION SUPPORTWORKS

TECHNICAL MANUAL

FOURTH EDITION

SUPPORTWORKS

TECHNICAL MANUAL

Fourth Edition | March 2021

Content

Jake Blessen, P.E.
Don Deardorff, P.E.
Randy Dikeman
Jeff Kortan, P.E.
James Malone
Kyle Olson, P.E.
Ned Waltz, S.E.

Design & Layout

Kyle Oswalt

3D

Kenny Penland

NOTICE & DISCLAIMER

The information contained in this manual (manual) prepared by Foundation Supportworks® (FSW) has been written solely for general informational purposes to assist with project design and writing specifications. While FSW believes the information in this manual is accurate as of the date of publication, the user should not rely upon it for any specific application without examination and verification of its accuracy and applicability by an engineer, designer, or architect licensed in the state of the proposed project. Further, because design and application of foundation support solutions are typically dependent upon site-specific project conditions, including without limitation geotechnical properties of soil which can vary significantly between sampling points, it is up to the user, prior to installation, to seek independent engineering analysis and to verify compliance with applicable rules and regulations.

THIS MANUAL IS PROVIDED ON AN "AS-IS" BASIS. FSW DOES NOT WARRANT THE INFORMATION IN THIS MANUAL AND SPECIFICALLY DISCLAIMS ALL WARRANTIES, INCLUDING WARRANTIES OF EXPRESS OR IMPLIED MERCHANTABILITY, FITNESS FOR A PARTICULAR PURPOSE, AND NON-INFRINGEMENT. FSW expressly disclaims liability for: 1) the adoption, revision, implementation, use or misuse of the information in this manual; 2) the installation of FSW products by end-users; and 3) as permitted by law, any consequential, special, or incidental damages.

This manual and all the materials and inventions disclosed herein (excluding third-party information), including all intellectual property rights thereto, are the sole property of FSW and protected by federal patent, trademark, and copyright laws (FSW Property). Any unauthorized use of FSW Property or the copying of all or any part of this manual in any form is expressly forbidden without the written permission of FSW, unless otherwise stated in this manual.

FSW is constantly innovating in order to stay on the leading edge of the foundation support and repair industry and, so, it reserves the right to change or modify product design and specifications without notice. Moreover, some of the third-party material incorporated in this manual may be modified or amended from time to time. Please contact FSW staff to verify use of the most recent design information and product specifications.

Corporate Headquarters:
Supportworks®, Inc.
11850 Valley Ridge Drive
Papillion, NE 68046

800-281-8545 | Toll Free
402-885-6615 | Engineering Department

www.OnStableGround.com
www.FoundationSupportworks.com

© 2024 Supportworks®
All Rights Reserved

TABLE OF CONTENTS

Notice & Disclaimer . . . iii
Introduction . . . x
About Supportworks®, Inc. . . . xi
Foundation Supportworks Engineering . . . xii
Preliminary Design Services . . . xiii
HelixPro® Helical Foundation Design Software . . . xiii
Online Resources . . . xv
Continuing Education Opportunities . . . xv

Chapter 1 Helical Foundation Systems . . . 1
1.1 History . . . 3
1.2 Summary Description . . . 4
1.3 Helical Foundation System Components . . . 5
1.3.1 Helix Plates . . . 5
1.3.2 Central Shaft . . . 7
1.3.2.1 Coupler Detail . . . 8
1.3.2.2 Round vs. Square . . . 11
1.3.3 Brackets . . . 13
1.4 Benefits . . . 17
1.5 Limitations . . . 18
1.6 Design Considerations . . . 20
1.6.1 Spacing & Depth . . . 20
1.6.2 New Construction vs. Retrofit . . . 22
1.7 Helical Bearing Capacity Design Overview . . . 23
1.7.1 Individual Bearing Method . . . 25
1.7.1.1 Critical Depth . . . 27
1.7.2 Cylindrical Shear Method . . . 27
1.7.3 Torque Correlation Method . . . 28
1.8 Helical Tiebacks . . . 31
1.8.1 Design Considerations . . . 33
1.9 Helical Soil Nails . . . 36
1.9.1 Construction Methodology . . . 38
1.9.2 Design Considerations . . . 39
1.9.2.1 Temporary & Permanent Wall Facing . . . 43
1.9.2.2 Limit States . . . 43
1.10 Helicast® Grouted Helical Pile System . . . 44
1.10.1 Helicast Components . . . 45
1.10.1.1 Central Steel Shaft . . . 45
1.10.1.2 Lead Soil Displacement Plates . . . 45
1.10.1.3 Extension Soil Displacement Plates . . . 46
1.10.1.4 Outer Casing . . . 46
1.10.1.5 Grout Mixture . . . 47

© 2024 Supportworks®
All Rights Reserved

1.10.2 Benefits . . . 49
1.10.3 Limitations . . . 49
1.10.4 Design Considerations . . . 49
1.10.4.1 Frictional Resistance . . . 50
1.10.4.2 End-Bearing Resistance . . . 54
1.10.4.3 Grout Strength Checks . . . 54
1.10.4.4 Factors of Safety . . . 55
1.10.4.5 Additional Design & Installation Considerations . . . 55
1.11 Load Tests . . . 57
1.12 Design Examples . . . 59
1.12.1 Helical Piles . . . 59
1.12.2 Helical Tiebacks . . . 64
1.12.3 Helicast Piles . . . 65
1.13 Installation . . . 70
1.13.1 General Information . . . 70
1.13.1.1 Preparation . . . 70
1.13.1.2 Crowd . . . 71
1.13.1.3 Penetration Rate . . . 71
1.13.2 Equipment . . . 71
1.13.2.1 Drive Heads . . . 71
1.13.2.2 Installation Tooling . . . 74
1.13.2.3 Monitoring Torque . . . 76
1.13.3 Installation Guidelines . . . 79
1.13.3.1 New Construction Helical Piles . . . 79
1.13.3.2 Retro Helical Piers . . . 81
1.13.3.3 Helical Tiebacks . . . 85
1.13.3.4 Helicast Piles . . . 86

Appendix 1A Helical Foundation Systems . . . 93

Appendix 1B Helicast® Grouted Helical Pile Specifications & Capacities . . . 155

Appendix 1C Lift Assembly Specifications . . . 159

Appendix 1D Pile Buckling Considerations . . . 165

Appendix 1E Corrosion Considerations . . . 171

Appendix 1F Guidelines & Recommendations . . . 177
Geotechnical Investigation Guidelines For Helical Pile, Helical Anchor & Push Pier Design . . . 179
Policy for Axial Compression or Axial Tension Load Tests on Helical Piles & Anchors . . . 185

References . . . 189

© 2024 Supportworks®
All Rights Reserved

Chapter 2 **Hydraulically Driven Push Pier Systems** **193**
2.1 History 195
2.2 Summary Description 197
2.2.1 Applications 198
2.3 Push Pier System Components 198
2.3.1 Bracket Assemblies 198
2.3.1.1 Eccentric Loading 199
2.3.1.2 External Sleeve 200
2.3.2 Starter Tube 201
2.3.2.1 Friction Reduction Collar 202
2.3.3 Pier Tube 203
2.3.3.1 Coupling 203
2.4 Benefits 204
2.5 Limitations 205
2.6 Corrosion Protection 205
2.7 Push Pier Installation Equipment 206
2.7.1 Drive & Lift Cylinders 206
2.7.2 Hydraulic Pumps 207
2.7.2.1 Gasoline Powered Hydraulic Pumps 208
2.7.2.2 Electric-Powered Hydraulic Pump Units 208
2.7.3 Remote Valve Assembly 209
2.7.4 Hoses & Fittings 209
2.7.5 Drive Stands 209
2.7.6 Lift Cylinder Assemblies 210
2.8 Push Pier Capacity & Spacing 210
2.8.1 Factor of Safety 212
2.8.2 Bolting the Under-Footing Bracket to the Foundation 213
2.9 Under-Footing Push Pier Installation 213
2.10 PP288 Flush-Mount Push Pier Installation 225
2.11 Concentric Push Pier Installation 226
2.11.1 Concentric Piers with SmartJacks 230
2.12 PP288 Slab Push Pier Installation 232
2.13 Push Pier Load Testing 239

Appendix 2A **Bracket Specifications & Capacities** **241**

Appendix 2B **Drive Stand Specifications** **251**

Appendix 2C **Lift Assembly Specifications** **261**

© 2024 Supportworks®
All Rights Reserved

Chapter 3 **Wall Stabilization Systems** **267**
3.1 Introduction 269
3.1.1 Construction Methods 269
3.1.2 Evidence of Distress 270
3.1.3 Causes of Failure 271
3.1.4 Options for Repair 271
3.1.4.1 CarbonArmor® Wall Reinforcing System 272
3.1.4.2 PowerBrace™ Wall Bracing System 272
3.1.4.3 GeoLock® Wall Anchor System 273
3.1.5 Choosing the Right System 274
3.1.6 Design 275
3.1.6.1 Design with GeoLock® Wall Anchors 276
3.1.6.2 Design with PowerBrace™ Wall Braces 278
3.1.7 Straightening the Wall 280
3.1.8 Solutions for Extreme Wall Problems 281
3.1.8.1 Wall Deflection Guidelines 283
3.2 GeoLock® Wall Anchor System 284
3.2.1 Summary Description 284
3.2.1.1 Advantages 284
3.2.2 Installation Guidelines 285
3.2.2.1 Spacing 285
3.2.2.2 Torque Recommendations 285
3.2.2.3 Depth & Location of Earth Anchor 286
3.2.3 Installation Steps 289
3.3 PowerBrace™ Wall Bracing System 291
3.3.1 Summary Description 291
3.3.2 Installation Steps 292
3.4 CarbonArmor® Wall Reinforcing System 294
3.4.1 Summary Description 294
3.4.1.1 Advantages 294
3.4.2 Installation Steps 295
3.4.2.1 ArmorLock® System 297
3.4.2.2 Special Installation Considerations 298

Appendix 3A **GeoLock® Wall Anchor System** **299**

Appendix 3B **PowerBrace™ Wall Bracing System** **303**

Appendix 3C **CarbonArmor® Wall Reinforcing System** **307**

© 2024 Supportworks®
All Rights Reserved

Chapter 4 **Crawl Space Support Systems** **311**
4.1 Summary Description 313
4.1.1 Advantages 314
4.2 Installation Steps 315
4.3 SmartJacks with Concentric Piers 318

Appendix 4A **SmartJack® Systems** **319**
Model 288 SmartJack® System 321
Model 350 SmartJack® System 329

Chapter 5 **Polyurethane Foam & Resin** **337**
5.1 Summary Description 339
5.2 Applications 340
5.2.1 Residential 340
5.2.2 Commercial 341
5.2.3 Roadwork 342
5.2.4 Pipeline & Trenching Applications 344
5.2.5 Soil Stabilization 345
5.3 Benefits 345
5.4 Products 346
5.5 Installation Process 347
5.5.1 Equipment 347
5.5.2 Installation Steps 348
5.6 Product Use Considerations 349
5.6.1 Installation Considerations 349
5.6.2 Safety Considerations 350
PolyLevel® 100 Soil Stabilizer Foam Technical Information **353**
PolyLevel® 100 Soil Stabilizer Foam Application Information **354**
PolyLevel® 220 Trench Breaker Foam Technical Information **355**
PolyLevel® 220 Trench Breaker Foam Application Information **356**
PolyLevel® 250 Hydrophobic Fast Foam Technical Information **357**
PolyLevel® 250 Hydrophobic Fast Foam Application Information **358**
PolyLevel® 250 Hydrophobic Polar Foam Technical Information **359**
PolyLevel® 250 Hydrophobic Polar Foam Application Information **360**
PolyLevel® 250 Hydrophobic Standard Foam Technical Information **361**
PolyLevel® 250 Hydrophobic Standard Foam Application Information **362**
PolyLevel® 400 Hydrophobic Foam Technical Information **363**
PolyLevel® 400 Hydrophobic Foam Application Information **364**

Supplemental information for products and systems not published in this manual can be found on the Foundation Supportworks commercial website, www.OnStableGround.com.

© 2024 Supportworks®
All Rights Reserved

INTRODUCTION

Thrasher, Inc. and Supportworks, Inc. office, shop and warehouse

About Supportworks®, Inc.

Supportworks, Inc. continues to innovate by improving and adding products for both foundation and concrete slab stabilization and repair. Foundation Supportworks is part of the Supportworks family of brands. Foundation Supportworks is a network of like-minded foundation and concrete repair dealers across North America and therefore differentiate products, sales and production tools, and technical support to better serve these growing networks of installing contractors.

Foundation Supportworks is a leading manufacturer of helical pile systems, hydraulically driven push pier systems, wall anchoring and wall bracing systems, and supplemental crawl space support systems. Within the line of wall bracing products, Foundation Supportworks has the exclusive rights to market and distribute PowerBrace™ Wall Bracing Systems and CarbonArmor® and ArmorLock® carbon fiber wall reinforcement. Inside of the more traditional offerings of foundation support and repair solutions, Foundation Supportworks formulates and distributes the PolyLevel® product line of polyurethane foams and resins. Each of the products or systems listed above are included in chapters of this Fourth Edition Technical Manual.

Foundation Supportworks was founded on the principles of integrity, quality and service and it is our mission to provide the industry with innovative solutions that are appropriately designed and tested, expertly installed, and dependable to perform as promised.

Foundation Supportworks began in April 2008 with the partnership of Greg Thrasher and Larry Janesky, both feeling there was a need for a manufacturer in the foundation support and foundation repair industry to not only bring fully engineered, quality products to the marketplace, but to also provide installing contractors with the proper tools and training to assist them in building more successful businesses. Greg and Larry each already owned successful basement waterproofing and foundation repair companies. Greg Thrasher started his business in 1975 in Earling, Iowa and then moved to Omaha, Nebraska in 1980. Thrasher, Inc. has since grown to become one of the largest residential waterproofing and foundation stabilization companies in the United States. With continued company growth, Thrasher, Inc. started a commercial division of the business in 2004. Larry Janesky started his career in 1982 as a self-employed carpenter and builder. In 1987, Larry founded Basement Systems, Inc. in Seymour, Connecticut. Basement Systems, Inc. is now the largest network of waterproofing and crawl space repair contractors in the world. After eight years of successful partnership, Greg purchased Larry's share of Foundation Supportworks in the summer of 2016. In 2020, Foundation Supportworks became part of the Supportworks, Inc. family of brands alongside Hello Garage, a national garage renovation franchise, and Solution View, a SAAS company serving home repair contractors.

Thrasher, Inc. and Supportworks, Inc. operate from the same physical address and take advantage of some shared facilities and general office staff. This relationship of manufacturer and contractor housed and working together and for the same owner allows for greater product innovation opportunities through collaboration, development and testing of concepts with shared personnel and equipment, and access to Thrasher, Inc. projects and personnel to assist in training Supportworks contractors. Training is offered in the areas of sales, production, call center, marketing, accounting, human resources, and management.

© 2024 Supportworks®
All Rights Reserved

Foundation Supportworks' commitment to the networks of installing contractors and, ultimately, the end consumer, is apparent by employing a team of customer service and support staff that is unparalleled in the industry. Our staff of full-time professionals includes:

- Geotechnical and Structural Engineers
- Business Department Managers/Trainers
- Product Line Managers and Product Installation Experts
- Sales Development Specialists
- Video Production Specialists
- Graphic Designers
- 3D Graphics and 3D Animation Experts
- Software Engineers and Website Developers

Please visit the "About Us / Meet the Team" page at *OnStableGround.com* for more biographical information about the company employees.

As of the printing date of this manual, there are over 130 independent contractors throughout the United States and Canada utilizing Foundation Supportworks products for their projects/applications. With installing contractors from coast to coast, Foundation Supportworks is focused on training, gathering and sharing the best practices in the industry. Your authorized installing contractor is therefore operating with the resources of literally hundreds of years of combined experience.

The coupled effect of the expertise of the Foundation Supportworks staff and our installing contractor networks' years of combined experience and leadership in the structural stabilization industry translates to quality products, dependable service, expert installations and a team you can trust.

Our Mission Statement:
To champion contractor success through genuine relationships and radical support.

It is our core belief that if we provide a level of support that is unheard of and unexpected in this industry, our dealers (contractors) will be equipped and able to fully focus on their main objective – serving customers and design professionals in their markets with unparalleled quality and expertise.

Foundation Supportworks Engineering

Foundation Supportworks has both geotechnical and structural engineers on staff for product design, quality assurance of products, and support to our networks of installing contractors. Our in-house engineers are available to assist with preliminary design applications and to provide technical support to engineers, architects, building departments, and general contractors local to the projects. Our engineers are experts in the industry and routinely present technical information at industry trade conferences, engineering and architectural meetings and conferences, as well as to contractors and home inspectors. Please visit "About Us/Meet the Team" at OnStableGround.com for more information about our engineers.

Foundation Supportworks engineers act on behalf of the product manufacturer and therefore are unable to serve as the engineer of record by signing and stamping project-specific drawings and details. Rather, they can provide preliminary design recommendations, consultation, and the technical information and support necessary for the local design professional to feel comfortable specifying and utilizing Foundation Supportworks products for their projects and applications.

© 2024 Supportworks®
All Rights Reserved

Engineering Seminar

Preliminary Design Services

Preliminary design services and consultation for prospective piering, anchoring and slab stabilization projects are provided at no cost to design professionals and installing contractors. These services may include review of available site and soil information, review of plans and specifications, and development of preliminary design recommendations with Supportworks products given the load and deflection criteria specified. For example, if a potential helical pile project is submitted, Supportworks engineers may provide recommendations for shaft size, helix plate configuration, target installation torque, and depth. Other recommendations may include sizing of drive heads and installation equipment, use and type of calibrated torque monitoring equipment, selection of new construction or retrofit brackets, and how to deal with conditions that may affect installation. If the site or project is not a good fit for helical piles, or any of the other products offered by Foundation Supportworks, that opinion would be provided also.

A request for preliminary design services can be submitted online at *OnStableGround.com* or by contacting the Foundation Supportworks Engineering Department at (402) 885-6615 or *engineering@supportworks.com*.

HelixPro® Helical Foundation Design Software

To simplify the design process for helical piles and tiebacks, Foundation Supportworks created HelixPro® Helical Foundation Design Software for Professionals, a web-based helical foundation design tool available free of charge to design professionals. With the software being web-based, minor updates and revisions are automatic. You never have to worry about having the most recent version. The program calculates compression and uplift capacities of Foundation Supportworks helical piles, tension capacities of Foundation Supportworks helical tiebacks, and compression and uplift capacities of Helicast® piles, i.e., piles designed and constructed with a grout column surrounding the helical pile extension sections. HelixPro calculates pile and tieback end-bearing capacities using the Individual Bearing Method. For calculation of frictional resistance of Helicast piles, the user can select from three common methods and also utilize

© 2024 Supportworks®
All Rights Reserved

"User Input Bond Values." For more information about the design of helical piles, Helicast piles and helical tiebacks, visit Chapter 1 of this Technical Manual.

HelixPro is ideal for analyzing both vertical and battered piles for deep foundations of new structures, seismic retrofitting applications, tension/uplift elements of guyed structures, tie downs, and much more. The program allows you to quickly perform multiple trials with varying soil profiles and helix configurations, making it easy to select the most economical and practical solution for your project. HelixPro provides a step-by-step "wizard" approach, making it easy to use and navigate. In the Pile Design module, users also have the option of using the more iterative process to pile design, or allowing the program to do most of the heavy lifting. With a few basic input values in the Search for Piles submodule, HelixPro will determine the appropriate shaft size for the design load, the helix plate configuration, and the minimum depth at which the required capacity is achieved.

Some of the many other features of the software include:

- Help menus and video tutorials along the way to further assist the user through the design process
- Ability to save and manage projects and sort these projects by date, application and project status
- Graphical representation of soil layers and helix plate depths
- Graphical representation of installation torque with depth, along with boundary lines to represent the torsional rating of the shaft
- Pop-up warnings to alert the user when the torsional rating of the shaft is exceeded, when non-standard helix plate configurations are selected, when minimum depth or embedment criteria are violated, etc.
- Generation of a summary report with a graphical representation of the proposed installation
- Ability to view and/or include specific or generic pile and tieback details (in .pdf format) in the final report
- Links to view all of the online resources at *OnStableGround.com*

Get started today!

Type *www.helixpro.supportworks.com* into your web browser and click on the "Register Now" link. The software will walk you through some simple registration steps. Within two working days, you should receive an email stating that your account has been activated. Foundation Supportworks engineers utilize HelixPro every day to prepare preliminary design recommendations for the Foundation Supportworks contractor network. We are confident that you will also find HelixPro to be a valuable tool for your design of helical foundations.

© 2024 Supportworks®
All Rights Reserved

Online Resources

OnStableGround.com was created to be a technical resource for design professionals and contractors. Sections of the site contain general product overviews for the various product lines, over 190 case studies from across North America where Foundation Supportworks products were utilized, white papers written by Foundation Supportworks' in-house experts, and all previous issues of our quarterly newsletter, GroundED, which was first published back in 2009. Links are also provided to subscribe to GroundED, request Preliminary Design Services, and register for HelixPro.

If you are looking for even more technical content, the Technical Information section provides access to:

- The interactive electronic version of this technical manual. The electronic version of the manual often includes revisions to text and technical product specifications made between printings of hard copies. Those pages would be identified with revision clouds and dates in the bottom right corners.

- Supplemental materials; technical specifications for products and systems that were not included in the current version of the technical manual.

- Product evaluation reports. Several Foundation Supportworks products have been evaluated by third-party evaluation services, including the International Code Council Evaluation Service (ICC-ES), the Canadian Construction Materials Centre (CCMC), the IAPMO Uniform Evaluation Service (UES), and the Wisconsin Department of Safety and Professional Services.

- Product drawings in ".pdf" and ".dwg" formats.

- Editable model product specifications for:

  Helical Pile Foundations – Compression Applications
  Helical Anchor Foundations – Tension Applications
  Helical Soil Nails – Earth Retention Applications
  Helicast® Pile Foundations – Compression and Tension Applications
  Hydraulically Driven Push Pier Systems
  Polyurethane Void Filling or Soil Stabilization Applications
  Polyurethane Concrete Pavement/Slab Stabilization Applications

Continuing Education Opportunities

Foundation Supportworks is a leading provider of continuing education for design professionals in North America on the topics of helical foundation systems, push pier systems, and polyurethane injection. We know there are many individuals and companies who claim to offer great learning opportunities, but we find that it is the

© 2024 Supportworks®
All Rights Reserved

collaboration of both subject matter experts and curriculum design experts that yields the best results in terms of attendees meeting learning objectives.

Our curriculum and education methods have been evaluated by the American Council of Engineering Companies' (ACEC) Registered Continuing Education Program (RCEP), and Foundation Supportworks has been named an approved provider of continuing education through that organization. Our curriculum has also been evaluated and approved directly by the Florida Board of Professional Engineers, as Florida was the one state where RCEP approval was not recognized.

Foundation Supportworks offers both distant and in-person learning opportunities. We host regularly scheduled monthly webinars on the following topics at 11:30 am and 1:30 pm Central time:

1st Wednesday of each month
An Introduction to Helical Foundation Systems

2nd Wednesday of each month
An Introduction to Polyurethane Injection

3rd Wednesday of each month
An Introduction to Push Pier Systems

For more in-depth knowledge about product design, installation and applications for the solutions Foundation Supportworks provides, we offer half day in-person presentations several times each year in various locations throughout North America. We also speak regularly for professional organizations across the United States during their monthly, quarterly or annual meetings.

To register for any continuing education opportunity, please contact your local Foundation Supportworks installing contractor or send us an email at *training@supportworks.com*. All learning opportunities provided by Foundation Supportworks are free of charge, and best of all, can be submitted as hours to fulfill your CEU/PDH requirements.

© 2024 Supportworks®
All Rights Reserved

CHAPTER 1

Helical Foundation Systems

1.1 History

The use of helical piles and anchors in construction dates back nearly 200 years. In the 1830s, the earliest versions of today's helical piles were used in England for moorings and for foundations of lighthouse structures (*Figure 1.1* and *Figure 1.2*).

Figure 1.1 Lighthouse supported by screw (helical) pile foundations

Figure 1.2 Early patent of screw (helical) piles

Usage spread throughout the world through the later 19th century for similar type applications. Developments and improvements in other deep foundation alternatives then resulted in a general decrease in the use of helical piles in the first half of the 20th century. Following World War II, advancements in hydraulic drive heads and the explosive expansion of the national utility grid caused a resurgence in the use of helical piles, primarily in tension applications for guying towers and poles. Today, helical piles are used in both tension and compression load applications and are gaining worldwide acceptance throughout the construction industry and engineering community due to the versatility of both the product and the installation equipment.

In 2007, the International Code Council Evaluation Service (ICC-ES) approved AC358, Acceptance Criteria for Helical Pile Systems and Devices. AC358 provides helical pile manufacturers with standardized methods for the design and testing of helical piles, resulting in product capacity ratings that are generally considered conservative, yet appropriate. Interested parties may purchase a copy of AC358 from the ICC-ES website: *www.icc-es.org*. Helical piles have also been included in the International Building Code since the 2009 edition.

© 2024 Supportworks®
All Rights Reserved

1.2 Summary Description

Helical piles are a factory-manufactured steel foundation designed to resist axial compression, axial tension, and/or lateral loads from residential and commercial structures. The system consists of a central shaft, one or more helix-shaped bearing plates, and a bracket that allows attachment to structures. The Helicast® Grouted Helical Pile System further includes soil displacement plates and a grout column surrounding much of the pile shaft. Helicast piles are described in detail in *Section 1.10*. The helix plates are commonly referred to as blades, flights or helices and are welded to the lead section. Extension shafts, with or without additional helix plates, are used to extend the pile to competent load bearing soil and to achieve design depth and capacity. Brackets are used at the tops of the piles for attachment to structures, either for new construction or retrofit applications. Helical piles are advanced (screwed) into the ground with the application of torque (*Figure 1.3*).

Figure 1.3 New construction helical pile installation

The terms helical piles, screw piles, helical piers, helical anchors, helix piers, and helix anchors are often used interchangeably by specifiers. However, the term "pier" more often refers to a helical pile loaded in axial compression, while the term "anchor" more often refers to a helical pile loaded in axial tension. The term "pile" traditionally describes a deep foundation that can resist both tension and compression loads.

Helical tiebacks and helical soil nails are types of helical anchors differentiated by their specific design methodology and/or installation orientation. Helical tiebacks are designed similarly but differ from vertically-installed helical piles in that they are typically installed in a horizontal to 45-degree downward from horizontal orientation to laterally support the tops of earth retaining structures, e.g., retaining walls, foundation walls, sheet-pile walls, soldier pile walls with wood lagging, etc. (*Figure 1.4* and *Figure 1.5*). Helix plates are typically limited to the lead section or the lead and first extension of the tieback. Multi-helix leads for piles and tiebacks generally consist of increasing plate sizes from the tip. Helical soil nails are designed with same-sized helix plates, typically 6 or 8 inches in diameter, spaced evenly along the entire length of the nail, including the lead and extensions. Soil nails are typically installed in a closely-spaced grid pattern to reinforce the soil and provide a stable earth mass. Helical tiebacks and helical soil nails are presented in their own sections later in this chapter.

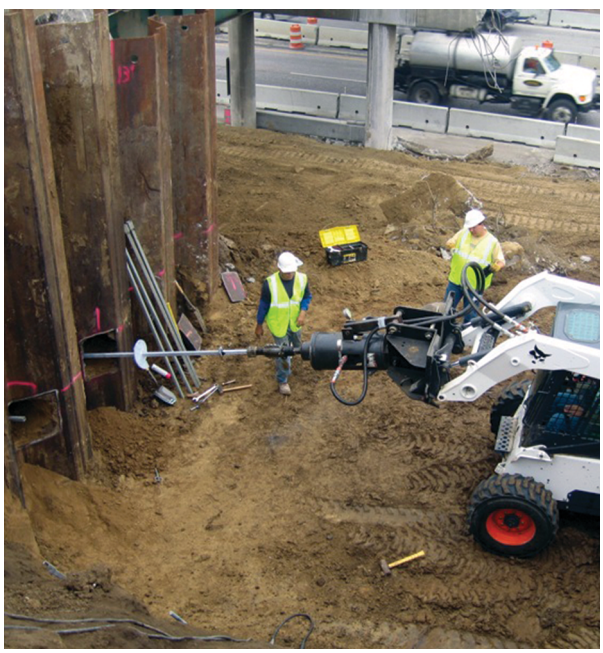

Figure 1.4 Sheet-pile wall stabilization with helical tiebacks

© 2024 Supportworks®
All Rights Reserved

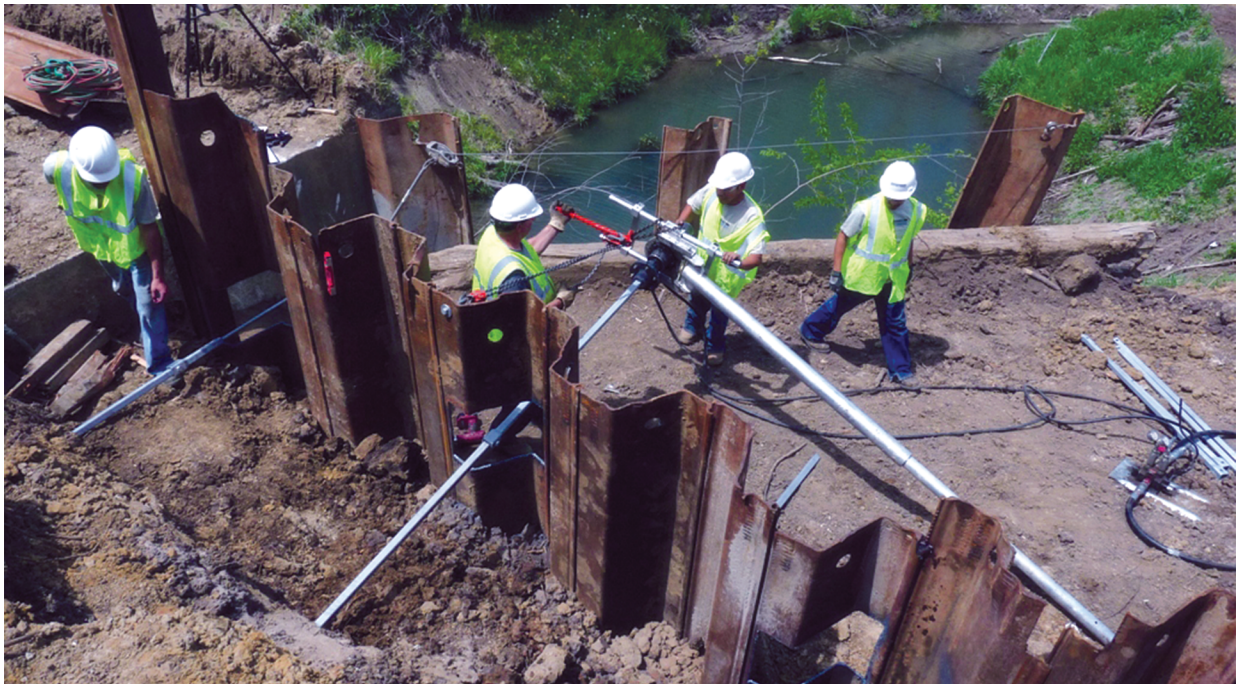

Figure 1.5 Helical tieback installation with hand-held equipment

1.3 Helical Foundation System Components

1.3.1 Helix Plates

The initial installation of a helical pile is performed by applying downward force (crowd) and rotating the pile into the earth via the helix plates. Once the helix plates penetrate to a depth of about 2 to 3 feet, the piles generally require less crowd and installation is accomplished mostly by the downward force generated from the helix plates, similar to the effect of turning a screw into a block of wood. Therefore, the helix plate performs a vital role in providing the downward force or thrust needed to advance the pile to the bearing depth. The helix plate geometry further affects the rate of penetration, soil disturbance and torque-to-capacity correlation. The consequences of a poorly-formed helix are twofold; (1) the helix plate severely disturbs the soil with an augering effect which (2) directly results in more movement upon loading than a pile with well-formed helices. The differences between a well-formed helix and poorly-formed helix are visually obvious and are shown in *Figure 1.6*.

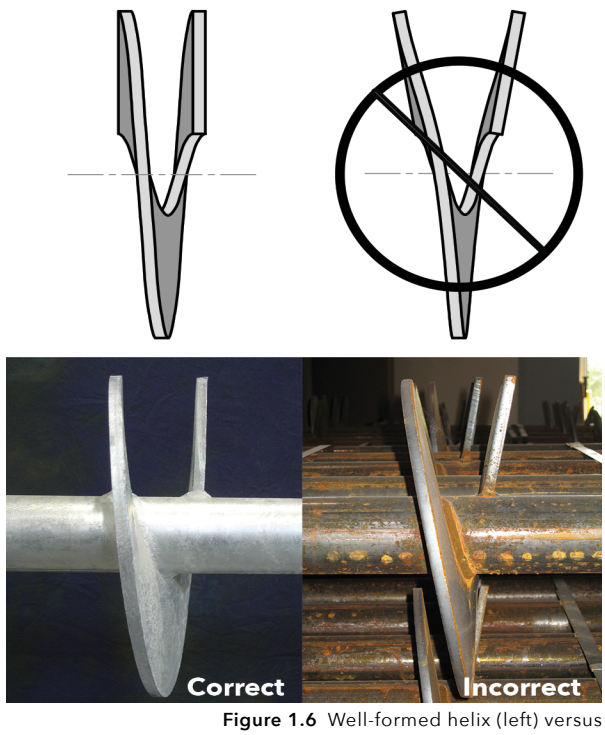

Figure 1.6 Well-formed helix (left) versus poorly formed helix (right)

© 2024 Supportworks®
All Rights Reserved

A true helix shape can be described as a three-dimensional curve that travels along and sweeps around an axis where any radial line remains perpendicular to that axis.

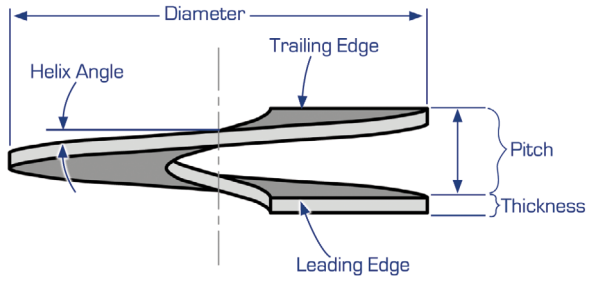

Figure 1.7 Helix Plate Geometry

A helix plate is further defined by geometric parameters including diameter, thickness, pitch, helix angle and edge geometry (*Figure 1.7*). Helix plate diameters can vary from 6 to 16 inches for most commonly used shaft sizes. The majority of helix plates have thicknesses of either ⅜ or ½ inch, however, thicker plates are used for larger diameter piles. The pitch is the distance or separation between the leading and trailing edges and controls the depth of installation per revolution of the helix plate. The helix angle is the blade angle formed relative to the shaft and will vary within the blade for any given radius. The edge geometry refers both to the perimeter geometry of the helix and the shape of the leading and trailing edges. Most helix flights are manufactured with a perimeter geometry that is generally circular. The leading edge can have varying cuts and shapes including blunt (flat), sharpened, standard cut, V-style cut, etc. to provide options for changing soil conditions. The trailing edge is generally a standard cut, blunt or sharpened, and has no effect on installation in varying soils.

A helix plate is formed by cold pressing the steel plate with matching machined dies. Both the shape of the die and the amount of applied force during the press operations are important to ensure parallel leading and trailing edges and the required pitch tolerances. The amount of die press, i.e., the pressed shape and deflection, must also be adjusted for changing plate thicknesses, steel grades and anticipated spring back.

ICC-ES AC358 establishes design and testing criteria for helical piles evaluated in accordance with the International Building Code. AC358 provides the following criteria for helix plates in order to be considered as a "conforming system".

- True helix-shaped plates that are normal with the shaft such that the leading and trailing edges are within ¼ inch of parallel.
- Helix plate diameters may be between 8 and 14 inches with thicknesses between ⅜ inch and ½ inch.
- Helix plates and shafts are smooth and absent of irregularities that extend more than 1/16 inch from the surface excluding connection hardware and fittings.
- Helix spacing along the shaft shall be between 2.4 to 3.6 times the helix diameter.
- The helix pitch is 3 inches ± ¼ inch.
- All helix plates have the same pitch.
- Helical plates are arranged such that they theoretically track the same path as the leading helix.
- For shafts with multiple helices, the smallest diameter helix shall be mounted to the leading end of the shaft with progressively larger diameter helices above.
- Helical foundation shaft advancement equals or exceeds 85% of helix pitch revolution at time of final torque measurement.
- Helix plates have generally circular edge geometry.

Non-conforming systems may also seek an ICC-ES product evaluation, but must undergo additional product testing.

© 2024 Supportworks®
All Rights Reserved

Foundation Supportworks helical piles feature plates manufactured with a helix shape conforming to the geometry criteria of ICC-ES AC358. Conversely, plates that are not a helix shape are often formed to a "duckbill" appearance. These plates create a great deal of soil disturbance, do not conform to the helix geometry requirements of ICC-ES AC358, and their torque-to-capacity relationships are not well documented.

The helix plate diameter, thickness and cut are selected based upon the soil and load conditions for the project. Foundation Supportworks currently offers:

- Helix plate diameters ranging from 6 inches to 16 inches
- Standard helix plate thicknesses of 5⁄16 inch, 3⁄8 inch, and ½ inch
- Plate steel yield strengths of at least 50 ksi (Grade 50).
- Standard H-style cut and V-style cut plates (*Figure 1.8*). V-style plates are special order to assist in penetrating dense or rocky soils. The leading edges of all helix plates are sharpened (cut) to a 45-degree angle.

Figure 1.8 Standard H-style and V-style plates

1.3.2 Central Shaft

The central shaft of a helical pile typically consists of either solid square bar or hollow round sections of tube or pipe. The shaft size is selected to: (1) resist the torsional forces applied during installation and (2) transfer the axial loads applied by the structure down to the helix plates and surrounding soils. The central shaft of an installed helical pile is comprised of a lead section and extensions. The lead section includes either a 45-degree, bevel-cut or spiral-cut tip (*Figure 1.9*) with one or more helix plates welded along its length. The spiral-cut tip assists with pile advancement and penetration into dense to hard soil while the 45-degree, bevel-cut tip is generally acceptable for less dense soil conditions.

Lead sections are generally fabricated in 5, 7 and 10-foot lengths. Extensions, which may include additional helix plates to provide increased pile capacity in weaker soil conditions, are used to advance the pile to the design depth, length, and/or until the desired torque is achieved. Extensions are generally fabricated in 3, 5, 7 and 10-foot lengths. Custom lead and extension lengths up to about 20 feet may also be considered to reduce or eliminate coupled connections, thereby minimizing overall product costs and improving installation efficiencies. Generally, a large track excavator would be required to provide the reach necessary to install these longer sections.

Figure 1.9 45-degree, bevel-cut tip and spiral-cut tip geometry

© 2024 Supportworks®
All Rights Reserved

1.3.2.1 Coupler Detail

The coupler detail is yet another extremely important feature when considering helical piles and when selecting or specifying a product manufacturer. Manufacturers may advertise that they carry the same or equivalent helical shaft. However, shaft and coupler details are not consistent between manufacturers and these differences may not be readily apparent by simply reviewing marketing brochures and product capacity tables. Some manufacturers rate their products based upon the capacities of the gross section of the shaft, thereby ignoring any limitations caused by the coupled connections. For these "equivalent" products, there can be dramatic differences in material properties, tolerances, spacing of bolt holes, oversize of bolt holes, general fit-up, weld quality, etc.

Some of the more common coupler details for round shaft include external welded, external detached, internal detached, and forged and upset. External couplers utilize tube or pipe sections with an internal diameter slightly larger than the outside diameter of the central shaft material (*Figure 1.100, 1.11, and 1.12*). These couplers can be sized to provide tight connections that reduce angular movement and variances from straightness. Such displacements at the couplers introduce eccentricities to the system which can significantly reduce the allowable compressive capacity of the pile, especially considering the slenderness of the more widely used shaft material (typically 3.5-inch outside diameter and smaller).

Figure 1.10 Foundation Supportworks' HP288 with external welded coupler

Figure 1.11 Foundation Supportworks' HP350 with external detached coupler

Internal detached couplers are made from solid round stock, tube, or pipe material with an outside diameter smaller than the inside diameter of the central shaft material. Internal coupler diameters may be significantly undersized to prevent interferences with internal weld beads of the central shaft or due to the variations that are typical in wall thicknesses and inside diameters of pipe sections. Larger gaps between the inside diameter of the shaft and the outside diameter of the coupler can result in a connection with more potential for angular displacements.

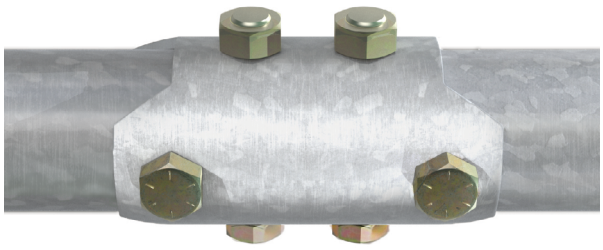

Figure 1.12 Foundation Supportworks' HP450 with external detached coupler

Forged and upset couplers are formed by heating one end of the shaft, placing this end in a form and then enlarging the end with a hammer-like tool or press (*Figure 1.13*).

Figure 1.13 Upset coupler with oversized, closely spaced bolt holes

© 2024 Supportworks®
All Rights Reserved

With this method of manufacturing, it is difficult to create tight connections to strict tolerances. It is not uncommon to have ⅛-inch or more difference between the outside diameter of the shaft and the inside diameter of the upset coupler of the round shaft (*Figure 1.14*).

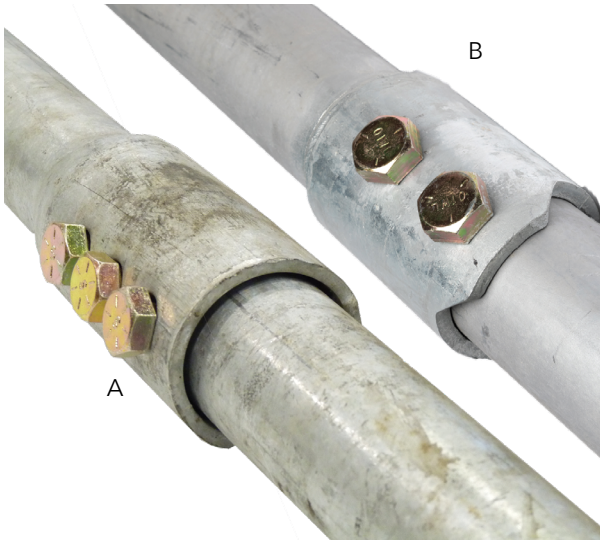

Figure 1.14 Coupler tolerances, (A) Competitor upset coupler, (B) Foundation Supportworks' external welded coupler

Again, the greater the freedom allowed in the connection, the greater the potential variance from straightness and the higher the potential for bending or buckling of the pile under high compressive loads (*Figure 1.15*). The risk of pile buckling further increases if the pile extends through soil strata consisting of very soft clay or very loose sand, or with unsupported pile lengths through water, through fluid soils or above the ground surface.

Figure 1.15 Competitor upset coupler variance from straightness

Foundation Supportworks' round shaft helical piles are manufactured with external welded or external detached couplers. Piles with shaft outside diameters (O.D.) of 2.875 inches and smaller have external welded couplers while 3.5-inch O.D. and 4.5-inch O.D. shafts have external detached couplers. Foundation Supportworks offers larger diameter helical piles by special order with shaft sizes up to 12 inches. These larger diameter piles; e.g., 6.625-inch, 7-inch, 10-inch and 12-inch O.D., may be designed with external detached couplers, internal detached couplers or connections with complete joint penetration welds (*Figure 1.16*).

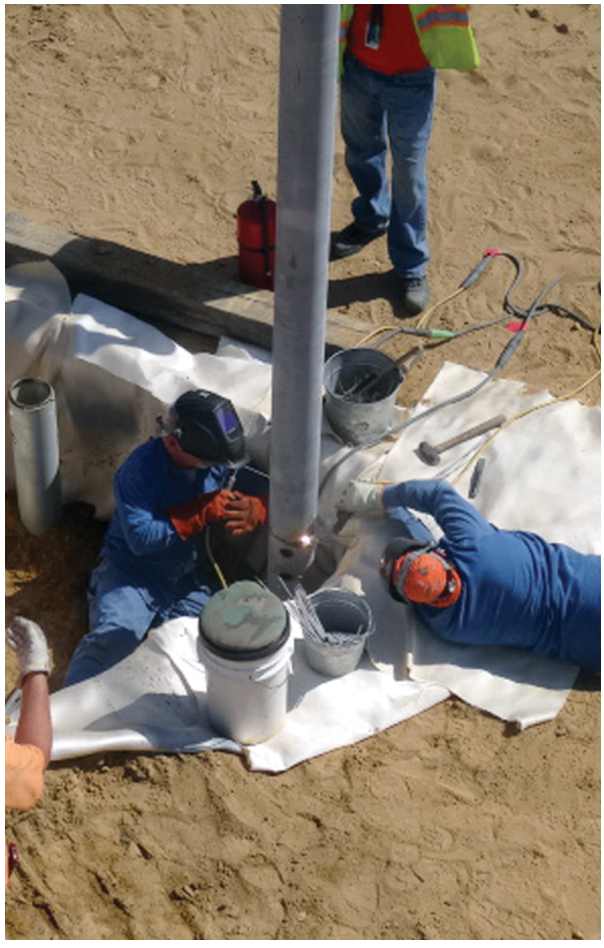

Figure 1.16 HP700 with complete joint penetration welds between sections

© 2024 Supportworks®
All Rights Reserved

All of these systems are designed and manufactured to strict tolerances to allow the pile shafts to be in direct contact when coupled, similar to *Figure 1.17*. Why is this important? Except for product with joint penetration welds at the couplings, the load path for piles under compression is then directly through the shafts of the extensions and lead section without having to pass through welds and bolts at each connection. The annular space between the pile shaft and coupler is also kept as tight as practical to maintain pile rigidity while also providing connections that are easily joined in the field (*Figure 1.18* and *Figure 1.19*).

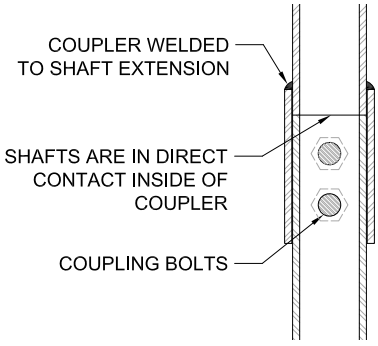

Figure 1.17 Coupler detail showing shaft contact within coupler

Figure 1.18 Foundation Supportworks' external welded coupler

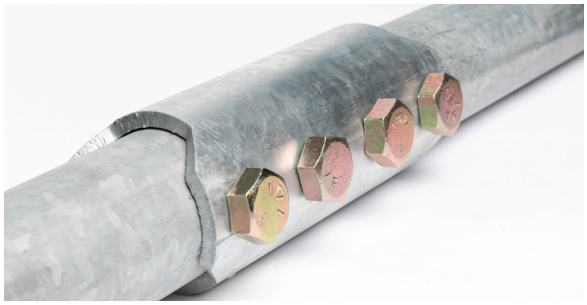

Figure 1.19 Foundation Supportworks' external detached coupler

The most common coupler detail for solid square shaft utilizes a forged and upset end (*Figure 1.20* and *Figure 1.21*). Cast detached couplers and weldments have also been used in lieu of the upsetting process. The upset end of square shaft is created in a similar manner as for the round shaft, except for forming a square socket connection. *Figure 1.22* clearly shows a comparison of coupling rigidity between a Foundation Supportworks external welded coupler for round shaft and a typical upset coupler for square shaft. A similar draping effect is typical for round shaft helical piles with upset couplers.

Foundation Supportworks engineers recommend that the design engineer request product drawings and review coupling details, tolerances and general fit-up prior to product selection. As you have read in the preceding paragraphs, seemingly equivalent products may actually turn out to have very different connection details, material properties and capacities.

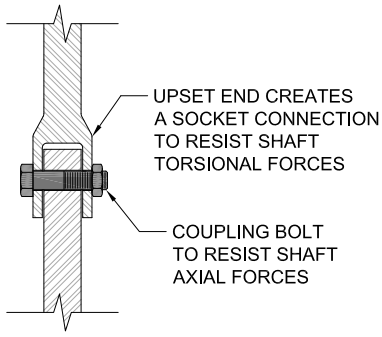

Figure 1.20 Schematic of square shaft forged and upset coupler

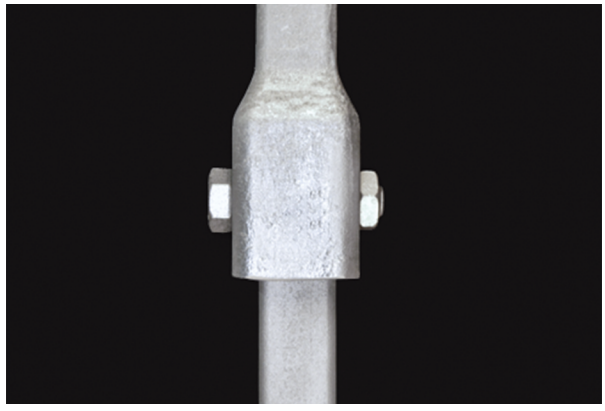

Figure 1.21 Square shaft forged and upset coupler

© 2024 Supportworks®
All Rights Reserved

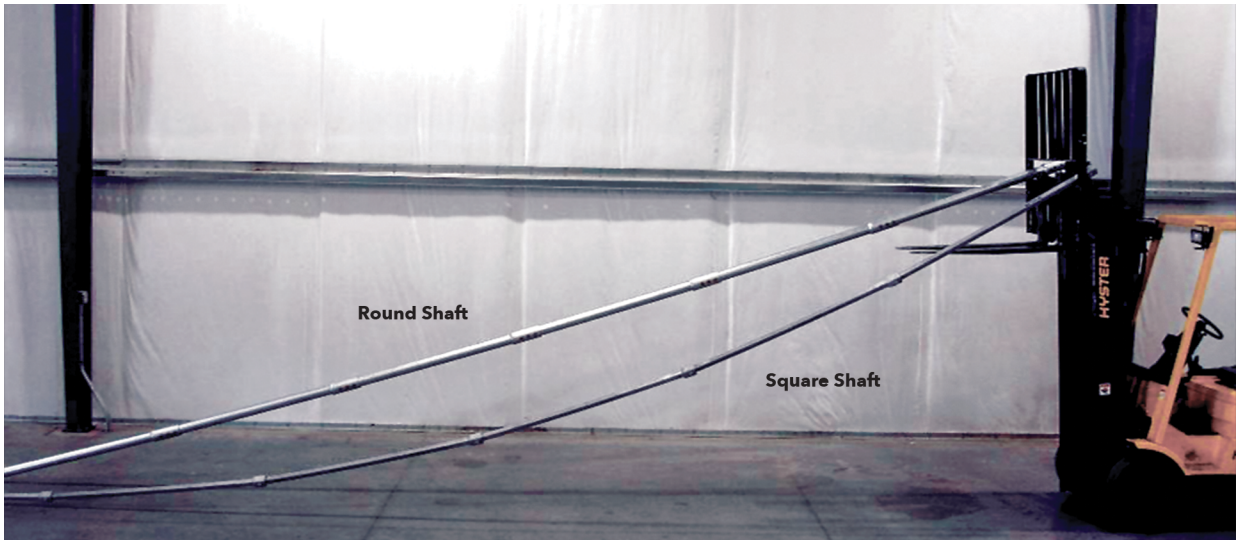

Figure 1.22 Coupler Rigidity Comparison: Foundation Supportworks' round-shaft external welded coupler vs. typical upset coupler for square shaft

1.3.2.2 Round vs. Square

Solid square shaft helical piles have been used successfully for decades in tension applications, e.g., as anchors, tiebacks and soil nails, and have proven to be a suitable and reliable support alternative for such projects. Not surprisingly, some manufacturers then adapted the use of square shaft helical products for the support of compression loads. There is much discussion amongst design professionals and even professionals within the helical pile industry about appropriate applications for square and round shaft products. With just a little understanding of the design and manufacturing of these two systems, it quickly becomes apparent for what applications the products are better suited.

Square shaft helical piles have traditionally been used in tension applications whereas hollow round shaft piles have been used in both tension and compression. In general, hollow round shafts are better suited for compression whereas solid square shaft may provide some advantages in certain tension applications. Project parameters and site-specific soil conditions vary, which may push the merits and advantages of one system over the other, and the design professional should select the product best suited for the project. Please contact the Foundation Supportworks Engineering Department with any questions regarding product selection.

Hollow round shaft helical piles are particularly suited to compression loading applications and offer the following advantages over comparably sized solid square shaft piles, i.e., piles with a similar amount of steel in the cross section.

- Round shaft helical piles, excluding those with upset couplers, generally have more rigid coupling connections. Square shaft helical piles typically have a socket-and-pin coupling which increases variances from straightness, introduces eccentricity to the system, and increases buckling potential (refer back to *Figure 1.22*). Use of square shaft piles in compression should be reserved for light compression load applications in soil profiles that offer sufficient lateral support, e.g., standard penetration test (SPT) N-values ≥ 10 blows/foot (American Society for Testing and Materials (ASTM) D1586), unless the couplers and extension sections are encased within a grout column. Refer to *Section 1.10* for a discussion about the Helicast® Grouted Helical Pile System.

© 2024 Supportworks®
All Rights Reserved

- As stated in the Coupler Detail section, Foundation Supportworks' round shaft helical piles are designed so the pile shafts are in direct contact within the coupling connections (refer back to *Figure 1.17*). The load path for round shaft piles in compression is then directly through the shafts without having to pass through the welds or bolts at each coupling. Shaft-to-shaft contact is more difficult to achieve within forged, upset couplers. For square shaft piles, both compression and tension loads are then transferred through the coupling bolts in double shear.

- The area of steel for a round shaft is located outward from the centroid, thereby providing a greater structural section modulus and a higher moment of inertia. In layman's terms, a round shaft pile is more resistant to bending (*Figure 1.23*). This is an important consideration for piles with unsupported lengths, piles penetrating loose or soft soils, or for piles that are eccentrically loaded such as in a retrofit application.

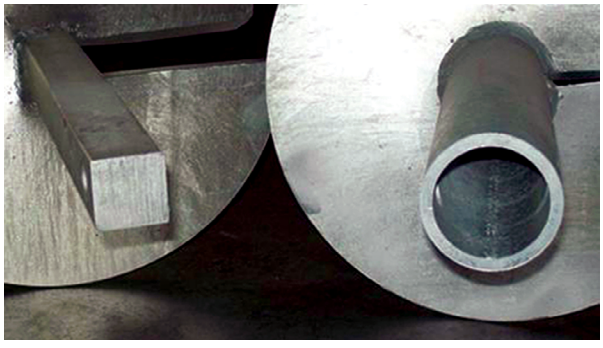

Figure 1.23 Section comparison between 2.875" diameter, 0.276" wall round shaft and 1.5" square shaft

- Round shaft typically has a higher installation torque rating than a comparably sized square shaft. For certain product comparisons, this results in higher pile capacities.

- Round shaft offers a higher lateral resistance with more shaft area exposed to the surrounding soil. If necessary, hollow round shafts can also be grout filled to further improve the pile stiffness.

Solid square shaft helical piles do offer some advantages over their round shaft counterparts.

- Square shaft is a more compact section than comparably sized round shafts, and therefore will achieve greater soil penetration for a given amount of torque. There is less skin friction during installation. This benefit is particularly important in tieback applications where the piles must be installed to certain embedment criteria as well as torque/capacity criteria.

- Square shaft, again due to its more compact shape, may penetrate through or into dense soils or soft or weathered bedrock layers more easily.

- Square shaft generally has less surface area exposed to corrosion and corrosion can only occur from the outside surface inward. Conversely, corrosion is possible for round shaft on both the outside and inside surfaces, although actually limited on the inside surfaces of closed pipe sections due to lack of oxygen. See *Appendix 1E* for additional information on corrosion.

- The degree of shaft twist may be considered as another rough indication of applied torque since permanent deformation begins within a known narrow range for each product. Contractors know they have passed this threshold when the shaft twist is not recovered after the installation torque is released. Although these observations can be used as a guide or point of reference during installation, Foundation Supportworks engineers do not recommend that shaft twist be used solely as a measure or estimate of applied torque.

- Square shaft can withstand more deformation/twist before shaft failure. Therefore, square shaft is much more forgiving during installation, allowing less experienced installers to decrease the applied torque before shaft damage may occur.

© 2024 Supportworks®
All Rights Reserved

1.3.3 Brackets

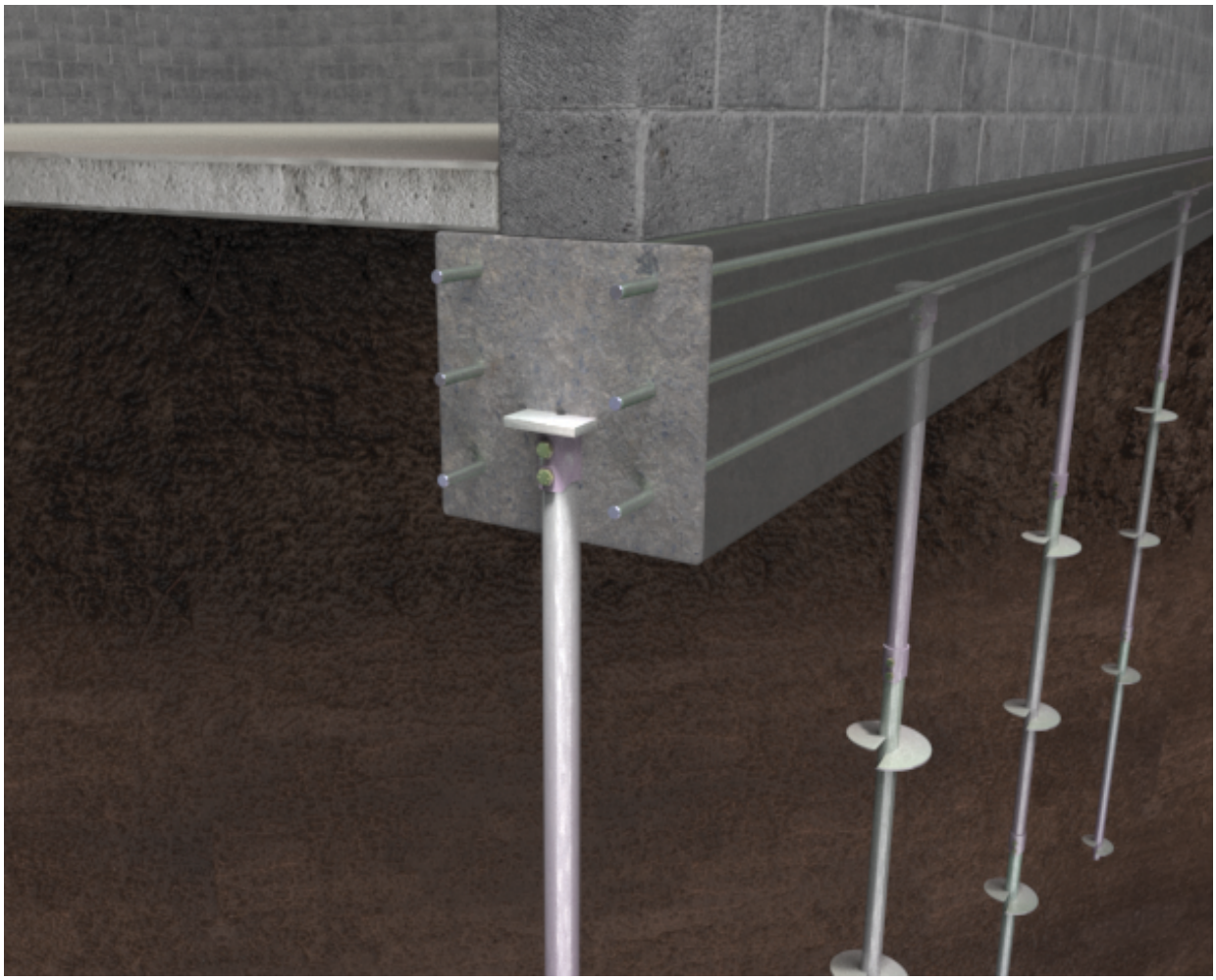

Figure 1.24 Rendering of new construction helical piles cast into a structural grade beam

A load transfer device (bracket) is used as a mechanism to transfer the structural load to the pile shaft. In new construction applications, a bracket, i.e., cap plate or T-cap, is welded or bolted to the top of the pile and then cast into the structural concrete of the grade beam or pile cap. New construction brackets often consist of round shaft sleeve (coupler) material with a flat plate welded to the top (*Figure 1.24* and *Figure 1.25*). Steel reinforcing bars may also be welded to the sleeve or plate to further engage the concrete. In compression load applications, the new construction bracket could theoretically be set on top of the pile without welding or bolting. However, Foundation Supportworks engineers still recommend that a positive connection be made so the bracket is not lifted or floated off the top of the pile during concrete placement operations. Welding or bolting of the bracket to the helical pile is required to resist tension loads.

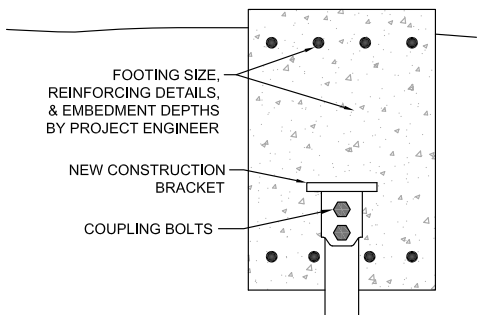

Figure 1.25 Schematic of new construction bracket

© 2024 Supportworks®
All Rights Reserved

Figure 1.26 Rendering of retrofit helical piers

Retrofit brackets are used for underpinning existing structures. These brackets are often referred to as side-load or "L" brackets and are typically designed to support the foundation from below (*Figure 1.26* and *Figure 1.27*). The horizontal leg of the "L" is positioned below the footing or foundation wall while the vertical leg is positioned against the vertical face of the footing or foundation wall. Footings that extend beyond the face of the foundation wall are typically notched-out at the bracket locations to create a smooth, flat surface and so the bracket is positioned as far as practical below the wall. Helical piers with retrofit brackets are often used to re-support existing structures that have undergone settlement. These same retrofit systems can be used to support additional loads transferred to an existing structure due to a building renovation or construction of an adjacent addition.

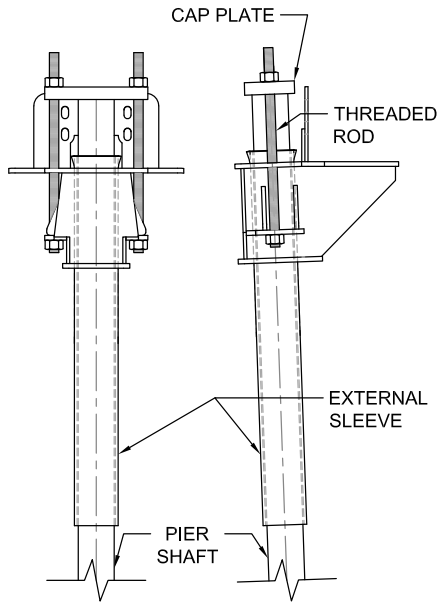

Figure 1.27 Retrofit bracket detail

© 2024 Supportworks®
All Rights Reserved

Figure 1.28 Rendering of helical tieback installation

Wall stabilization, earth retention, or embankment stabilization projects often utilize helical tiebacks or helical soil nails as system components (*Figure 1.28*). Helical tiebacks and helical soil nails may consist of either hollow round shaft or solid square shaft, although square shaft is more common due to its socket-and-pin style coupling (quick connection) and the ability to penetrate further into the soil with a similar amount of installation torque than a comparably-sized round shaft. The end of the shaft is typically fitted with an adaptor to transition the shaft to a threaded rod. Plate brackets can be cast into the concrete of a poured concrete wall or mounted to the face of an existing concrete wall, sheet-pile wall, or soldier beam and lagging wall. Waler beams may also be considered to more uniformly spread the tieback load to the wall (*Figure 1.29*).

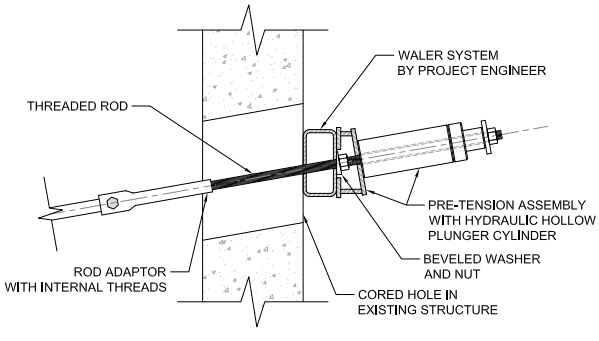

Figure 1.29 Schematic of helical tieback and pre-tension assembly

© 2024 Supportworks®
All Rights Reserved

Foundation Supportworks engineers recommend that all helical anchors and tiebacks (excluding soil nails) be pretensioned or proof tested following installation. Pretensioning to 1.0 to 1.33 times the service load minimizes deflection of the tiebacks and structure as the tiebacks are put into service and the soil strength around the helix plates is mobilized. Tiebacks installed to support existing walls are typically locked off at 0.75 to 1.1 times the service load after proof testing. Helical anchors and tiebacks to be cast into new concrete retaining walls may be completely unloaded, locked off with a modest seating load, or locked off near the service load after proof testing. The design professional should determine pretensioning and lock-off procedures based upon project conditions, anticipated tieback deflections and the estimated tolerable movement of the supported structure. Tiebacks can be pull tested or load tested to typically two (2) times the service load or more to identify the ultimate system capacity, better assess soil conditions and soil/anchor interaction, and validate design assumptions and parameters. Tiebacks that undergo load testing to greater than 1.5 times the service load, or failure, are generally considered sacrificial and should not be used as production tiebacks.

Specialty brackets may be required for certain projects. Some of the more common specialty brackets are often modified in their dimensions, material properties, material thicknesses, and/or connection details from project to project due to variations in the design loading and/or construction. Specialty brackets are available for deck supports, boardwalk projects (*Figure 1.30* and *Figure 1.31*), elevated structures in high tide or hurricane-prone areas, pipe buoyancy control, guy wires, tie downs, etc. Please contact the Foundation Supportworks Engineering Department with any questions regarding bracket details or availability.

Figure 1.30 Boardwalk supported on 2.375" O.D. vertical and battered helical piles

Figure 1.31 Custom saddle bracket connected with clevis to battered helical pile

© 2024 Supportworks®
All Rights Reserved

1.4 Benefits

The use of helical piles in construction continues to increase due to product and equipment versatility and the various benefits that the systems offer. Some of the benefits/advantages of helical piles include:

- **High capacity deep foundation alternative** – Allowable torque-correlated capacities of 100 kips may be achieved with helical shaft sizes of 4.5 inches in diameter. Even higher capacities may be achieved with larger shaft sections.

- **Predictable capacity** – With adequate soil information and designer experience, system capacities may be estimated very closely to capacities determined from full-scale load testing.

- **Lead sections and extensions can be configured to achieve design depth and capacity** – The design professional will choose the helical pile shaft size and helix plate configuration appropriate for the soil conditions. Additional helix plates may be considered on extensions when bearing in weaker soils. Special "V-style" helix plates, thicker helix plates and spiral-cut lead shaft tips are also available for penetrating and/or bearing in dense soils.

- **Well-established torque-to-capacity relationship** – Empirical torque factors have been established through years of product testing. Default torque-to-capacity ratios are listed in ICC-ES AC358 for conforming products.

- **All-weather installation** – Helical piles can be installed through inclement weather and freezing temperatures.

- **Installed in areas of limited or tight access** – Helical piles can be installed with hand-held equipment, mini-excavators, skid steers, backhoes and larger track equipment (*Figure 1.32*, *Figure 1.33* and *Figure 1.34*). The equipment and drive heads can be sized according to the project design loads as well as site access.

Figure 1.32 Skid steer installing helical piles within limited space at a substation

Figure 1.33 Mini-excavator lowered by crane into excavation to install helical tiebacks

Figure 1.34 Helical piles installed with hand-held equipment to support new elevator within existing school

© 2024 Supportworks®
All Rights Reserved

- **Low mobilization costs** – Helical piles can achieve moderate to high capacities, yet be installed with smaller equipment than most other deep foundation systems. This results in lower mobilization costs than other deep foundation alternatives, which in turn makes helical piles an economical solution for many projects.

- **Vibration-free installation** – Rotary installation of helical piles does not produce ground vibrations, unlike traditional driven piles or rammed aggregate soil improvement options.

- **Install quickly without generating spoils** – Helical piles do not auger soils to the surface. Therefore, there are no haul-off or disposal costs for spoils similar to auger-cast piles or drilled shafts. For contaminated sites, disposal and/or treatment of disturbed material can be extremely costly or make the project cost-prohibitive. Helical piles simply pass through contaminated soils and do not bring them to the surface.

- **Support of temporary structures** – Helical piles can be removed from the ground by reversing the installation process.

- **Load tests can be conducted immediately following installation** – Installed steel piles do not require a curing period like drilled shafts, auger-cast piles, or drilled and grouted micropiles. It is common to install a helical test pile and then test the pile later that day or the very next day. However, know that especially on clay sites or clayey sand sites, the soils will "heal" or "set up" around the shaft and helix plates over time. In general, within practical hold periods allowed by construction schedules, the longer the pile sits before testing, the higher the pile capacity for a given amount of deflection.

- **Foundation concrete can be poured immediately following installation** – Installed steel piles do not require a curing period like drilled shafts, auger-cast piles, or drilled and grouted micropiles. On schedule-sensitive projects, the contractor may place reinforcing steel and pour foundation concrete directly behind the helical pile installation.

- **Clean installation** – Installation of standard helical piles, helical tiebacks and helical soil nails does not include concrete or grout, thereby minimizing equipment, vehicles and mess on the construction site.

1.5 Limitations

Helical piles will not be the best suited, most economical deep foundation option for every project or soil profile. In the same way, other deep foundation alternatives such as driven piles, auger-cast piles, drilled shafts, and drilled and grouted micropiles, have their own benefits and limitations and may be more or less suited for certain project conditions.

- Standard helical piles, tiebacks and soil nails are steel foundation elements that generate capacity through interaction with the soil in which they are embedded. AC358 defines corrosive soil environments by: (1) soil resistivity less than 1,000 ohm-cm; (2) soil pH less than 5.5; (3) soils with high organic content; (4) soil sulfate concentrations greater than 1,000 ppm; (5) soils located in landfills, or (6) soil containing mine waste. In such environments, the steel can be protected with a hot-dip galvanized zinc coating or with other measures such as sacrificial anodes. A site-specific evaluation of the soil can be conducted in order to determine an appropriate level of protection. Refer to *Appendix 1E* for additional information about corrosion.

© 2024 Supportworks®
All Rights Reserved

- Helical piles may not easily penetrate construction debris, wood, dense gravelly soils, or soils containing large, hard fractions such as cobbles and boulders. These materials could hinder installation or cause damage to the helical pile shaft or helix plates. When such conditions exist, a thicker or larger pile shaft may be considered to resist impact loading and torque spikes. Thicker helix plates with a V-style cut could more easily penetrate dense soils and, again, resist impact loading. A solid square bar "stinger" lead section coupled immediately to round shaft extensions may also be considered to pass through or penetrate into dense soil (*Figure 1.35*). The use of a spiral-cut tip may also assist penetration through or into dense soils (refer back to *Figure 1.9*). Where large obstructions are encountered, the helical piles may have to be offset from plan locations. The project engineer should first be notified to determine if other piles should be relocated or if additional piles will be required.

- Helical piles will not typically penetrate hard rock, defined by auger refusal by the drill rig or SPT N-values ≥ 50 blows/6 inches of sampler penetration (ASTM D1586). Helical piles may penetrate into hard clay, dense sand and soft or weathered bedrock; however, larger installation equipment is generally recommended to provide "crowd" or axial force on the pile during advancement into these soils. A square bar stinger lead section or a spiral-cut lead tip on hollow round shaft may again be considered along with the larger installation equipment.

Figure 1.35 Combination pile with HA175 stinger coupled immediately to 3.5" O.D. shaft

- The slenderness of helical pile shafts and their limited exposed area to the surrounding soil does not allow for generation of high lateral capacities. In competent soils, ultimate lateral capacities may range from less than 2 kips to more than 6 kips for 2.875-inch to 3.5-inch O.D. round shafts. Higher capacities may be achieved as the central shaft size of the pile increases. These capacities are typically achieved with lateral deflections of one inch or more. Where higher lateral loads are anticipated, or lower deflection criteria required, lateral loads could be resisted by; (1) extending the structural concrete grade beams or pile caps deeper to take advantage of the passive resistance of the soil, (2) incorporating battered helical piles into the foundation design, (3) using structural elements in the current design, such as floor slabs with hairpin bars, or (4) incorporating other structural elements to create fully braced conditions. Site-specific lateral load tests can be completed to document the lateral capacity to deflection relationship prior to installing production piles.

© 2024 Supportworks®
All Rights Reserved

1.6 Design Considerations

1.6.1 Spacing & Depth

Helical piles are designed such that most of the axial capacity of the pile is generated through bearing of the helix plates against the soil. The helix plates are typically spaced three diameters apart along the pile shaft to prevent one plate from contributing significant stress to the bearing soil of the adjacent plate. Significant stress influence is limited to a "bulb" of soil within about two helix diameters from the bearing surface in the axial direction and one helix diameter from the center of the pile shaft in the lateral direction. Each helix plate therefore acts independently in bearing along the pile shaft (*Figure 1.36*). Helical piles designed with helix plate spacing in accordance with AC358 could, therefore, use either the Individual Bearing or Cylindrical Shear Methods for calculating capacity. Helical piles manufactured with more closely-spaced helix plates should consider the Cylindrical Shear Method only. These design methods are presented in *Section 1.7*.

Axially loaded helical piles shall have a center-to-center spacing at the helix depth of at least three (3) times the diameter of the largest helix plate to avoid group efficiency effects (ICC-ES AC358). The tops of the piles may be closer at the ground surface, but battered away from each other in order to meet the AC358 spacing criteria at the helix bearing depth.

The center-to-center spacing of laterally loaded piles shall be considered both at the ground surface and the depth of helix plate bearing. Center-to-center spacing at the ground surface shall be at least eight (8) times the diameter of the pile shaft. Spacing between helix plates shall not be less than three (3) times the diameter of the largest helix plate measured from the edge of the helix plate to the edge of the adjacent helical pile plate, or four (4) diameters where the spacing is measured from the center to center of adjacent pile plates (ICC-ES AC358). If these criteria are not met, an analysis should be completed to determine if there should be a reduction in the lateral capacity per pile.

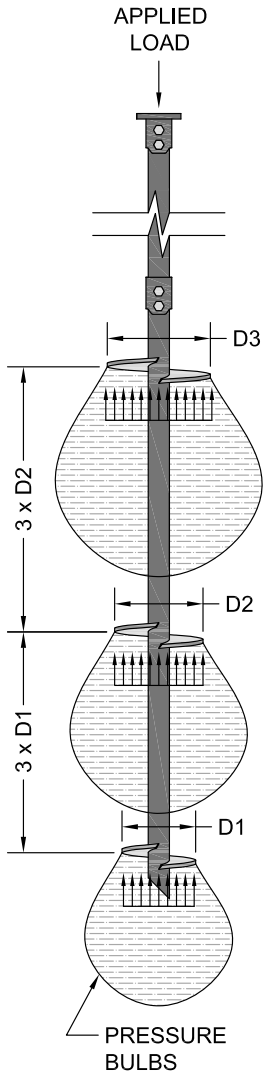

Figure 1.36 Helix plate spacing with bulbs of significant stress influence

For tension applications, the uppermost helix plate shall be installed to a depth at least twelve (12) diameters below the ground surface (ICC-ES AC358). Default torque correlation factors (capacity to torque ratios)

© 2024 Supportworks®
All Rights Reserved

have been verified for conforming systems tested and evaluated in tension applications at and below these depths. Design professionals may still determine that shallower installations are appropriate for the project given the site-specific soil conditions.

The uppermost helix plate shall be embedded in the ground to a depth of at least five (5) diameters to create a deep foundation bearing condition. The upper helix plate shall also be located below the depth of seasonal frost penetration and below the "active zone", i.e., the depth of soil that undergoes seasonal volume changes with changes in moisture content. The minimum depth of the uppermost helix plate would therefore be determined from the greatest of these values, or deeper if required to achieve adequate bearing for the project.

Expansive soils are prevalent in many regions of the United States and Canada with varying degrees of shrink/swell potential. Volumetric changes (shrink/swell) occur in expansive soils from seasonal fluctuations of the natural moisture content. As mentioned above, the depth of soil that is affected by changes in seasonal moisture is commonly referred to as the "active zone" or the "depth of wetting". Below this depth, the soil moisture content is presumed to remain relatively constant, thereby limiting any volumetric changes within the deeper strata. The geotechnical investigation may identify layers of expansive soils and swell testing may be performed on soil samples to determine the potential vertical rise (PVR) and swell pressure of the expansive zone upon wetting. When helical piles are installed in expansive soil profiles, it is important to advance the helix plates to depths below the active zone to limit pile and structure movement.

If expansive soils are found to exist under shallow footings or pile caps, swell pressures determined from testing can be used to estimate the uplift force on the foundation. This potential uplift pressure, or force, must be considered when designing helical piles for both retrofit and new construction applications. In new construction applications, the helical piles and connections to the structure, along with the structure itself, may be designed to resist the uplift forces. In retrofit applications, modifications to the bracket/pile/structure connections may be necessary to provide uplift restraint.

It may also be possible to design the foundation system so that the dead loads from the structure produce bearing pressures that exceed the swell pressures and resulting forces from the underlying soils. When this is not possible and a deep foundation is required, void form is often used in new construction to provide a gap between the soil and pile supported grade beams and pile caps. This would allow the soil to expand several inches upon wetting without inducing an uplift force on the foundation system. Void form typically consists of rigid cardboard box shapes that can support the weight of the new concrete, but then weakens over time as it absorbs moisture. In retrofit applications, the contractor may first support and level the existing structure with helical piers, and then excavate a void between the concrete footing and the soil. If expansive soils are a concern, at a minimum, the geotechnical engineer should provide guidance regarding the depth of wetting, PVR and swell pressures that may be applied to the foundation. Any resulting uplift forces should be considered in the helical pile design, and additional appropriate measures taken.

© 2024 Supportworks®
All Rights Reserved

1.6.2 New Construction vs. Retrofit

New construction helical piles are generally designed to be concentrically loaded; i.e., the load is transferred axially down the pile shaft without inducing bending. These piles are commonly installed longitudinally along a grade beam and directly below the wall load, or multiple piles may be incorporated into a rigid pile cap to support and balance a column load. New construction piles that are concentrically loaded will behave purely as columns and will be capable of supporting loads up to the maximum allowable mechanical capacity per American Institute of Steel Construction (AISC) design methods. The maximum allowable mechanical capacity should consider the bracket capacity, the shaft and coupling capacity, and the helix plate capacity. The connection to the structure must also be designed appropriately with proper pile head embedment in the concrete, concrete strength, reinforcing steel, etc. Consideration of the maximum allowable mechanical capacity assumes that the soil is also capable of supporting the load and that the shaft is laterally supported or braced along its entire length. In practice, the maximum allowable mechanical capacity of the pile is seldom achieved as the pile capacity is typically limited by soil strength.

Helical piles used in retrofit applications utilize side-load brackets that introduce eccentricity to the system. The pile shaft is not located directly under the footing or structural load. Therefore, retrofit piering systems are eccentrically loaded and must be designed to resist the bending forces generated by this loading condition (*Figure 1.37*).

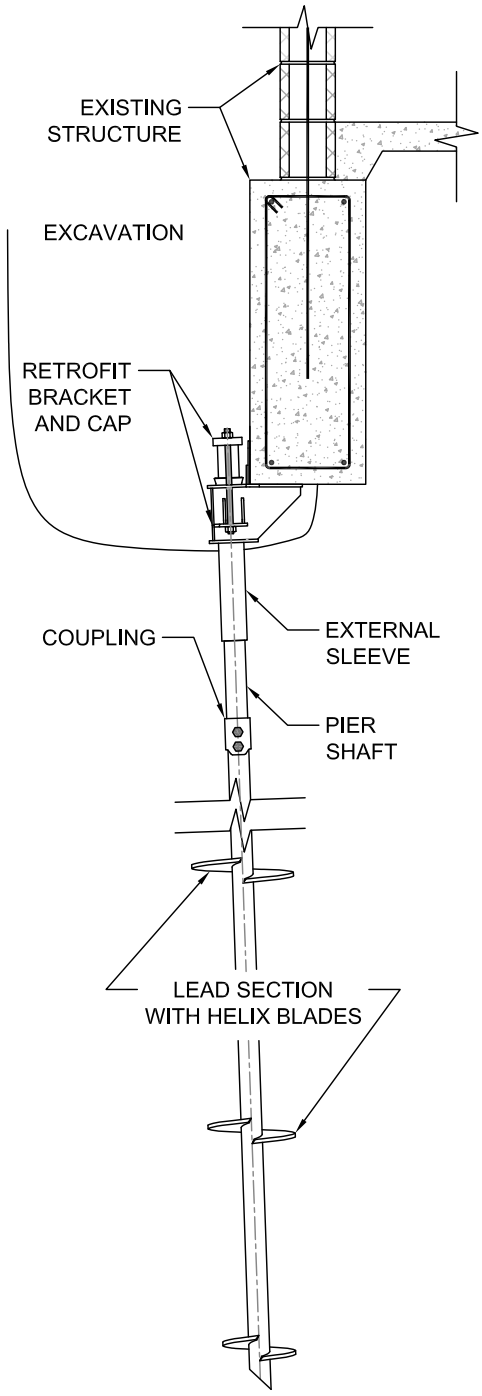

Figure 1.37 Schematic of retrofit helical pier installation

© 2024 Supportworks®
All Rights Reserved

Most helical piles used in residential and commercial retrofit applications have outer dimensions of 3.5 inches or less. These sections are therefore very sensitive to the bending moments introduced by this eccentricity, thereby reducing the capacity of the pier to carry axial load. The retrofit pier does not act as a pure column as in a new construction application, but rather as a beam-column that must resist both axial load and bending. Herein lies the problem. The pier shaft has quantifiable axial and bending capacities, which when considered independent of the other, may be significant. However, when both of these forces are applied concurrently to the same section, both the allowable compressive capacity and allowable bending capacity are reduced. In fact, according to AISC design methods, the allowable compressive capacity may be reduced by one-half or more for certain pile sections when applying a bending moment generated by an eccentricity of only 2 inches, which is less than what would be considered typical for most retrofit piering systems.

Foundation Supportworks engineers address the issue of retrofit helical pier eccentricities in either of two ways. The first is to increase the stiffness of the pier system and then allow more of the resulting bending forces to be transferred through the pier system itself. This is accomplished by incorporating an external sleeve to resist the bending forces. The external sleeve extends through and below the foundation bracket to essentially create a bracket that is 30 inches tall. Since the external sleeve and the pier shaft are confined by the earth, the bending moment dissipates quickly into the surrounding soils and generally within the first few feet. The depth at which the bending moment dissipates is a function of the soil strength and is greater in soft soils and less in stiff soils. With the external sleeve present to resist most of the bending forces, the capacity of the pier section is preserved to resist the axial compressive forces.

The second way to address retrofit helical pier eccentricities is to increase rigidity of the bracket connection to the foundation. With an adequately designed rigid connection, much of the eccentricity is transferred back to the foundation and less to the pier section. This connection detail typically consists of several strategically located, deeply embedded adhesive anchors.

1.7 Helical Bearing Capacity Design Overview

There are three common methods for predicting helical pile capacity; the Individual Bearing Method, the Cylindrical Shear Method and the Torque Correlation Method. The first two methods are rooted in traditional geotechnical methodology, slightly modified with empirical data. The Individual Bearing and Cylindrical Shear Methods are generally used to calculate or estimate the pile capacity during the design phase. The Individual Bearing Method relies on each helix plate to act independently in bearing with no overlap of significant stress influence between adjacent helices. The Cylindrical Shear Method is applicable for multi-helix piles and assumes that the top or bottom helix plate acts in bearing (depending upon direction of loading) and a cylindrical shear surface develops between the top and bottom helix. The helical pile designer must have adequate subsurface information or a thorough knowledge of the local soil conditions in order to select the geotechnical parameters for use in these design equations.

The Torque Correlation Method is fully empirical and generally used to confirm or verify capacity during field installation. The Torque Correlation Method uses the linear relationship between installation torque and capacity, i.e., the capacity is calculated as the product

© 2024 Supportworks®
All Rights Reserved

of the installation torque and an empirical torque factor established through decades of full-scale load testing. The Torque Correlation Method has even been used on projects with insufficient soil information as the sole determination of pile capacity. However, there are increased risks with relying on this method alone due to potential weak soil layers that may be present below the bottom of pile elevation.

Foundation Supportworks engineers recommend that subsurface information be determined to a depth of at least 5 to 10 feet below the anticipated helical pile depth. Soil borings should be extended into competent bearing soils capable of supporting the service loads with an adequate factor of safety. Helical test probes may also be considered to back-calculate the soil shear strength from the pile installation torque determined from calibrated equipment. Helical test probes should be extended to depths at least 10 feet below the anticipated depths of the helical production piles. Refer to "Geotechnical Investigation Guidelines for Helical Pile, Helical Anchor and Push Pier Design" in Appendix 1F for additional information.

The helix plate spacing along the pile shaft can control whether a helical pile acts in individual bearing or cylindrical shear. Closely-spaced helix plates will exhibit cylindrical shear behavior while well-spaced helix plates will typically fail the soil in individual bearing. Research has shown that the transition between cylindrical shear and individual bearing generally occurs at helix spacings of 2.5D to 3.5D, where D is the diameter of the lead helix plate. Within that range, either method may be considered applicable. Foundation Supportworks' helical piles, tiebacks and soil nails are generally manufactured with helix plate spacings of 3.0D.

The Individual Bearing Method essentially utilizes the traditional bearing capacity equation introduced by Carl Terzaghi in 1943 to determine the bearing capacity of shallow spread footings. This method is also used to determine the end-bearing capacity of deep foundations. The other two capacity prediction methods (cylindrical shear and torque correlation) were developed specifically for helical piles used in tension load applications. These methods were then later considered to predict compression capacity as well. The use of the Cylindrical Shear Method and Torque Correlation Method for compression capacity determination may then be considered conservative since at least one helix plate (bottom plate) is bearing against undisturbed soil, while in tension applications, all helix plates are bearing against partially disturbed soil.

A factor of safety of 2.0 is typically used to calculate the allowable soil bearing capacity of a helical pile if torque is monitored during the helical pile installation. Higher or lower factors of safety may also be considered at the discretion of the helical pile designer or as dictated by local code requirements. Lower factors of safety may be considered for non-critical structures or temporary applications. Higher factors of safety may be considered for critical structures, structures sensitive to movement, or where soil conditions suggest that creep movement may be a concern. Total stress parameters should be used for short-term and transient load applications and effective stress parameters should be used for long-term, permanent load applications.

Like other deep foundation alternatives, there are many factors to be considered in designing a helical pile foundation. Foundation Supportworks engineers recommend that helical pile design be completed by an experienced geotechnical engineer or other qualified design professional.

© 2024 Supportworks®
All Rights Reserved

1.7.1 Individual Bearing Method

The Individual Bearing Method (Adams and Klym, 1972; Hoyt and Clemence, 1989) states that the ultimate pile capacity is equal to the sum of the individual helix plate capacities. Spacing of the helix plates along the shaft is generally three times the diameter of the leading plate, the uppermost helix plate is embedded to a depth of at least five diameters, and skin friction along the shaft is generally ignored for shaft sizes less than 6 inches in outside diameter. *Figure 1.38* illustrates the load transfer mechanism for the Individual Bearing Method in compression loading.

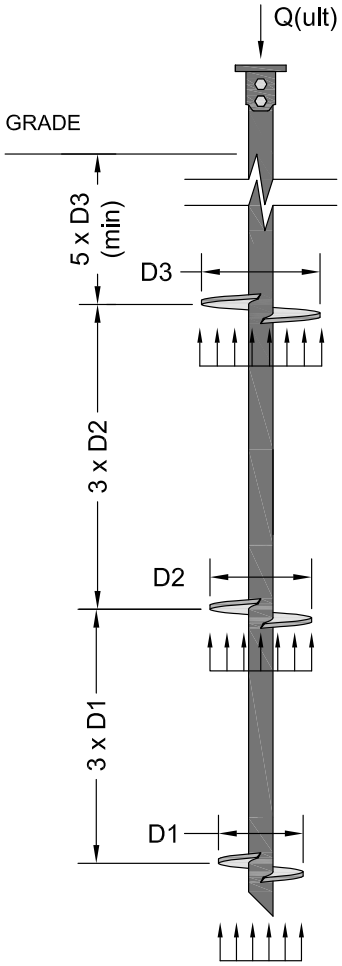

Figure 1.38 Individual Bearing Method

Helical pile capacity by the Individual Bearing Method can be calculated from:

$$Q_u = \sum A_h(cN_c + q'N_q + 0.5\gamma BN_\gamma)$$

Where,

Q_u	=	Ultimate Pile Capacity (lb)
c	=	Cohesion at Helix Depth (lb/ft²)
q'	=	Effective Vertical Overburden Stress at Helix Depth (lb/ft²)
γ	=	Soil Unit Weight (lb/ft³)
B	=	Diameter of Helix Plate (ft)
A_h	=	Area of Helix Plate (ft²)
N_c, N_q, N_γ	=	Dimensionless Bearing Capacity Factors

The last part of the equation that includes the helix diameter (B) is often ignored in the calculation of end-bearing capacity of deep foundations. The diameter or width of the pile is relatively small and therefore this portion of the equation contributes little to the overall pile capacity. With that portion of the equation conservatively ignored, the equation further simplifies to:

$$Q_u = \sum A_h(cN_c + q'N_q)$$

For purely cohesive soils with $\Phi = 0$ and $c = s_u$ (soil undrained shear strength), $N_c \approx 9$ and $N_q = 1$. The equation can conservatively be rewritten again as:

$$Q_u = \sum A_h(9c)$$

For purely granular (frictional) soils with $c = 0$, the equation can be rewritten as:

$$Q_u = \sum A_h(q'N_q)$$

© 2024 Supportworks®
All Rights Reserved

Bearing capacity factors N_c and N_q are typically provided in foundation design textbooks and these values may not be appropriate for use in helical pile design. Research has shown that N_q may not only be a function of the soil friction angle, but also pile embedment depth, pile type and installation method (drilled, driven, etc.). Unfortunately, there has been little research to investigate how N_q might vary for helical piles. Since helical piles are generally considered displacement piles due to the lack of spoils during installation, one could theorize similar N_q values as determined by Meyerhof (1976) for driven piles, with a reduction to account for soil disturbance created by the helix plates. Foundation Supportworks engineers recommend N_c and N_q bearing capacity factors calculated by the following equations and shown graphically in *Figure 1.39*:

$$N_c = (N_q - 1)\cot\Phi \geq 9$$

$$N_q = 1 + 0.56(12\Phi)^{\Phi/54}$$

These values of N_c and N_q are slightly lower and therefore more conservative than the values typically provided in textbooks.

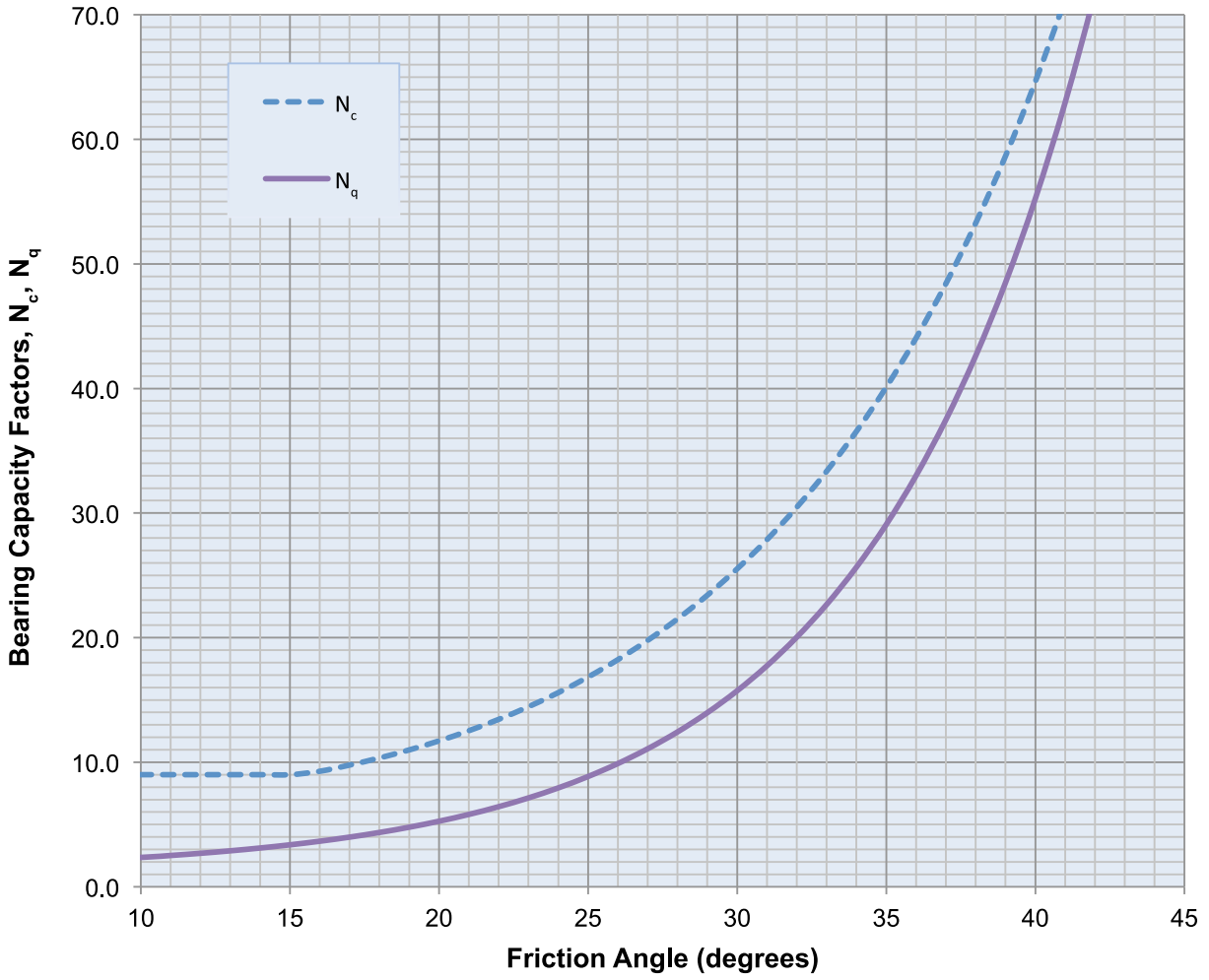

Figure 1.39 Recommended Bearing Capacity Factors N_c and N_q versus Soil Friction Angle

© 2024 Supportworks®
All Rights Reserved

1.7.1.1 Critical Depth

In granular soils the helical pile capacity is largely a function of the vertical effective overburden stress at the helix plate depth. Therefore, one may expect that the pile capacity would increase without bound as the effective stress increases with increasing pile depth. According to the Individual Bearing and Cylindrical Shear Method equations, the helical pile capacity should increase by simply extending the pile deeper into granular soils. In reality, there is a critical depth within uniform granular soils where a further increase in vertical effective stress results in little to no increase in the end-bearing capacity of the pile. Certainly, if the strength of the granular soil increases with depth below the critical depth, you would expect an increase in pile capacity, but not due to an increase in the overburden stress. This concept is well documented in many foundation design textbooks and design manuals.

Critical depth may range from 10D to 40D (where D is the largest helix plate diameter), depending upon the relative density and position of the water table. Foundation Supportworks engineers recommend critical depths of 20D to 30D be considered for design purposes. For example, if the helix plate depth is greater than an assumed critical depth of 20D, limit the vertical effective stress at the helix plate to that value corresponding to the critical depth of 20D.

1.7.2 Cylindrical Shear Method

The design equation for determining helical pile capacity by the Cylindrical Shear Method was originally developed by Mitsch and Clemence (1985) and later modified for simplicity. The Cylindrical Shear Method assumes the development of a soil friction column (cylinder) between the upper and lower helix plates along with individual bearing of either the upper or lower helix, depending upon loading direction. The ultimate bearing capacity is then determined by the summation of shear strength of the soil cylinder, shaft adhesion/friction and end bearing of either the upper or lower helix. For deep cylindrical shear failure to occur, spacing of the helix plates along the shaft is generally less than or equal to three times the diameter of the leading plate and the uppermost helix plate is embedded to a depth of at least five diameters. Skin friction along the shaft is generally ignored for shaft sizes less than 6 inches in outside diameter. *Figure 1.40* illustrates the load transfer mechanism for the Cylindrical Shear Method in compression loading.

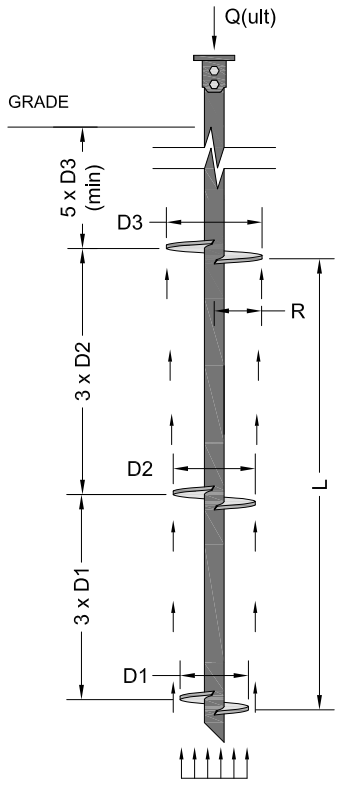

Figure 1.40 Cylindrical Shear Method

© 2024 Supportworks®
All Rights Reserved

The helical pile capacity by the Cylindrical Shear Method can be calculated as:

$$Q_u = 2\pi RL(c + K_o q' \tan\Phi) + A_h(cN_c + q'N_q)$$

Where,

Q_u	=	Ultimate Pile Capacity (lb)
R	=	Average Helix Radius (ft)
L	=	Total Spacing Between All Helix Plates (ft)
c	=	Cohesion at the Helix Depth (lb/ft²)
K_o	=	Dimensionless At-Rest Earth Pressure Coefficient
Φ	=	Soil Friction Angle (degrees)
A_h	=	Area of the Top or Bottom Helix Plate (ft²)
q'	=	Effective Vertical Overburden Stress at A_h (lb/ft²)
N_c, N_q	=	Dimensionless Bearing Capacity Factors

Refer to Section 1.7.1 for discussions regarding bearing capacity factors and critical depth.

Foundation Supportworks engineers promote the use of the Individual Bearing Method for determination of pile capacity when helix spacings are ≥ 3D due to its relative simplicity and since the original form from which this method is derived is already widely accepted by the geotechnical engineering community.

1.7.3 Torque Correlation Method

The Torque Correlation Method has become a well-documented and accepted method for estimating or verifying helical pile capacity during installation. In simple terms, the torsional resistance generated during helical pile installation is a measure of soil undrained shear strength and can be related to the bearing capacity of the pile with the following equation:

$$Q_u = K_t \cdot T$$

Where,

Q_u	=	Ultimate Pile Capacity (lb)
K_t	=	Empirical Torque Correlation Factor (ft^{-1})
T	=	Final Installation Torque (ft-lb)

The relationship between installation torque and helical pile capacity was generally considered proprietary information by helical foundation manufacturers until the results of an extensive study performed by Hoyt and Clemence were released in the late 1980s (Hoyt and Clemence, 1989). The Hoyt and Clemence study included tension load test results for 91 multi-helix piles at 24 different sites with varying soil conditions, embedment depths, shaft sizes, helix spacings and number of helices. The helix plate spacing along the pile shafts varied from 1.5D to 4.5D and the number of helices varied from 2 to 14 with the diameters ranging from 6 to 20 inches. Shaft sizes consisted of 1.5, 1.75 and 2.0-inch square and 3.5 and 8.625-inch round. The load test results

© 2024 Supportworks®
All Rights Reserved

were compared with capacity predictions using the Torque Correlation Method, the Individual Bearing Method and the Cylindrical Shear Method (Mitsch and Clemence, 1985). The statistical results of this study show that the Torque Correlation Method is the more precise predictor of capacity of the three methods. The researchers recommended torque correlation factors (K_t) of 10 ft^{-1} for all size square bar shafts and round shafts less than 3.5 inches in diameter, K_t of 7 ft^{-1} for 3.5-inch diameter round shafts and K_t of 3 ft^{-1} for 8.625-inch diameter round shafts. It must be recognized that the recommended K_t values in the Hoyt and Clemence paper were based on a wide range of soil conditions and pile configurations (configurations that may not be considered as conforming products per ICC-ES AC358) and should only be used with confirmation from site-specific, full-scale load testing. Some of the recommended Hoyt and Clemence K_t values differ from the default values provided in ICC-ES AC358. Notable exceptions include K_t values for square shaft piles larger than 1.75 inches and less than or equal to 3 inches. In these cases, AC358 recommends K_t values lower than 10 ft^{-1}, determined from an equation that considers the diagonal dimension of the shaft as the "effective diameter." These K_t values for larger square shaft are then comparable to their round shaft counterparts.

ICC-ES AC358 recognizes the following helical pile shaft sizes and respective K_t factors for conforming systems, since the installation torque-to-capacity ratios have been established with documented research:

- 1.5 and 1.75-inch square shaft $K_t = 10\ ft^{-1}$
- 2.375-inch O.D. round $K_t = 10\ ft^{-1}$
- 2.875-inch O.D. round $K_t = 9\ ft^{-1}$
- 3.5-inch O.D. round $K_t = 7\ ft^{-1}$
- 4.5-inch O.D. round $K_t = 5.5\ ft^{-1}$

The K_t factors above may be considered conservative for most applications, and even though they are often presented as constant values, K_t can vary depending upon the soil conditions; i.e., K_t factors are generally higher in well-graded sand and gravel versus silt and clay soils. K_t is also inversely proportional to the shaft dimension/diameter as shown above.

For tension applications, the uppermost helix plate shall be installed to a depth at least twelve (12) diameters below the ground surface (ICC-ES AC358). Default torque correlation factors have been verified for conforming systems tested and evaluated in tension applications at and below these depths. Design professionals may still determine that shallower installations are appropriate for the project given the site-specific soil conditions.

Factors that affect installation torque may also have an effect on the resultant K_t determined from a field load test. In addition to soil type and shaft dimension, studies have indicated that other factors such as the number of helix plates, helix thickness, helix pitch, helix spacing along the shaft, helix diameter, depth of pile embedment, applied downward force during installation (crowd), and test load direction may have an effect on installation torque and/or the resultant K_t. Other studies have discounted some or most of these factors as inconsequential.

The use of uncalibrated torque monitoring equipment or uncertified drive heads will likely affect the K_t determined from field load testing. The helical pile industry has long used the differential pressure across the drive head for correlation to installation torque. The installation torque is then correlated to pile capacity. In other words, the differential pressure across the drive head is commonly used to determine the pile capacity. The current state-of-practice involves using a gear motor multiplier (GMM) to convert from differential pressure to torque. The GMMs are provided by the drive head manufacturers based on theoretical equations and will vary with the planetary gear ratio, hydraulic motor displacement and motor efficiency. Drive head manufacturers typically show a linear fit between the differential pressure and output torque with no scaling effect. Research has shown that the drive head differential pressure to torque relationship

© 2024 Supportworks®
All Rights Reserved

is generally linear, however, there is a scaling adjustment needed (Deardorff 2007). This results in a range of GMMs from low to high differential pressure. The discrepancy between actual installation torque and torque determined by correlation to differential pressure is highest at low differential pressures. This difference often decreases steadily as the differential pressure increases up to the point of maximum drive head efficiency. Therefore, it is highly recommended that drive heads be certified on an annual basis, or whenever changes occur to alter their performance, in order to establish their true differential pressure to torque relationship. Calibrated in-line torque monitoring devices may also be used as an alternative to having the drive heads certified.

Finally, the installation practices of the specialty contractor and the quality control of the helical pile manufacturer will affect K_t. Helical piles should ideally be installed at a rate equal to the pitch of the helix plate (3 inches per revolution) with no more than 25 revolutions per minute (rpm). The installation rate should be reduced to about 10 rpm during final seating of the helical plates. The rate of advancement can be controlled by the installing contractor by adjusting the speed and downward force (crowd) as different soil layers are encountered and penetrated. The helical pile manufacturer should provide a helix plate geometry that is a true ramped-spiral with uniform pitch. The geometry of the helix plate is instrumental in providing the downward thrust or pull into the ground and should be controlled to increase the installation efficiency and subsequent K_t. Refer to *Section 1.3.1* for an in-depth discussion about helix plate geometry. Proper installation procedures and well-formed helix plates are critical to minimize soil disturbance.

© 2024 Supportworks®
All Rights Reserved

1.8 Helical Tiebacks

Helical anchors/tiebacks are commonly used in tension applications to provide either temporary or permanent lateral or tie-down support for applications including:

- Earth retention systems such as concrete retaining walls, soldier pile and timber lagging, and sheet piling (*Figure 1.42* and *Figure 1.43*)
- Seismic loading restraint for foundation uplift and lateral support systems
- Guy anchor support for power line and communication towers
- Seawalls and marine bulkhead support (*Figure 1.44*)

Helical tiebacks are manufactured with similar helix plate sizes and helix spacing as helical piles installed vertically to support foundation loads. Tiebacks differ from helical piles in that they are typically installed in a horizontal to 45-degree downward from horizontal orientation to laterally support the tops of earth retaining structures. Helix plates are typically limited to the lead section or the lead and first extension of the tieback. The helix plate design depends on the soil strength parameters and the required capacity. Multi-helix leads generally consist of increasing plate sizes from the tip. Helical tiebacks may consist of either hollow round shaft or solid square shaft, although square is more common due to its socket-and-pin style coupling (quicker and easier to connect) and the ability to penetrate further into the soil with a similar installation torque than a comparably-sized round shaft. The end of the shaft is typically coupled to an adaptor that transitions the shaft to threaded rod (refer back to *Figure 1.29*).

Figure 1.42 Rendering of helical tieback installation for soldier pile and timber lagging wall

Figure 1.43 Multi-tier helical tieback installation to support sheet pile wall

Figure 1.44 Helical tiebacks stabilize marina seawall

© 2024 Supportworks®
All Rights Reserved

Both the Individual Bearing Method and the Cylindrical Shear Method are appropriate for determining helical tieback capacity. The Torque Correlation Method is commonly used to verify capacity during tieback installation. These methods are discussed in *Section 1.7*.

Helical tiebacks are often used to stabilize existing earth retaining structures that have experienced excessive movement, e.g., walls that are cracked, leaning and/or bowing (*Figure 1.45* and *Figure 1.46*). The wall distress may be a result of changes in soil moisture conditions, rise in groundwater levels, plugging of the wall drainage system over time, plumbing leaks, expansive clay soils, frost jacking, or surcharge loads above the wall.

Figure 1.45 Helical tiebacks stabilize sheet pile wall below historic home

Figure 1.46 Helical tiebacks and tube steel walers stabilize concrete retaining wall

© 2024 Supportworks®
All Rights Reserved

1.8.1 Design Considerations

The helix plates along the tieback shaft must be located beyond the active wedge or failure plane to provide proper anchorage. The last helix plate from the tip (plate closest to the wall) shall be at least five (5) times its diameter beyond the estimated failure plane (*Figure 1.47*). The effective tieback length, i.e., the axial embedment of the last helix plate from the tip, should also be a minimum distance of twelve (12) times its diameter from the wall face, following the general guidelines in AC358 for K_t verification for tension piles. Again, the design professional may determine effective tieback lengths more or less than this value based upon site-specific soil and project conditions. The helix plates should also be located at least five (5) diameters below the ground surface of the retained soils to model deep foundation behavior. Multiple tiebacks shall have a center-to-center spacing at the helices of at least three (3) times the diameter of the largest helix plate to avoid significant stress overlap within the bearing soils.

Helical tiebacks are often installed at a downward angle from horizontal, typically on the order of 5 to 15 degrees. This downward angle is often considered in order achieve the 5D depth criteria below the surface of the retained soils, to increase the vertical effective overburden stress at the helix depths (in granular soils), or to extend the helix plates to a deeper, more competent soil layer. A slight downward angle may also be considered to simply minimize the potential for groundwater to follow the shaft and seep through the wall penetration.

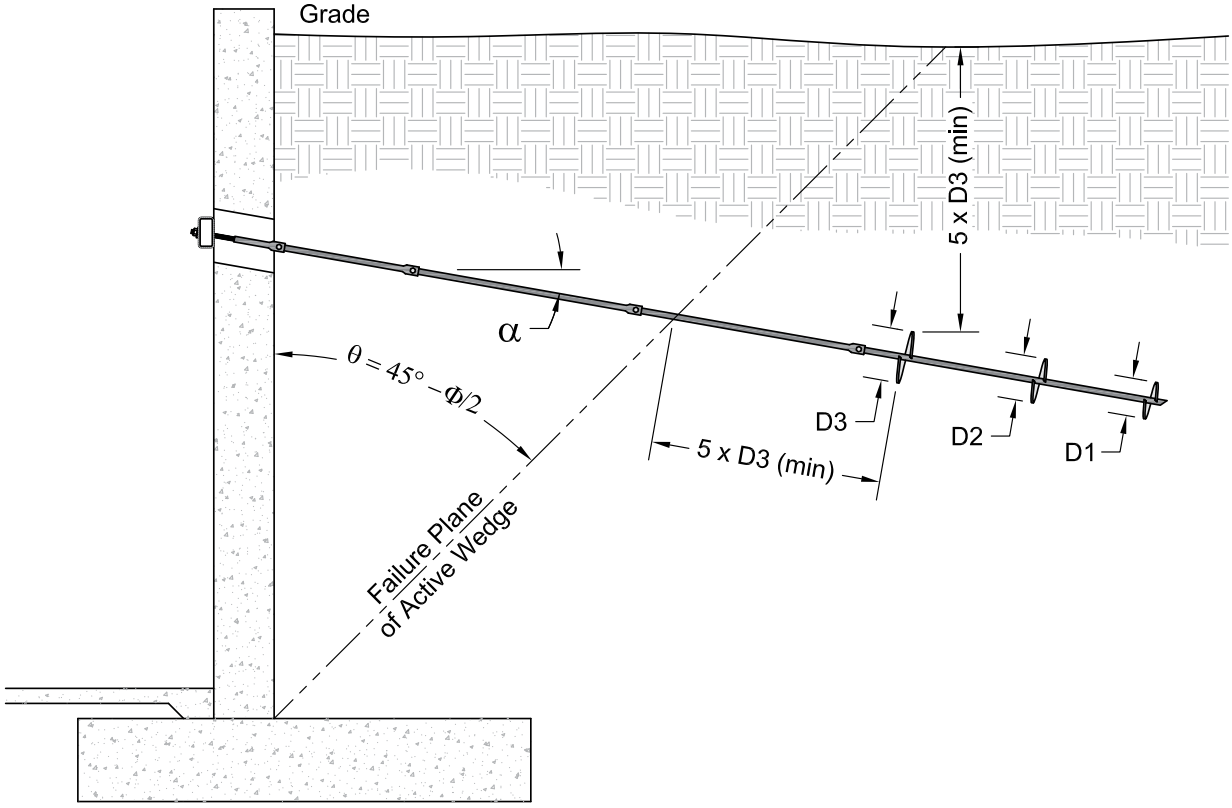

Figure 1.47 Helical tieback design considerations

© 2024 Supportworks®
All Rights Reserved

Tiebacks designed with a downward installation angle (α) should be installed to a torque-correlated capacity equal to or greater than the required axial tieback capacity (T_R) (*Figure 1.48*). The required axial tieback capacity increases with an increase in tieback installation angle, provided the calculated horizontal tieback capacity (T_{CH}) is held constant. The calculated horizontal tieback capacity (T_{CH}) is determined from analysis considering the various loads on the wall. ***Remember that the torque-correlated ultimate capacity should exceed the service load by an appropriate factor of safety.*** The equation for determining the required axial capacity of a downward battered tieback is:

$$T_R = T_{CH} / \cos(\alpha)$$

The vertical component of the tieback force should also be considered so as not to overstress the wall or the wall bearing soils. The vertical component of the tieback force (T_{CV}) will increase with an increase in installation angle, provided the calculated horizontal tieback capacity (T_{CH}) is held constant. The vertical force on the wall generated by the tieback may be calculated by:

$$T_{CV} = T_{CH} \tan(\alpha)$$

or

$$T_{CV} = T_R \sin(\alpha)$$

Where,

T_R	=	Installed capacity of tieback at angle α
α	=	Angle of tieback installation measured downward from horizontal
T_{CH}	=	Calculated horizontal tieback capacity determined from wall analysis
T_{CV}	=	Calculated vertical load on the wall due to tieback installation

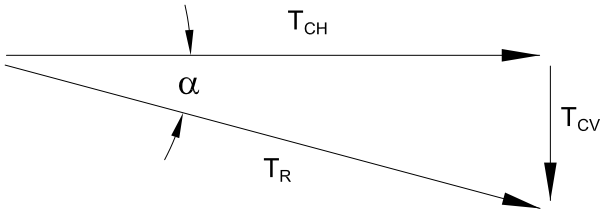

Figure 1.48 Vector mechanics of tieback forces

Angled or beveled washers are recommended at the tieback/bearing plate interface to more uniformly transfer the tension loads (refer back to *Figure 1.29*). Beveled washers are especially critical when the tiebacks are pretensioned with a torque wrench. Uniform bearing of the nut to the beveled washer to the bearing plate provides a more accurate reading of resistance and torque, which in turn is a more accurate determination of axial force on the tieback.

The design of the tieback system should consider the structural details of the wall, the wall reinforcing, present wall condition, and the effect of any penetrations necessary to install the tiebacks. Cantilevered concrete retaining walls, for example, are generally designed with significant reinforcing steel on the backfilled side of the wall where tension and bending are greatest. Reinforcing steel within the compression side of the wall is generally the minimum required by code. Tieback installation induces a negative bending in the cantilevered wall for which the wall was not originally designed. Walls to be stabilized with tiebacks, or walls that will be designed with tieback support, should be reviewed by a design professional.

The assumed failure plane behind an earth retaining wall is dependent upon soil conditions and wall type. As a general rule of thumb, a failure plane can be projected from the bottom back face of the wall or wall footing upward at an angle of 45-Φ/2 (degrees) from vertical for both active and at-rest conditions. For basement walls, this failure plane is usually assumed to begin at the bottom of the wall. For cantilevered retaining walls, it may be appropriate to model the failure plane beginning at the bottom of the wall or

© 2024 Supportworks®
All Rights Reserved

the bottom back edge of the footing heel. For sheet-pile walls, the failure plane is usually assumed to begin at or slightly below the mud line.

Failure modes for restrained walls should be evaluated for internal stability, external stability, bearing capacity and global stability. It is the responsibility of the design professional of record to perform these evaluations. Typical factors of safety for helical tiebacks used in conjunction with earth retention systems are generally on the order of 1.3 to 1.5 for temporary applications and 2.0 to 3.0 for permanent applications.

Foundation Supportworks engineers recommend that all helical anchors and tiebacks (excluding soil nails) be pretensioned or proof tested following installation (*Figure 1.49****). Pretensioning to 1.0 to 1.33 times the service load minimizes deflection of the tiebacks and structure as the tiebacks are put into service and the soil strength around the helix plates is mobilized. Tiebacks installed to support existing walls are typically locked off at 0.75 to 1.1 times the service load after proof testing. Helical anchors and tiebacks to be cast into new concrete retaining walls may be completely unloaded, locked off with a modest seating load, or locked off near service load after proof testing. The design professional should determine pretensioning and lock-off procedures based upon project conditions, anticipated tieback deflections and the estimated tolerable movement of the supported structure. Tiebacks can be pull tested or load tested to typically two (2) times the service load or more to identify the ultimate system capacity, better assess soil conditions and soil/anchor interaction, and validate design assumptions and parameters. Tiebacks that undergo load testing to greater than 1.5 times the service load, or failure, are generally considered sacrificial and should not be used as production tiebacks.***

Figure 1.49 Pretensioning helical tieback

© 2024 Supportworks®
All Rights Reserved

1.9 Helical Soil Nails

Soil nailing is a method of earth retention that relies on a grid of individual reinforcing members installed within a soil mass to create an internally stable gravity wall/retaining system. Soil nail wall technology began in Europe with use of the New Austrian Tunneling Method in rock formations in 1961. The technology then carried over to applications involving unconsolidated soil retention, primarily in France and Germany. Soil nail walls were first used in North America for temporary excavation support in the late 1960s and continued to gain recognition and acceptance during the 1970s and 1980s for higher profile projects including highway applications. Much of the soil nail wall research performed in North America was funded by the Federal Highway Administration (FHWA) and other state highway agencies during the 1990s. Although helical piles have been used as tiebacks since the early 1950s, helical soil nails are a relatively new alternative to their grouted counterparts.

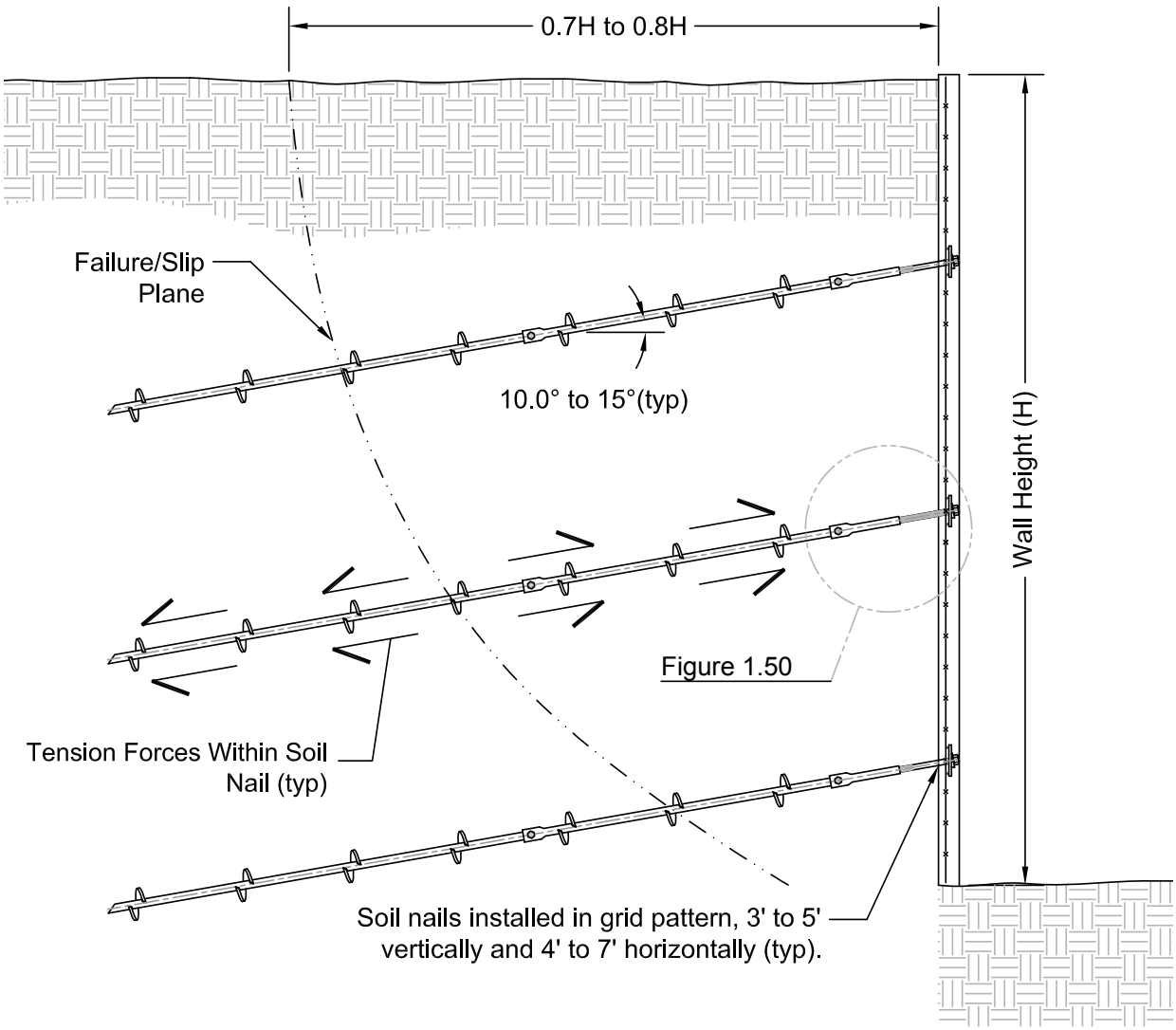

Figure 1.50 Helical soil nail wall installation

© 2024 Supportworks®
All Rights Reserved

Soil nail walls offer the following advantages over tieback walls as well as other top down construction techniques:

- Soil nail walls are more economical than conventional concrete gravity walls and are often more economical than tieback walls due to reduced wall facing requirements. There would likely be more soil nails than tiebacks for a given project, but this additional cost for the nails is outweighed by the difference in cost of a shotcrete facing versus a more substantial soldier pile, sheet-pile, or reinforced concrete wall detail.

- Soil nails are typically shorter than tiebacks for similar wall heights so there will be reduced right-of-way (ROW) requirements.

- There is less impact to adjacent structures since soil nail walls are not installed with vibratory energy like soldier piles or sheet piles.

- Overhead clearance requirements are less than driven soldier pile or sheet-pile wall construction. Soil nail walls can therefore be installed easily below bridges and even within existing buildings.

- There is no need to embed structural elements below the proposed ground surface elevation on the low side of the soil nail wall. Soldier pile and sheet-pile walls require minimum embedment depths for wall stability.

- Soil nail wall construction is typically quicker than other earth retention methods.

- Soil nail walls can be constructed in remote areas with smaller equipment.

- Soil nail walls have performed well during seismic loading events due to the overall system flexibility.

A helical soil nail typically consists of square shaft lead and extension sections with small diameter (6 to 8 inches) helix plates spaced evenly along the entire shaft length (*Figure 1.50* and *Figure 1.51*). The helical soil nail is installed by application of torque, similar to the installation of a helical tieback. The helical soil nail is a passive bearing element, which relies on movement of the soil mass and active earth pressures to mobilize the soil shear strength along the nail. In contrast, a tieback is pretensioned to mobilize the soil shear strength around the helix plates. Excavation, soil nail installation and application of wall facing is completed in steps from the top of the wall downward.

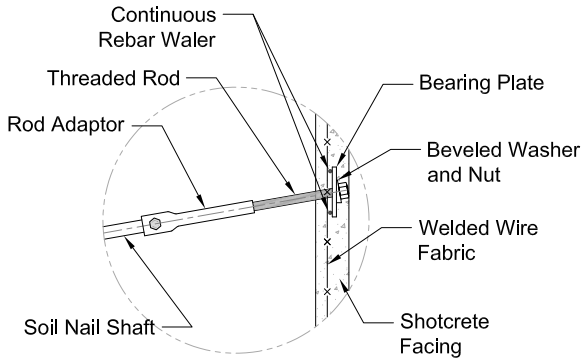

Figure 1.51 Nail head to wall detail

© 2024 Supportworks®
All Rights Reserved

1.9.1 Construction Methodology

Soil nail walls are constructed from the top down where the excavation proceeds as shown in *Figure 1.52*. The construction sequence for a typical helical soil nail wall includes:

- Initial excavation about 3 to 5 feet deep depending upon design parameters and soil conditions
- Installation of the first row of helical soil nails to the required inclination angle, torque and embedment length
- Placement of drainage medium (if required)
- Placement of wall reinforcement and bearing plates
- Placement of shotcrete to the required design wall thickness
- After shotcrete has cured, repeat sequence for successive rows of soil nails. Continue process to the final design depth (wall height).

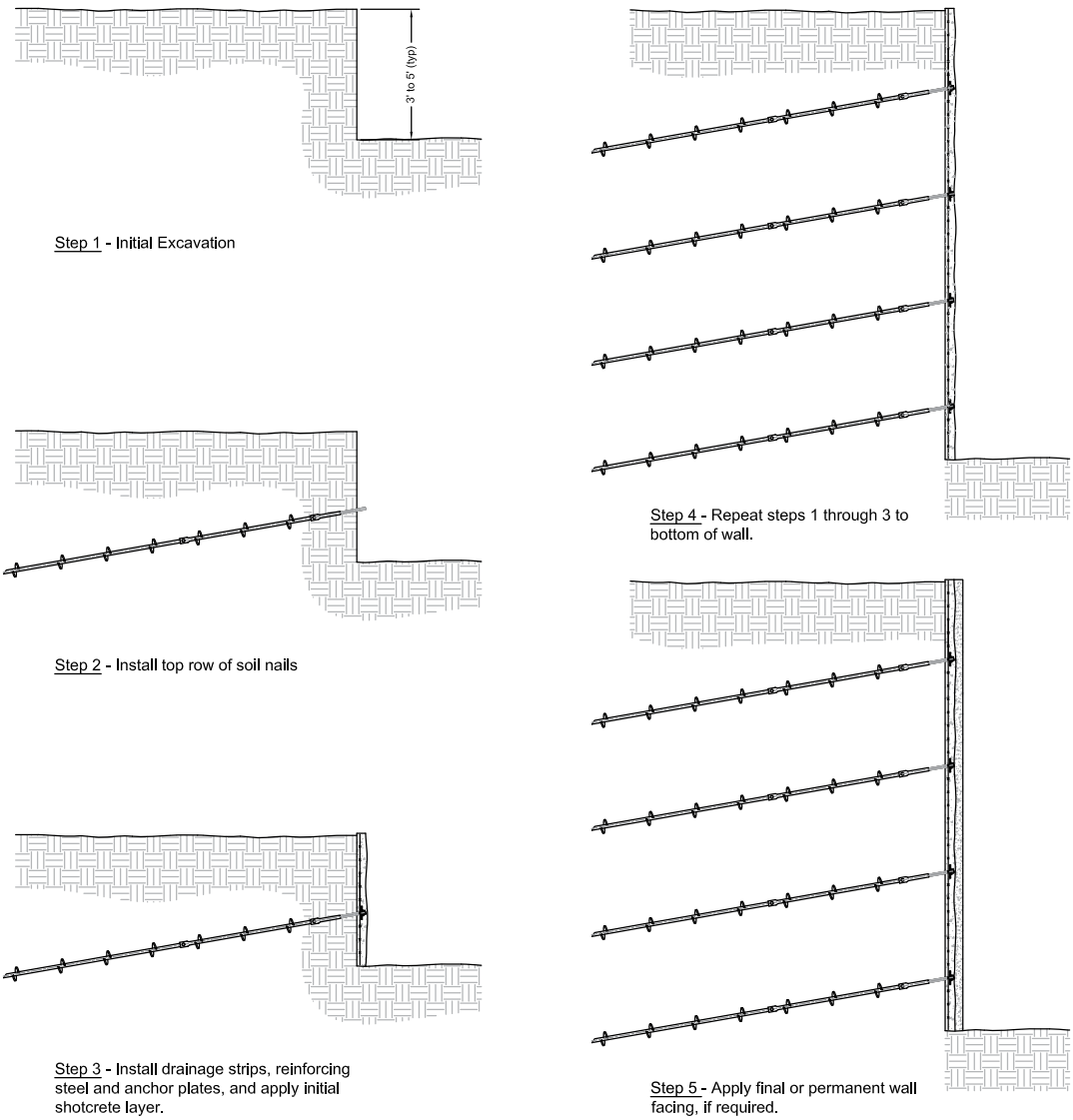

Figure 1.52 Typical soil nail wall installation sequence

© 2024 Supportworks®
All Rights Reserved

1.9.2 Design Considerations

Helical soil nails are passive bearing elements which rely on movement of the soil mass to mobilize the soil shear strength along the nail. As a result, soil nail walls typically experience more lateral movement than tieback walls of similar height. By allowing this movement, the highest stress in the soil nail is near the failure plane, centered between the opposing tensile forces. Conversely, the highest stress in a tieback is at the wall face. Therefore, soil nails have less nail head force than tiebacks for a similar size wall, which results in potential cost savings by using soil nails due to reduced wall thickness requirements.

The following should be considered when designing soil nail walls.

- Not all soil conditions are suitable for construction of helical soil nail walls. Excavations are generally made in 3 to 5-foot steps, depending upon soil type and strength. The soil should be able to stand unsupported for a period of at least one day after the vertical cut is made. Soil conditions that may not be favorable for helical soil nail wall construction include:
    - Dry, poorly-graded cohesionless soils, e.g., clean sands or sands with SPT N-values less than 5 blows/foot
    - Highly plastic clays, expansive soils, organic soils, or soils with a liquidity index of 0.2 or greater
    - Clays with SPT N-values less than 4 blows/foot
    - Soil profiles with high groundwater levels - dewatering may be required to facilitate installation
    - Soil with cobbles, boulders or weathered rock lenses
    - Highly corrosive soils
    - Collapsible soils
    - Very dense sands and hard clays - may be difficult to penetrate without predrilling a pilot hole
- A failure plane generally develops at the top of the wall at a horizontal distance of about 0.7 to 0.8 times the height of the wall away from the wall face (Lazarte, Elias et al. 2003). This distance may be reduced by battering the wall face. Any structure, utility, roadway, etc. that would be impacted by the wall movement and/or failure plane should be considered during the design phase.
- Top of wall lateral movements on the order of 0.2% to 0.3% of the wall height should be expected with soil nail lengths to wall height ratios between 0.7 to 1.0, negligible surcharge loading and a design including a global factor of safety of at least 1.5. As a general guide, the soil mass located between the failure plane and the wall facing may slump approximately ⅛-inch laterally and ⅛-inch vertically for each 5-foot depth of excavation.
- Soil nail walls may be designed with a slight batter to account for anticipated lateral wall movement.

© 2024 Supportworks®
All Rights Reserved

- There may be restrictions to the design soil nail lengths, including property lines, ROW, underground utility corridors, bridge abutments or existing structures.

- Consider temporary and/or permanent surcharge loads from adjacent structures, roadways, construction equipment, fill placement, etc.

- Maximum wall heights for helical soil nail walls are practically limited to 20 to 30 feet. Increased heights may be considered with a stepped wall design.

- Helical soil nails are typically installed in a grid pattern, spaced 3 to 5 feet vertically and 4 to 7 feet horizontally.

- Helical soil nails are typically installed at an angle of 10 to 15 degrees downward from horizontal, although a batter is not required. The downward installation angle is a carryover from grouted nail design where an angle is required to limit wet grout from flowing out the hole.

- Soil nails may be installed with consistent lengths for all rows, or be longer at the top of the wall, becoming shorter with successive rows toward the bottom. Nail length determination depends upon soil strength parameters, location of the failure plane, and design for critical limit states as discussed in *Section 1.9.2.2*.

The design procedure for helical soil nails is similar to that for grouted nails. For a helical soil nail, the bond stress with the soil is assumed to act along a cylindrical surface area defined by the outside edge of the helix plates. Bearing capacity of the soil nail is determined using the Individual Bearing Method described in *Section 1.7* and is correlated to bond stress by:

$$q_u = Q_u / L\pi D_h FOS$$

Where,

q_u = Ultimate Bond Stress (psi)
Q_u = Ultimate Capacity of the Helical Soil Nail by Individual Bearing Method (lb)
L = Soil Nail Length (in)
D_h = Helix Diameter (in)
FOS = Factor of Safety for Uncertainties in Soil Conditions (Typically 1.5 to 2.0 Based on Quality of Soil Information)

© 2024 Supportworks®
All Rights Reserved

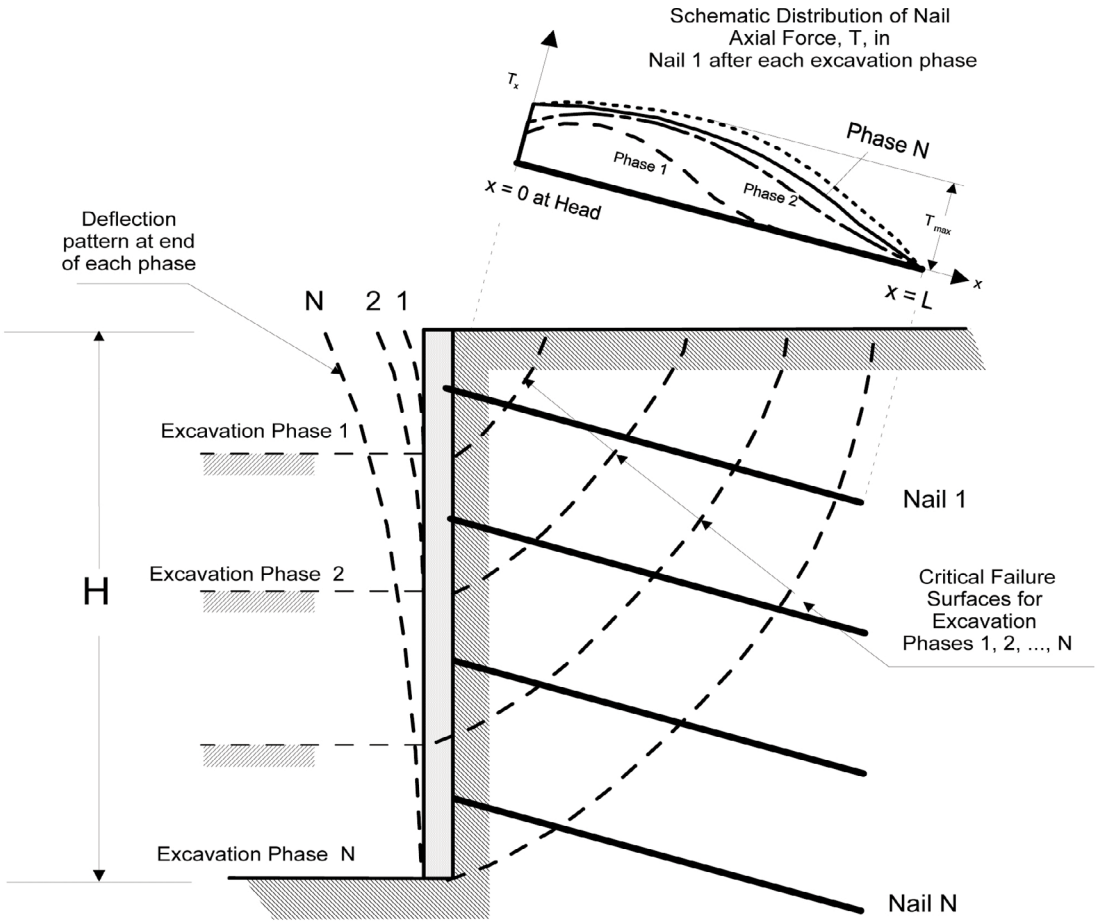

Figure 1.53 Potential failure surfaces and soil nail tensile forces (Lazarte, Elias et al. 2003)

As the construction of the wall progresses, the upper soil nails become less important for the stabilization of the soil mass, and depending upon wall height, may not contribute to the global stability at the final excavation phase. However, the upper soil nails are instrumental in providing stability during the early phases of excavation and contribute to limiting wall deflections. *Figure 1.53* shows the distribution of tensile force in Nail 1, cumulative wall movement and the critical failure surfaces as the soil nail wall construction progresses. The upper schematic of *Figure 1.53* illustrates the tensile force distribution along the top soil nail as construction continues through the various excavation phases. The tensile force in Nail 1 is shown to decrease once Phase N is completed due to load redistribution among the lower rows of soil nails as the excavation progresses between Phase 2 and Phase N.

The design of helical soil nail walls should be performed in general accordance with requirements detailed in FHWA Geotechnical Engineering Circular No. 7 (Lazarte, Elias et al. 2003). Several computer programs are available for design of soil nail walls, with the more common programs being SNAIL (CALTRANS 1999), GoldNail (Golder 1996) and SNAP-2 (FHWA, 2014).

SNAIL is a Windows-based program developed by the California Department of Transportation (CALTRANS) and is available free to the public. SNAIL is a two dimensional limit equilibrium program that uses force equilibrium exclusively. Either metric or English units can be used during the design process. Soil nail reinforcement inputs include location, diameter, inclination angle, vertical and horizontal spacing, cross-sectional area and yield strength. The soil parameter inputs include soil unit weight, cohesion, friction

© 2024 Supportworks®
All Rights Reserved

angle, bond strength and the bond strength reduction factor. The soil strength parameters are modeled with the conventional linear Mohr-Coulomb envelope. The only data entered for the wall design is the face punching shear, therefore an initial wall facing design must be used for the trial runs. The program allows for consideration of up to seven soil layers and provides inputs for two uniform vertical surcharge loads and an internal or external point load. The program output provides the factor of safety at user-selected depths below the toe of the wall along with a graphical display of the failure plane and the lowest factor of safety from the ten most critical failure surfaces analyzed at the toe of the wall elevation.

GoldNail is a Windows-based proprietary program developed by Golder Associates which satisfies both moment and force equilibrium. The program can work in one of three modes; design, factor of safety and nail service load. The program allows factored strengths for Load and Resistance Factor Design (LRFD). The soil strength parameters can be modeled with the conventional linear Mohr-Coulomb envelope or using a bi-linear strength envelope. Up to 13 soil layers can be modeled with more complex geometry capability than SNAIL. The program can only model a circular failure surface which must pass at the toe of the wall or above the toe. This limits the ability to evaluate sliding and bearing capacity failure modes. Data input variables and output reports are generally similar to SNAIL.

SNAP-2 (Soil Nail Analysis Program) is a Windows-based program developed by the Federal Highway Administration (FHWA) and is available free to the public. SNAP-2 is a two dimensional limit equilibrium program using ASD (allowable stress design). The program can evaluate the internal components (wall facing and nails), external stability and global stability in general accordance with FHWA Geotechnical Engineering Circular No. 7. The internal, external and global stability analyses use a circular slip surface. The program requires the user to input geometrical and material properties for the soil and nails along with wall facing design parameters that include dimensions and strength values of the reinforcement, shotcrete and facing connections. SNAP-2 allows for complicated slopes, multiple soil nail walls, multiple soil layers and multiple temporary and permanent facing designs.

FHWA Geotechnical Engineering Circular No. 7 (Lazarte, Elias et al. 2003) provides design tables and charts that can be used for preliminary estimation of the wall design. The tables and charts were developed using SNAIL simulations and include the following assumptions:

- The soil is homogenous (only one soil type and strength parameter)
- There are no surcharge loads or sloped backfill conditions
- There are no seismic forces/loads
- The soil nails are of uniform length, spacing and inclination for each row
- There is no groundwater present

There should always be a final design prior to construction activities which take into consideration any deviations from the assumptions listed above and determination of the Limit States described in *Section 1.9.2.2*.

The design of helical soil nails should be completed by experienced design professionals. Installation of Foundation Supportworks helical soil nails shall be by certified Foundation Supportworks installing contractors trained specifically for helical soil nail installations. Foundation Supportworks engineers recommend that the wall design follow the general guidelines detailed in the FHWA Geotechnical Engineering Circular No. 7 (Lazarte, Elias et al. 2003).

Preliminary design recommendations are available to Foundation Supportworks installing contractors to assist with costing of helical soil nail wall projects. However, the final design must be completed and/or approved by the engineer of record.

© 2024 Supportworks®
All Rights Reserved

1.9.2.1 Temporary & Permanent Wall Facing

Helical soil nail walls may be classified as temporary or permanent, and the design of the wall facing and nail head connection details will vary based upon this determination. **Whether the soil nail wall is temporary or permanent, the wall facing and helical soil nail connection detail must be completed and/or approved by the engineer of record.**

Helical soil nail walls are used most often in temporary shoring applications, with reinforced shotcrete the most common temporary wall facing material. Shotcrete is concrete conveyed through a hose and projected through a nozzle at high velocity onto a working surface. The shotcrete is applied/sprayed in thin lifts until the design thickness requirement is met for the wall. For temporary wall applications, the shotcrete is typically applied to a thickness of 3 to 4 inches. Internal reinforcement of the shotcrete may consist of welded wire fabric (WWF), steel reinforcing bars (rebar), or fiber reinforcement. WWF with rebar walers at the nail heads is typically favored due to ease of installation.

Permanent helical soil nail walls may either have an additional thickness of shotcrete applied or another facing attached to the temporary shotcrete layer. For permanent soil nail walls with shotcrete facing, the typical wall thickness varies from 6 to 12 inches, not including the thickness of the temporary facing. Cast-in-place and precast concrete facings can also be used in conjunction with the temporary shotcrete wall facing. Facings can be attached to the shotcrete wall to form decorative facades.

1.9.2.2 Limit States

The design of the helical soil nail wall must consider two distinct limiting conditions; Strength Limit States and Service Limit States. The Strength Limit States refer to failure of the system due to loading forces greater than the strength of the system or its individual components. Specifically, the following potential failure modes must be evaluated:

- External failure modes
- Internal failure modes
- Facing failure modes

External failure modes include global stability, sliding and bearing failure. Internal failure modes include soil nail pullout failure, soil nail tensile failure and soil nail shear failure along the failure plane. Facing failure modes include flexure failure, punching shear failure and head stud failure.

The service limit states do not include failure of the structure, but rather consider serviceability issues such as wall deformation, wall settlements or cracking of the facing.

For further information related to designing for these potential failure modes, please refer to FHWA Geotechnical Engineering Circular No. 7 (Lazarte, Elias et al. 2003).

© 2024 Supportworks®
All Rights Reserved

1.10 Helicast® Grouted Helical Pile System

The Helicast® Grouted Helical Pile System generates compression capacity as a combination of helix plate end bearing and frictional resistance of the grout column and/or outer casing. Helicast piles consist of a central steel shaft with helix plates near the tip, soil displacement plates, casing (optional), and grout. The central steel shaft consists of solid square shaft lead and extension sections (*Figure 1.54*).

Helicast piles are installed into the ground similar to traditional helical piles by application of torque and axial compressive force ("crowd"). A grout reservoir is constructed at the surface either before or after installation of the lead section. A lead soil displacement plate is generally located at the first coupler between the lead and first extension, and extension displacement plates are located at each coupler between successive pile extension sections. As the pile is advanced, the lead displacement plate pushes soil outward and away from the central shaft and allows specialty micropile grout to flow by gravity from the reservoir into the created void. Extension displacement plates help to maintain the size and shape of the grout column as the pile is advanced. Helicast piles may have temporary or permanent steel or PVC outer casings and a load transfer device that allows attachment to structures.

Although, the compression capacity of a Helicast pile is a combination of end bearing and frictional resistance, the tension capacity is based solely on the uplift end-bearing capacity of the helix plates along the central steel shaft lead section and the tension capacity of the central steel shaft and couplings.

Figure 1.54 Helicast Pile System with central steel shaft and grout column

© 2024 Supportworks®
All Rights Reserved

1.10.1 Helicast Components

The components of the Helicast pile system include the central steel shaft with helix plate(s), lead and extension soil displacement plates and a grout column. Some applications may require temporary or permanent outer casing material typically consisting of poly-vinyl chloride (PVC) or steel pipe.

1.10.1.1 Central Steel Shaft

The central steel shaft consists of a solid square shaft lead section with one or more helix plates and solid square shaft extension sections without helix plates. Lead sections are typically fabricated in 5, 7 and 10-foot lengths and extension section lengths are either 5 or 7-foot lengths. Five-foot extension section lengths are most commonly used, however, 7-foot lengths may be acceptable in soil profiles where the grout column has less potential to collapse or neck down, such as stiff clays above the groundwater table. The Foundation Supportworks HA150 and HA175 Helical Anchor Systems are acceptable products for Helicast central steel shafts. For additional information regarding the central steel shaft, see *Section 1.3.2*.

1.10.1.2 Lead Soil Displacement Plates

The lead soil displacement plate is a round steel plate with soil cutting blades or paddles and central square openings sized for the HA150 or HA175 shafts. The lead displacement plates are generally located at the connection of the lead section and the first extension section (*Figure 1.54* and *Figure 1.55*). The lead displacement plate creates the annular space for grout placement. HA150 lead displacement plates have circular steel plate diameters of 5, 6 or 7 inches and HA175 lead displacement plates have circular steel plate diameters of 5, 6, 7 or 9 inches.

Cased lead displacement plates are used to attach steel or PVC outer casings (*Figure 1.55*). The cased lead displacement plates are basically a lead displacement plate with a factory-welded steel collar on one side to facilitate attachment of the casing.

Figure 1.55 Lead displacement plates (cased on left, plain on right)

© 2024 Supportworks®
All Rights Reserved

1.10.1.3 Extension Soil Displacement Plates

Extension soil displacement plates are round steel plates with two grout holes and central square openings sized for the HA150 or HA175 shafts (*Figure 1.56*). The extension displacement plates are generally used at each extension coupling to maintain the grout column annular space during continued advancement of the central steel shaft (refer back to *Figure 1.54*). The HA150 extension displacement plates have circular steel plate diameters of 5, 6 or 7 inches and the HA175 extension displacement plates have circular steel plate diameters of 5, 6, 7 or 9 inches. Extension displacement plates may also occasionally include soil cutting blades or paddles to assist in maintaining consistent grout column dimensions.

Cased extension displacement plates are used to attach steel or PVC outer casings (*Figure 1.56*). The cased extension displacement plates are basically an extension displacement plate with a factory-welded steel collar on each side to facilitate attachment of the casing.

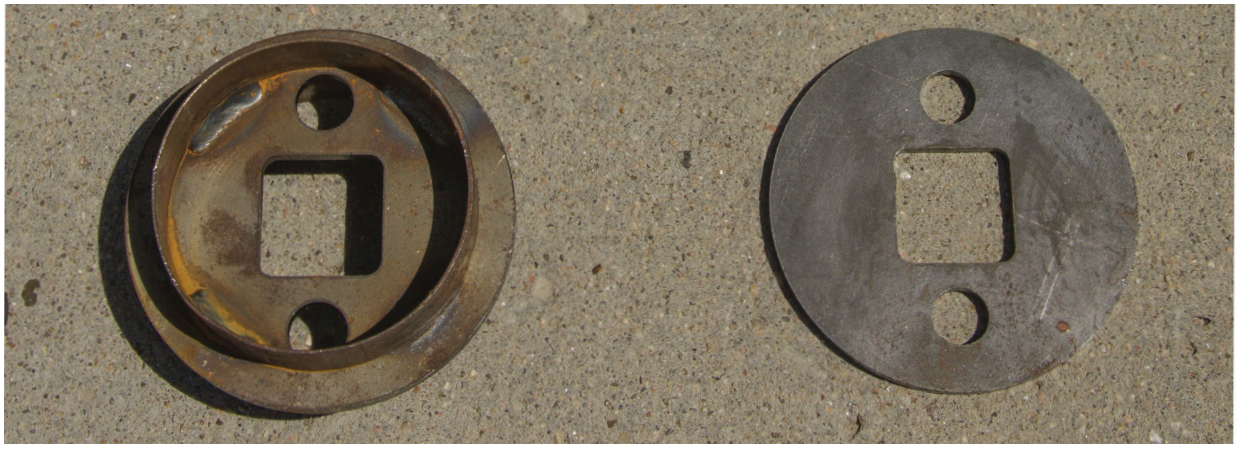

Figure 1.56 Extension displacement plates (cased on left, plain on right)

1.10.1.4 Outer Casing

Steel and/or PVC outer casing provides the following benefits:

- Steel outer casing provides additional lateral pile capacity.
- PVC casing provides a bond breaker between the grout and the soil.
- Steel or PVC casing ensures grout containment where high groundwater conditions are present, within very loose/very soft soil conditions or within soil strata with known voids or fissures.
- Steel or PVC casing can protect the grout mixture from chemical attack in sulfate-rich soils or other aggressive soils.
- A short section of PVC casing, used at the bottom of the grout column, helps maintain the grout column diameter in soils prone to necking (*Figure 1.57*).

Figure 1.57 PVC casing between lead and first extension displacement plates

© 2024 Supportworks®
All Rights Reserved

The grout mixture for Helicast piles should be a non-shrink, free-flowing cementitious slurry with a viscosity to maintain the grout column diameter during installation, and a design strength to meet the specified compressive strength requirements for the project. The grout shall also adequately adhere to the central steel shaft, displacement plates and steel casing. A suitable grout mixture should be determined based on the soil type and chemistry, the groundwater table elevation, required grout column strength and the grout column diameter. The components of the grout mixture may include the following:

- Cement for Helicast piles shall be Portland cement conforming to ASTM C150 Type I or Type II.
- Chemical and/or mineral admixtures to meet strength, workability, setting time or other performance specifications.
- Fine aggregate (for grout column diameters greater than 6 inches) should consist of natural sand, manufactured sand or a combination thereof.
- Mixing water shall be potable with no pronounced taste or odor. The water should be maintained at a suitable temperature for the mixing process.

Chemical admixtures may include water reducers, water-reducing retarders and accelerators. Mineral admixtures may include fly ash, silica fume or natural pozzolans.

The required wet density of the specified grout mixture should be determined prior to pile installation and periodically checked in the field with a mud balance during installation. The mud balance test determines the specific gravity of the grout mixture which is then used to verify the water-to-cement (and admixtures) ratio (*Figure 1.58*).

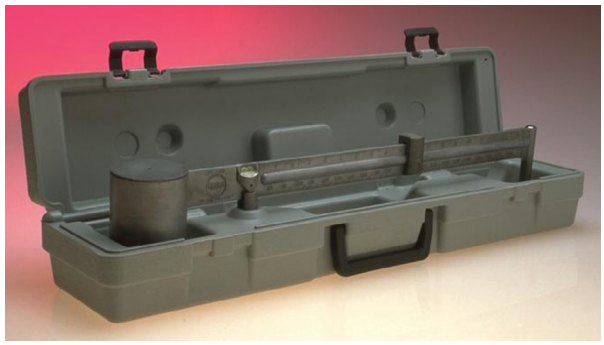

Figure 1.58 Mud balance for specific gravity testing of the grout mixture

For most applications, Foundation Supportworks engineers recommend a grout mixture capable of achieving a grout strength of at least 3,500 psi at seven days and 6,000 psi at 28 days, as determined by laboratory testing in accordance with ASTM C109 and ASTM C942. A specialty grout mix would be recommended for most sites where Helicast piles are being considered, i.e., subsurface profiles with very weak to fluid soils and/or a high groundwater table. Grout may either be delivered to the project site from a ready mix plant or mixed on site. Specialty micropile grout is most often mixed on site.

Grout strength, pot life and set time may be affected by elevated grout mix temperatures. Research has shown that concrete mixed, placed and cured at elevated temperatures (generally above 77°F), will exhibit higher early strength and generally lower 28-day compressive strength than concrete mixed and cured at lower temperatures. The mix water and grout mixture temperature should be monitored periodically during the mix process to determine if the mix water needs to be cooled to bring the grout mixture to a more suitable temperature.

The grout pot life is the amount of time that the grout is in a flowable condition and is dependent upon the grout temperature and admixtures such as plasticizers and retarders. Pot life begins to decrease when mixing temperatures exceed about 70°F. Without admixtures

© 2024 Supportworks®
All Rights Reserved

to increase the thixotropic properties of the grout, the pot life reduces by about half for every 18°F increase in mix temperature from an initial temperature of 70°F. For example, if the grout pot life is 2 hours at 70°F, the pot life would be decreased to about 45 minutes if the mix temperature is 97°F.

The grout pot life should be about two times greater than the time it takes to install the Helicast pile. During extreme heat conditions, adding ice to the mix water will help reduce the grout mixture temperature and increase the pot life. The temperature of the central steel shaft, casings and other Helicast components will also have an effect on the pot life of the grout mixture. If the grout mixture is exposed to very hot steel components, flash hydration may occur where the grout in contact with the hot steel hydrates too quickly to achieve sufficient bond between the steel and grout. Keeping the steel components of the Helicast system away from direct sunlight or preferably, kept in a cool environment during hot weather installations, will increase the pot life of the grout mixture. If there is no option to keep the Helicast system components cool during extreme heat events, spraying the steel components with water prior to installation may cool the material and reduce the potential for flash hydration to occur.

The grout strength may also be affected when mixed and placed during cold weather. Cold weather is defined by the American Concrete Institute (ACI) Committee 306 as "when the air temperature has fallen to, or is expected to fall below 40°F during the protection period." When ambient temperatures meet the requirements for cold weather per the ACI, means and methods should be used to keep the grout mixture at an acceptable temperature during mixing, placement and curing operations. This may include the use of enclosures, wind breaks, portable heaters and blankets. During cold-weather grouting, any grout placed above ground or below ground in the frost zone should be protected with warming blankets at the pile head and/or pile cap. The steel shaft and steel components must be kept free of ice and snow prior to use.

© 2024 Supportworks®
All Rights Reserved

1.10.2 Benefits

The potential benefits of a Helicast pile system include:

- Helicast piles typically require smaller installation equipment than similar capacity, large diameter helical piles.
- The pile system is suitable for limited access areas.
- The installation is vibration free and does not generate spoils.
- The grout column surrounds the central steel shaft to create a pile that is more resistant to buckling.
- The grout column offers additional corrosion protection in soil profiles that are corrosive to steel.
- A grouted helical pile may develop capacity in marginal soil conditions where a standard end-bearing helical pile may not. There is additional "frictional" capacity at the grout/soil interface.
- Frictional piles typically deflect less than end-bearing piles for a given load.
- Where favorable soil conditions exist, a Helicast pile can achieve allowable capacities exceeding 100 kips.
- Helicast piles may provide an economical alternative to large diameter helical shaft sizes or other, more costly deep foundation options.

1.10.3 Limitations

Limitations of the Helicast system include:

- Casing may be required in soils prone to grout loss, necking soils or sites with high groundwater tables.
- Sufficient grout strength must be achieved prior to loading the pile.
- Grout mixing and placing operations are more difficult in extreme cold or hot weather.
- Proper helical pile installation procedures, including rate of advancement and alignment (among others), are more critical for maintaining a grout column.
- The potential for hole scour and grout contamination, hole collapse, necking of the grout column, poor grout flow, and creation of voids increases with pile batter or inclination angle. Foundation Supportworks engineers generally recommend maximum inclination angles of 10 to 15 degrees from vertical.
- The grout column frictional resistance should not be included in the determination of tension capacity.

1.10.4 Design Considerations

The total compression capacity of a Helicast pile is a combination of frictional resistance of the grout and/or casing with the soil (Q_f) and the end-bearing resistance of the helix plates with the soil (Q_p). The tension capacity of a Helicast pile is based solely on the end-bearing resistance with no contribution from the frictional resistance of

© 2024 Supportworks®
All Rights Reserved

the shaft mainly due to variability in bond values between the central steel shaft and the grout column. The total compression and tension capacities of a Helicast pile are expressed as:

$$Q_{u,compression} = Q_f + Q_{p,compression}$$

$$Q_{u,tension} = Q_{p,tension}$$

Research has shown that full mobilization of driven pile and drilled shaft frictional resistance occurs with pile head movements as small as 0.5 percent of the shaft diameter. Similarly, the load transfer mechanism of Helicast compression piles typically involves full mobilization of the frictional resistance component well before full mobilization of the end-bearing component. The design professional must evaluate the structural and geotechnical capacity at the service and ultimate loading conditions for both the end-bearing and frictional resistance components of the Helicast system.

Like other deep foundation alternatives, there are many factors to be considered in designing a helical pile foundation. Foundation Supportworks engineers recommend that helical pile design be completed by an experienced geotechnical engineer or other qualified design professional.

1.10.4.1 Frictional Resistance

The frictional resistance of the Helicast pile system is a function of the soil type, soil strength, effective stress along the outer-shaft surface and the outer-shaft surface finish. Typical outer-shaft surface finishes are grout, steel casing or PVC casing. Steel casing will typically have less unit frictional resistance than grout for the same soil profile. PVC casing is generally considered a bond breaker between the grout and surrounding soils and should not be assigned a frictional resistance. The nominal (ultimate) frictional resistance (Q_f) of the pile is the product of the unit frictional resistance (f_s) and the surface area of the pile (S):

$$Q_f = f_s \cdot S$$

The frictional resistance methods incorporated into the Helicast module of the HelixPro design software include:

- NAVFAC DM7.2
- Alpha-Das
- Gouvenot
- User Input Bond Values

When evaluating the frictional resistance, the designer should evaluate more than one method to see the range in values between the methods. A conservative approach would be to use the lowest frictional resistance value from the available friction methods unless project-specific unit frictional resistance values are provided. A brief description of the four frictional resistance methods used in HelixPro follows.

© 2024 Supportworks®
All Rights Reserved

NAVFAC DM7.2 Method

The NAVFAC DM7.2 Method is taken from the 1986 version of "DM-7.02 Foundations and Earth Structures" published by the Naval Facilities Engineering Command (NAVFAC). The methodology is appropriate for both granular and cohesive soils.

For granular soils, the sum of the nominal frictional resistance (Q_f) from depth H_1 to H_2 is determined by:

$$Q_f = \sum_{H1}^{H2} K_h \cdot q' \cdot \text{Tan}\delta \cdot S$$

and the unit frictional resistance (f_s) from depths H_1 to H_2 would be:

$$f_{s,H1-H2} = Q_{f,H1-H2} / S$$

Where the properties from H_1 to H_2 are:

$\sum_{H1}^{H2}$ = Summation of Frictional Resistance from Depths H_1 to H_2

K_h = Horizontal Earth Pressure Coefficient

q' = Average Effective Vertical Stress (lb/ft^2)

δ = Interface Friction Angle between Pile and Soil

S = Surface Area of the Pile from H_1 to H_2 (ft^2)

The surface area of the pile from H_1 to H_2 is:

$$S = \pi \cdot D_s \cdot (H_2 - H_1)$$

Where:

D_s = Outer Shaft Diameter (ft)

The interface friction angle recommended in NAVFAC DM7.2 is:

- 20° for steel
- 0.75Φ for grout (where Φ is the soil friction angle).

HelixPro uses bearing capacity factors (N_q) modified from those recommended in NAVFAC DM7.2 (refer back to *Figure 1.39*) and a horizontal earth pressure coefficient of 1.0 for compression loading in granular soil. If alternative interface friction angles or earth pressure coefficients are necessary, the user should use the Input Bond Values method.

For cohesive soils, the nominal frictional resistance is determined by:

$$Q_f = \sum_{H1}^{H2} C_a \cdot S$$

Where:

C_a = Soil Adhesion from *Figure 1.59*.

© 2024 Supportworks®
All Rights Reserved

Pile Surface Finish	Soil Consistency	Soil Cohesion (lb/ft²)	Soil Adhesion (lb/ft²)
Concrete	Very Soft	0 - 250	0 - 250
	Soft	250 - 500	250 - 480
	Medium Stiff	500 – 1,000	480 - 750
	Stiff	1,000 - 2,000	750 - 950
	Very Stiff	2,000 - 4,000	950 - 1,300
Steel	Very Soft	0 - 250	0 - 250
	Soft	250 - 500	250 - 460
	Medium Stiff	500 – 1,000	460 - 700
	Stiff	1,000 - 2,000	700 - 720
	Very Stiff	2,000 - 4,000	720 - 750

Figure 1.59 Soil Adhesion from NAVFAC DM7.2

Alpha-Das Method

The Alpha-Das Method is described in the 4th Edition of "Principles of Foundation Engineering" written by Braja M. Das (1999).

The method used to evaluate the frictional resistance of granular soils is similar to the NAVFAC DM7.2 method with the following exceptions:

- The earth pressure coefficient (K_h) value is determined by:

$$K_h = 1.4(1-\sin\Phi)$$

- The interface friction angles are 0.6 and 0.8 times the soil friction angle for surface finishes of steel and grout, respectfully.

For cohesive soils, the nominal frictional resistance is determined by:

$$Q_f = \sum_{H_1}^{H_2} \alpha \cdot c_u \cdot S$$

and

$$\alpha = 180(c_u^{-0.78})$$

Where:

α = Empirical Adhesion Factor

c_u = Undrained Cohesion of the Soil from H_1 to H_2 (lb/ft²)

Using this method for cohesive soils, there is no reduction in unit frictional resistance for steel versus grout surface finishes.

© 2024 Supportworks®
All Rights Reserved

Gouvenot Method:

The Gouvenot Method is based on grouted anchor and micropile field load testing performed by D. Gouvenot and published in 1973. The results of the testing give unit frictional resistance for three different soil types classified as; Type 1 (Sands and Gravels), Type 2 (Mixed Soils) and Type 3 (Clays). The unit frictional resistance equations used in HelixPro are slightly modified from the original Gouvenot methodology for gravity fed micropiles as follows:

- Type 1 soils may have friction angles (Φ) greater than or equal to 30 degrees and less than 45 degrees (rather than greater than or equal to 35 degrees and less than 45 degrees in the original methodology).

- Type 2 soils may have friction angles greater than 0 degrees and less than 30 degrees (rather than greater than 20 degrees and less than 30 degrees in the original methodology).

- Type 2 soils may have cohesion values greater than 0 and less than or equal to 1,024 psf (rather than greater than 205 psf and less than or equal to 1,024 psf in the original methodology).

The unit frictional resistance (f_s) equations incorporated into HelixPro for the Gouvenot method are:

Type 1 Soils: Granular soils with friction angles of $30° \leq \Phi < 45°$:

$$\mathbf{f_s = q' \cdot \tan\Phi}$$

Type 2 Soils: Mixed soils with friction angles of $0° < \Phi < 30°$ and cohesion of $0\ lb/ft^2 < c \leq 1{,}024\ lb/ft^2$:

$$\mathbf{f_s = q' \cdot \sin\Phi + c \cdot \cos\Phi}$$

Type 3 Soils: Clay soils with cohesion of $1{,}024\ lb/ft^2 < c \leq 2{,}048\ lb/ft^2$:

$$\mathbf{f_s = c}$$

Type 3 Soils: Clay soils with cohesion greater than $2{,}048\ lb/ft^2$:

$$\mathbf{f_s = 2{,}048\ lb/ft^2}$$

Some items to note regarding the Gouvenot Method are:

- This method typically gives higher frictional resistance values in sand profiles than the NAVFAC DM7.2 and Alpha-Das Methods and may be unconservative.

- The Gouvenot Method is not evaluated for steel casing, therefore this method is not available in HelixPro when the User has grout column sections with outer steel casing surface finishes.

© 2024 Supportworks®
All Rights Reserved

User Inputs Bond Values Method

The User Inputs Bond Values method allows the User to input specific unit frictional resistance values for each pile section and soil strata. The determination of appropriate bond values should be based on an industry standard analytical method, or bond values may be taken from published literature for similar pile types, soil conditions and surface coatings. Publications such as FHWA-SA-97-070 "Micropile Design and Construction Guidelines" (June 2000) offer bond values for Type A (gravity grouted) Micropiles which may be suitable for preliminary design purposes.

1.10.4.2 End-Bearing Resistance

The evaluation of the end-bearing resistance of Helicast piles is similar to the methodology used for ungrouted helical piles using the Individual Bearing Method (described in *Section 1.7.1*).

1.10.4.3 Grout Strength Checks

Grout column strength must be evaluated at the service and ultimate loading conditions as follows:

$$P_a = 0.3 \cdot f'_c \cdot A$$

and

$$P_n = 0.6 \cdot f'_c \cdot A$$

Where:

P_a = The Maximum Axial Compression Capacity of the Grout Column at the Service Load (lb)

P_n = The Maximum Nominal Axial Compression Capacity of the Grout Column (lb)

f'_c = Nominal Compressive Strength for the Grout Mixture (generally defined as the 28-day compressive strength) (lb/in^2)

A = Cross-Sectional Area of the Grout Column (in^2)

When the predicted frictional resistance at the service load (Q_{fa}) is greater than the maximum axial compression capacity of the grout column at the service load (P_a), Q_{fa} must be limited to P_a.

Since the Helicast grout column frictional resistance is fully mobilized prior to full mobilization of the end-bearing capacity, the predicted frictional resistance must be checked against the nominal grout strength (P_n).

If the predicted nominal frictional resistance (Q_f) is greater than the nominal grout strength (P_n), then the total pile capacity must not include any contribution from end bearing. In this situation, the nominal pile capacity must be limited to the maximum nominal axial compression capacity of the grout column (P_n).

© 2024 Supportworks®
All Rights Reserved

1.10.4.4 Factors of Safety

For an Allowable Stress Design (ASD) approach, appropriate factors of safety must be applied to the nominal end-bearing and frictional resistance capacities. For end-bearing capacity, a factor of safety of 2.0 is typically used to calculate the allowable soil bearing capacity of a Helicast pile if torque is monitored during the installation. For frictional resistance, a factor of safety of 2.0 is typically used if a compression pile load test is performed to verify capacity, otherwise a factor of safety of 2.5 or more should be considered.

Higher or lower factors of safety may also be considered at the discretion of the helical pile designer or as dictated by local code requirements. Lower factors of safety may be considered for non-critical structures or temporary applications. Higher factors of safety may be considered for critical structures, structures sensitive to movement, or where soil conditions suggest that creep movement may be a concern.

1.10.4.5 Additional Design & Installation Considerations

Theoretical Versus Actual Grout Volume

Actual grout volume used for each pile should be compared with the theoretical grout volume. The theoretical grout volume is based on the displacement plate diameter and the length of the grout column, while also subtracting the volume of the encased central shaft. For soil profiles prone to necking or collapse, the actual grout volume may be less than the predicted grout volume. In this situation, grout take is generally considered adequate when the actual grout volume is about 85 percent or more of the theoretical volume. When the actual grout volume measured during installation differs from the theoretical grout volume by more than 15 percent, consideration should be given to derating the frictional resistance of the pile or performing a compression load test to verify capacity. The effective diameter of the pile determined from the actual grout volume take during pile installation may be used to determine the derated frictional resistance. When Helicast piles are installed in extremely soft, loose, or fluid soil, consideration should be given to using the standard lead soil displacement plate (with paddles) at all extension displacement plate locations to better maintain grout column dimensions.

When voids or fissures are present in the soil profile, the actual grout volume may be greater than the predicted grout volume which is indicative of grout loss. For this situation, when the actual grout volume exceeds the predicted grout volume by more than 15 percent, derating of the frictional resistance cannot be performed based on the actual grout volume and a compression load test should be used to verify capacity.

Displacement Plate Refusal

The lead soil displacement plate may have difficulty penetrating medium dense sands or stiff clays with SPT N-values greater than 20 to 25 bpf. When these soils and soil strengths are encountered, the lead displacement plate may "refuse" and the pile may experience "spin-off" resulting in a loss of torque and no appreciable further advancement. Modified "spiked" lead displacement plates (*Figure 1.60*) may be considered to help penetrate denser soil profiles.

In addition to the spiked lead displacement plate, standard lead displacement plates with paddles may also be considered at all of the extension displacement plate locations. The design professional should anticipate displacement plate refusal based on the soil profile determined from soil borings advanced prior to pile installation. Alternatively, when refusal prone soils are present, trial field installations of a recommended pile configuration could be used to

© 2024 Supportworks®
All Rights Reserved

verify the suitability of the Helicast pile design prior to production pile installation. Installers could also consider using the largest installation equipment practical for the project to provide more crowd on the pile to assist with advancement. Rubber-tired backhoes or larger equipment should be considered for Helicast pile installations whenever project conditions allow.

Final Installation Torque

The predicted final installation torque of a Helicast pile may be estimated using the equation from the Torque Correlation Method. For uncased piles, the target pile capacity (multiplied by a FOS) is simply divided by the default torque correlation factor for the central steel shaft size (see *Section 1.7.3*). Uncased Helicast piles, however, may require additional installation torque beyond that predicted for end-bearing capacity when the soil displacement plates are advanced through medium dense sand or stiff to very stiff clay. Additional resistance is realized above that required by a standard helical pile to simply advance helix plates through the soil. The amount of additional torque required to form the grout column is difficult to predict and is a function of the grout column diameter, grout column length, soil type and strength, and groundwater depth. The predicted final installation torque for cased piles is further dependent upon the casing diameter, length and material (steel, PVC, etc.). It may be necessary to perform trial installations to determine the installation torque requirements of a cased pile system. That said, Helicast piles are typically selected for projects where weak soil conditions exist above a competent bearing stratum. In those cases, the weak soils typically provide little resistance to the advancement of the soil displacement plates, grout column, and outer casing (if used) and therefore adjustment to the predicted torque may not be required.

Figure 1.60 Spiked Lead Displacement Plate

© 2024 Supportworks®
All Rights Reserved

1.11 Load Tests

Figure 1.61 Compression load test

Load tests are routinely completed on grouted and ungrouted helical piles to establish nominal and allowable pile capacities, determine pile head movement under load, verify design assumptions and capacities, and establish site-specific torque correlation factors (K_t). ICC-ES AC358 states that full-scale load tests on helical piles shall be conducted in general accordance with the following standards:

- ASTM D1143, Standard Test Methods for Deep Foundations Under Static Axial Compressive Load (*Figure 1.61* and *Figure 1.62*)
- ASTM D3689, Standard Test Methods for Deep Foundations Under Static Axial Tensile Load (*Figure 1.63* and *Figure 1.64*)
- ASTM D3966, Standard Test Methods for Deep Foundations Under Lateral Load

Figure 1.62 Close up of test pile, hydraulic cylinder, dial gauges and hemispherical bearing plate

© 2024 Supportworks®
All Rights Reserved

Figure 1.63 Tension load test

Figure 1.64 Tension load test within basement

AC358 further states that the Quick Test method of ASTM D1143 shall be used for compression tests. Additional discussion and guidance regarding the test procedures are provided in AC358 and within the respective standards.

For axial compression and tension tests, AC358 defines the ultimate pile capacity as the load achieved when plunging of the helix plate occurs or when the net deflection exceeds 10 percent of the average helix diameter, whichever occurs first. Net deflection is defined as the total pile head deflection minus the elastic shortening or lengthening of the shaft.

© 2024 Supportworks®
All Rights Reserved

1.12 Design Examples

Three common methods for determining helical pile end-bearing capacity are presented in *Section 1.7*. The individual bearing and cylindrical shear methods are used during the design phase to calculate or estimate the pile end-bearing capacity. The Torque Correlation Method is generally used to confirm or verify pile capacity during field installation. Foundation Supportworks engineers promote the use of the Individual Bearing Method for design calculations; therefore, that method will be used in the following examples. Helical pile product ratings, properties and details are provided in *Appendix 1A*.

Helicast piles use the same methodology as helical piles for determination of end-bearing capacity. The frictional resistance of the grout or casing with the surrounding soil may be evaluated by various methods depending upon project requirements or design professional preference. Four methods of evaluating the frictional resistance of Helicast piles are presented in *Section 1.10.4.1*, three of which are used in a design example in this section.

HelixPro® Helical Foundation Design Software for Professionals was created by Foundation Supportworks to simplify the design process for helical piles and tiebacks, including Helicast grouted piles. HelixPro is a web-based helical foundation design tool available free of charge to design professionals. For more information on HelixPro, visit the Introduction section of this manual and the Foundation Supportworks website: *www.OnStableGround.com*.

1.12.1 Helical Piles

Example 1

Helical piles are proposed to support a new structure. The proposed pile layout is shown on the foundation plan along with a service load of 30 kips in compression per pile with a factor of safety (FOS) = 2. Preliminary product selection suggests that the Model HP288 helical pile is the best fit for this load condition with an ultimate torque-rated capacity of 71.1 kips. The allowable torque-rated capacity would then be 35.5 kips with a FOS = 2. A geotechnical investigation was completed for the project and the soil profile is shown in *Figure 1.65*.

The helical piles will penetrate the upper fill and medium stiff clay to bear within the deeper very stiff clay. With the helix plates bearing entirely within the very stiff clay soil below a depth of 15 feet, we can use the Individual Bearing Method equation from *Section 1.7.1* for purely cohesive soils with $\Phi = 0$:

$$\mathbf{Q_u = \sum A_h(9c)}$$

Solve for the required helix plate area:

$\mathbf{A_h}$ = Q_u / 9c
$\mathbf{Q_u}$ = Design Working Load (30,000 lb) × FOS (2) = 60,000 lb
$\mathbf{c}$ = 3,000 lb/ft^2
$\mathbf{A_h}$ = 60,000 / (9)(3,000)
$\mathbf{A_h}$ = 2.22 ft^2

© 2024 Supportworks®
All Rights Reserved

Helix plate areas for the various shaft sizes can be found in *Appendix 1A*. For the Model HP288 shaft (2.875-inch O.D.), a total helix plate area of 2.22 ft² can be most efficiently achieved with a 10/12/14 triple-helix plate configuration.

$A_{10"}$ = 0.50 ft²
$A_{12"}$ = 0.74 ft²
$A_{14"}$ = 1.02 ft²

$\sum A_h$ = 2.26 ft²

Solve for the ultimate and allowable pile capacities:

$$Q_u = (2.26)(9)(3{,}000) = 61{,}000 \text{ lb} = 61 \text{ kips}$$

The allowable pile capacity,

$$Q_a = Q_u / FOS$$

$$Q_a = 61{,}000 / 2 = 30{,}500 \text{ lb} = 30.5 \text{ kips...OK}$$

Determine the required final installation torque in accordance with the equations and procedures of *Section 1.7.3*:

$$Q_u = K_t T$$

The equation can be rewritten to solve for torque:

$$T = Q_u / K_t$$

Without site-specific load testing and determination of K_t, we use the default value from ICC-ES AC358 for a 2.875-inch O.D. shaft, $K_t = 9$ ft^{-1}:

$$T = 60{,}000 / 9 = 6{,}667 \text{ ft-lb}$$

Install the helical piles to a final installation torque of at least 6,700 ft-lb.

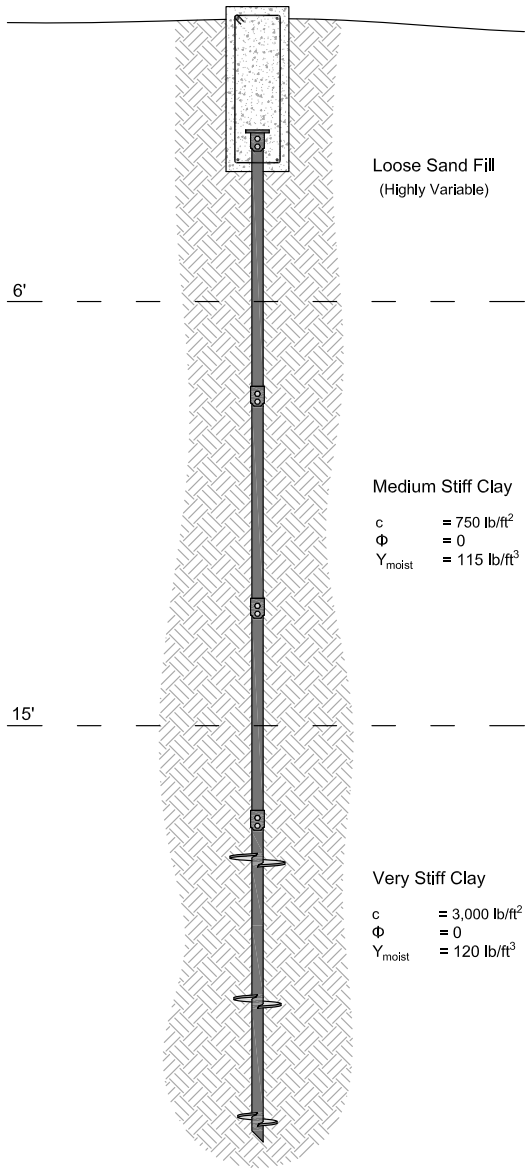

Figure 1.65 Example 1. Helical Pile Capacity

© 2024 Supportworks®
All Rights Reserved

Example 2

Grain conveyor towers will be constructed at an ethanol facility. The towers will be designed with four support legs, each leg designed for service loads of 40 kips in compression and 15 kips in tension/uplift. A FOS = 2 is required for both the compression and uplift pile capacities. A geotechnical exploration was completed for the project and the soil profile is shown in *Figure 1.66*. Groundwater was encountered at a depth of 10 feet below the surface. Preliminary product selection suggests that the Model HP350 helical pile is best suited to support the proposed loads. The HP350 has an ultimate torque-rated capacity of 122.5 kips and an allowable torque-rated capacity of 61.3 kips. Allowable mechanical compression and tension capacities are well above the service loads to be resisted. The helical piles will be embedded into the dense sand as shown in *Figure 1.66*.

For purely granular (frictional) soils with c = 0, the ultimate pile capacity can be determined from equation:

$$Q_u = \sum A_h \ (q' N_q)$$

Solve for the required helix plate area:

$$A_h = Q_u \ / \ q' N_q$$

The helix plates should be embedded several plate diameters into the dense sand to provide uplift resistance. This depth depends both on soil conditions and pile load. We can fine tune the embedment depth at a later point, but for an uplift load of 15 kips, we'll consider a minimum helix plate embedment of three diameters into the dense sand, as measured to the uppermost plate. A pile with an ultimate capacity of 80 kips often has three helix plates on the lead section. A 10/12/14 lead has a distance of 5.5 feet between the uppermost and bottommost plates. In granular soils, helical pile capacity is dependent on the effective overburden stress (refer back to *Section 1.7*). With these parameters in mind, we'll choose a trial depth of:

13 feet + 3.5 feet (depth of 14-inch plate into dense sand) + 2.75 feet (half the distance between bearing plates) = 19.3 feet.

The 14-inch diameter helix plate is located at a depth of 16.5 feet. Torque correlation factors determined in accordance with ICC-ES AC358 consider embedment depths for tension loading applications of 12 plate diameters or more from the ground surface. Therefore, the 14-inch plate should be located at a depth of at least 14 feet. That criteria is met in this example. The design professional shall select an appropriate embedment depth and torque correlation factor when the 12D criteria is not met.

q' = (110 lb/ft^3)(10 ft) + ((115-62.4) lb/ft^3)(3 ft) + ((130-62.4) lb/ft^3)(6.3 ft) = 1,683 lb/ft^2

Q_u = Service Load (40,000 lb) × FOS (2) = 80,000 lb

N_q = $1+0.56(12\Phi)^{\Phi / 54}$ = 42.6 (for Φ = 38°)

And the minimum required helix plate area is:

A_h = 80,000 / (1,683)(42.6)

A_h = 1.11 ft^2

© 2024 Supportworks®
All Rights Reserved

For the HP350 shaft (3.5-inch O.D.), a total helix plate area of at least 1.11 ft² can be achieved with a 10/12 double helix plate configuration.

$A_{10"}$ = 0.48 ft²
$A_{12"}$ = 0.72 ft²

$\sum A_h$ = 1.20 ft²

Solve for the ultimate and allowable pile capacities:

Q_u = (1.20)(1,683)(42.6) = 86,000 lb
= 86 kips
$Q_{a,\ compression}$ = 86,000 / 2 = 43,000 lb
= 43 kips…OK

To maintain the average vertical effective overburden stress at a depth of 19.3 feet, the 12-inch blade would be installed to a depth of 18.0 feet and the 10-inch blade would be installed to a depth of 20.5 feet. The upper helix plate is now 5.0 feet below the loose sand to dense sand interface. With this depth of embedment, we would expect the allowable uplift capacity to be similar to the allowable compressive capacity.

The vertical effective overburden stress, $q'_{12"}$, at 18.0 feet:

$q'_{12"}$ = (110 lb/ft³)(10 ft) + ((115-62.4) lb/ft³)(3 ft) + ((130-62.4) lb/ft³)(5.0 ft)
= 1,595 lb/ft²

A critical depth of 20 feet is used for this design. See *Section 1.7.1.1* for more information related to the critical depth. Since the 10-inch plate is below the critical depth, the vertical effective overburden stress, $q'_{10"}$, is equal to the effective stress at the critical depth.

$q'_{10"}$ = (110 lb/ft³)(10 ft) + ((115-62.4) lb/ft³)(3 ft) + ((130-62.4) lb/ft³)(7 ft)
= 1,731 lb/ft²

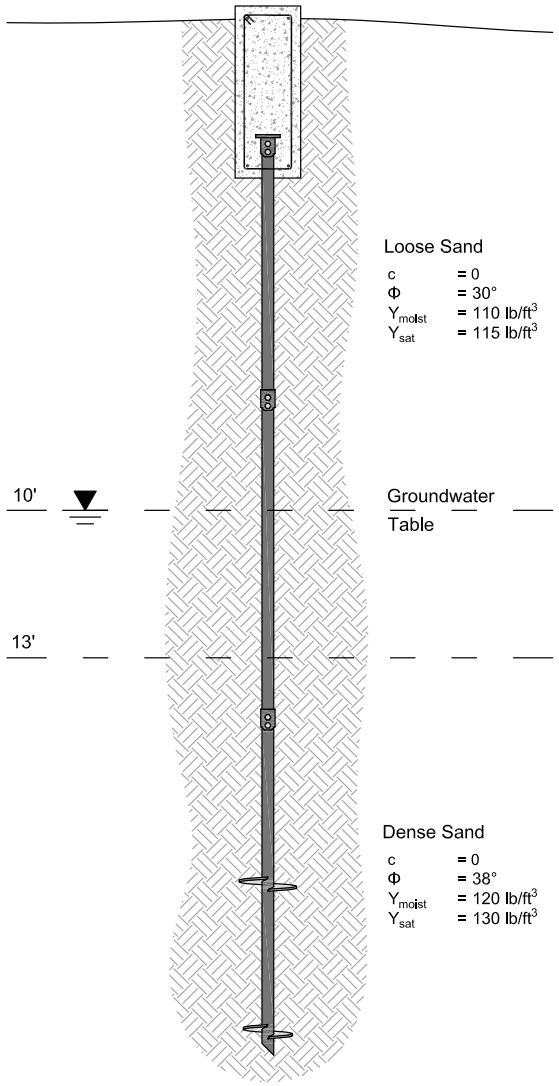

Figure 1.66 Example 2. Helical Pile Capacity

© 2024 Supportworks®
All Rights Reserved

Solve for the ultimate and allowable pile capacities:

$Q_u = \Sigma A_h(q'N_q)$

$Q_u = (0.72)(1{,}595)(42.6) + (0.48)(1{,}731)(42.6) = 84{,}310$ lb = 84.3 kips

The allowable pile capacity:

$Q_a = Q_u$ / FOS

$Q_{a,\ compression,\ uplift} = 84.3 / 2 = 42.1$ kips… OK

Again, with this depth of embedment, we would expect the allowable uplift capacity to be similar to the allowable compressive capacity.

To be very conservative and consider that the loose sand above the 12-inch plate could have some effect on the uplift capacity, we could model the soil strength above the 12-inch plate to represent the loose sand strata.

$$Q_u = \sum A_h(q'N_q)$$

With the loose sand profile extending down to the 12-inch plate, the vertical effective overburden stress, $q'_{12"}$, at 18.0 feet is:

$q'_{12"} = (110\ lb/ft^3)(10\ ft) + ((115-62.4)\ lb/ft^3)(8\ ft) = 1{,}521\ lb/ft^2$

The vertical effective overburden stress, $q'_{10"}$, at 20.5 feet with a critical depth of 20 feet is:

$q_{'10"} = (110\ lb/ft^3)(10\ ft) + ((115-62.4)\ lb/ft^3)(8\ ft) + ((130-62.4)\ lb/ft^3)(2\ ft)$

$= 1{,}656\ lb/ft^2$

$N_{q,\ 12"} = 15.7$ (for $\Phi = 30°$)

$N_{q,\ 10"} = 42.6$ (for $\Phi = 38°$)

$Q_u = (0.72)(1{,}521)(15.7) + (0.48)(1{,}656)(42.6) = 51{,}055$ lb = 51.0 kips

$Q_{a,uplift} = 51.0 / 2 = 25.5$ kips…OK

Determine the required final installation torque in accordance with the equations and procedures of *Section 1.7.3*:

$$Q_u = K_t T$$

The equation can be rewritten to solve for torque:

$$T = Q_u / K_t$$

Without site-specific load testing and determination of K_t, we use the default value from ICC-ES AC358 for a 3.5-inch O.D. shaft, $K_t = 7\ ft^{-1}$:

$T = 80{,}000 / 7 = 11{,}428$ ft-lb

Install the helical piles to a final installation torque of at least 11,500 ft-lb.

© 2024 Supportworks®
All Rights Reserved

Example 3

Helical tiebacks are being considered to stabilize an existing 12-inch thick reinforced concrete retaining wall. A geotechnical investigation found the retained soils to consist of silty sand. The design engineer proposed a Model HA150 shaft (1.5-inch solid square shaft) with a 10/12/14 helix plate configuration. The design length of the tieback was selected to meet minimum length criteria for the closest helix plate (14-inch plate) of 12D from the wall face and 5D from the assumed soil failure plane. Since the 12D criterion governed, the 14-inch helix plate was set approximately 14 feet from the wall face (longitudinally along the anchor). See *Section 1.8* for additional information regarding the design of helical tiebacks. The soil parameters and preliminary tieback design are shown on *Figure 1.67*. The engineer must determine the allowable tieback capacity so tieback spacing can be established.

$$Q_u = \sum A_h(q'N_q)$$

$A_{14"}$ = 1.05 ft²
$A_{12"}$ = 0.77 ft²
$A_{10"}$ = 0.53 ft²
$q'_{14"}$ = (120)(7.5) = 900 lb/ft²
$q'_{12"}$ = (120)(8.0) = 960 lb/ft²
$q'_{10"}$ = (120)(8.4) = 1,008 lb/ft²
N_q = $1+0.56(12\Phi)^{\Phi/54}$ = 15.7
Q_u = (1.05)(900)(15.7) + (0.77)(960)(15.7) + (0.53)(1,008)(15.7) = 34,800 lb = 34.8 kips
Q_a = 34.8 / 2 (FOS) = 17.4 kips

The Model HA150 shaft has an allowable mechanical (galvanized corroded) capacity of 27.1 kips….OK

The horizontal and vertical components of the tieback force can be calculated in accordance with *Section 1.8.1*.

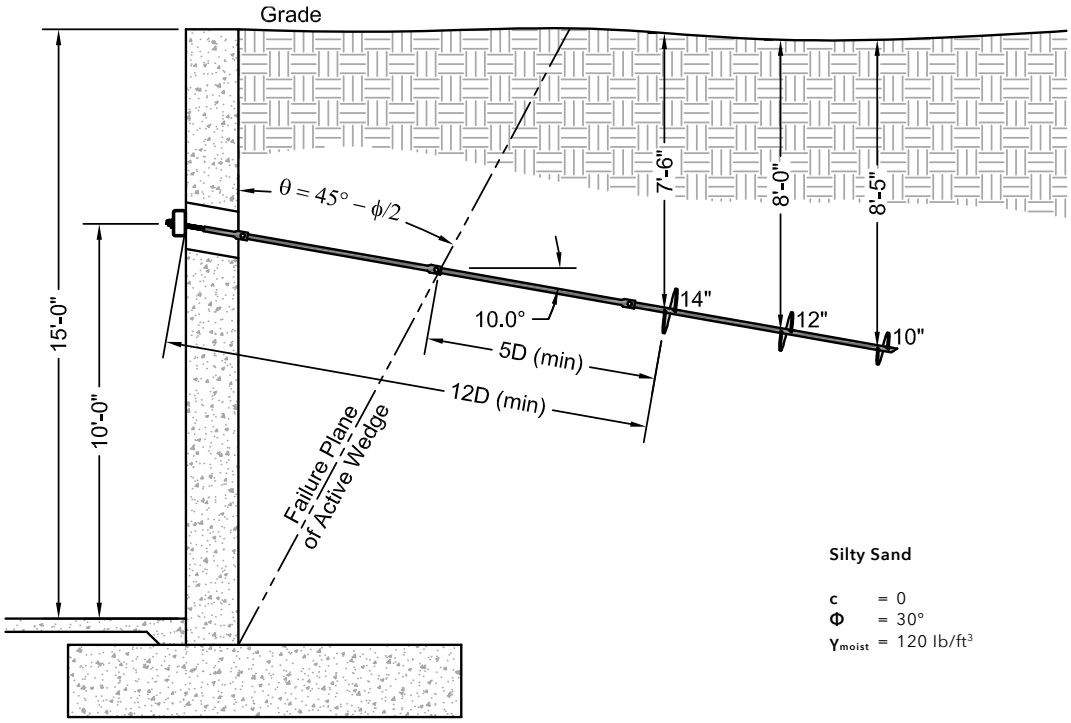

Figure 1.67 Example 3. Helical Tieback Capacity

© 2024 Supportworks®
All Rights Reserved

Example 4

New construction Helicast grouted piles are specified for a high school building addition. The piles will be designed for service loads of 50 kips in compression and 35 kips in tension. The Helicast piles will be incorporated into interior pile caps and exterior grade beams with the top of piles 3 feet below existing grade. A pile load test will not be performed and a FOS = 2.5 is required for the frictional resistance and a FOS = 2 is required for compression and tension end bearing. The grout 28-day compressive strength (f'_c) must be at least 6,000 psi. A geotechnical exploration was completed for the project and the soil profile is shown in *Figure 1.68*. Groundwater was encountered at a depth of 10 feet below the ground surface.

Depth (ft)	Soil Type	SPT N-value (bpf)	c (psf)	γ_{eff} (pcf)	Φ (deg)
0	Sand Fill	4	0	80	28.5
10	Sand	15	0	58	31.6
40	Sand	25	0	64	34.4
55	Sand	32	0	67	36.4

Figure 1.68 Example 4: Soil Profile

Preliminary product selection and grout column dimensions for the Helicast pile included the Model HA175 central steel shaft with a 7-inch diameter grout column. The HA175 central steel shaft has a shaft torsional rating of 10,000 ft-lb to provide an allowable torque-correlated end-bearing tension capacity with a FOS of 2.0 that exceeds 35 kips. The HA175 also has shaft allowable mechanical compression and tension capacities that exceed the design service loads for the project. A 7-inch diameter grout column is generally considered "standard" with the HA175, although other grout column diameter options are available. The geotechnical exploration indicates that the sandy soil increases in strength with depth based on the measured standard penetration test (SPT) values. With an SPT N-value of 25 bpf at a depth of 40 feet, it is possible that the lead displacement plates may refuse at this depth. Therefore, the preliminary design will consider a grout column extending from depths of 3 feet to 40 feet below existing grade (total grout column length of 37 feet) with a 10/12/14 helix plate arrangement as shown in *Figure 1.69*.

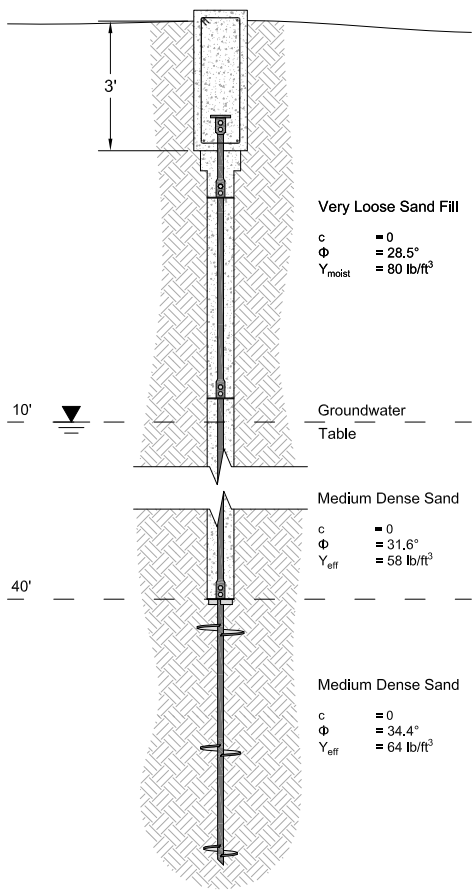

Figure 1.69 Example 4: Helicast Pile Capacity

© 2024 Supportworks®
All Rights Reserved

For purely granular (frictional) soils with c=0, the ultimate pile capacity in compression can be determined from:

$$Q_{u,\ compression} = \sum A_h(q'N_q) + \sum f_s S$$

For a Helicast pile with an HA175 tip depth of 47 ft and a 10/12/14 helix plate arrangement, the plate depths and areas would be:

$H_{10"} = 46.6$ ft $\quad A_{10"} = 0.52$ ft^2
$H_{12"} = 44.1$ ft $\quad A_{12"} = 0.76$ ft^2
$H_{14"} = 41.1$ ft $\quad A_{14"} = 1.05$ ft^2

Based on the soil profile shown in *Figure 1.68* and a critical depth of 20 feet, the effective stress and N_q values at these depths are:

$q'_{10"}$ = $q'_{12"} = q'_{14"}$ = (80)(10) + (58)(10)
= 1,380 lb/ft^2
N_q = 27 for Φ = 34.4° (refer back to *Figure 1.39*)

The ultimate end-bearing capacity of the Helicast pile in compression and tension would be:

$Q_{u,\ end\ bearing} = \sum A_h(q'N_q)$
$Q_{u,\ end\ bearing}$ = (0.52 + 0.76 + 1.05)(1,380)(27)
= 86,816 lb = 86.8 kips
$Q_{a,\ end\ bearing}$ = 86.8 kips/2 (FOS) = 43.4 kips

Since the allowable end-bearing capacity of 43.4 kips is greater than the specified tension service load of 35 kips, the assumed pile configuration is suitable for the tension loading criteria.

The nominal (ultimate) frictional resistance (Q_f) of the shaft would be determined as follows for the three previously described methods:

NAVFAC DM7.2 Method:

$$Q_f = \sum_{H_1}^{H_2} K_h \cdot q' \cdot \tan(\delta) \cdot S$$

The earth pressure coefficient (K_h) = 1.0

The soil profile along the grout column from depths of 3 to 40 feet is broken into three sections:

Soil layer 1; from 3 to 10 feet:

$q'_{3\ ft}$ = (3)(80) = 240 lb/ft^2
$q'_{10\ ft}$ = (10)(80) = 800 lb/ft^2
q'_{avg} = (240 + 800)/2 = 520 lb/ft^2
$\tan(\delta)$ = tan(0.75Φ) = tan[(0.75)(28.5)]
= 0.391
S = (7 ft)(π)(7 in./12 in/ft) = 12.8 ft^2
$Q_{f,\ 3–10\ ft}$ = (1.0)(520)(0.391)(12.8) = 2,602 lb

Soil layer 2; from 10 to 20 feet:

$q'_{10\ ft}$ = 800 lb/ft^2
$q'_{20\ ft}$ = (10)(80) + (10)(58) = 1,380 lb/ft^2
q'_{avg} = (800 + 1,380)/2 = 1,090 lb/ft^2
$\tan(\delta)$ = tan[(0.75)(31.6)] = 0.439
S = (10 ft)(π)(7 in./12 in/ft) = 18.3 ft^2
$Q_{f,\ 10–20\ ft}$ = (1.0)(1,090)(0.439)(18.3) = 8,757 lb

Soil layer 3; from 20 to 40 feet:

$q'_{20\ ft}$ = 1,380 lb/ft^2
$q'_{40\ ft}$ = 1,380 lb/ft^2 (critical depth at 20 feet)
$q'avg$ = 1,380 lb/ft^2
$\tan(\delta)$ = tan[(0.75)(31.6)] = 0.439
S = (20 ft)(π)(7 in./12 in/ft) = 36.7 ft^2
$Q_{f,\ 20–40\ ft}$ = (1.0)(1,380)(0.439)(36.7) = 22,234 lb

The total nominal frictional resistance along the grout column is the sum of the nominal frictional resistances from the individual soil layers.

$Q_{f,total}$ = 2,602 + 8,757 + 22,234 = 33,593 lb
= 33.6 kips

© 2024 Supportworks®
All Rights Reserved

The ultimate pile capacity is the sum of the end-bearing capacity and the frictional resistance:

$Q_{u,\ compression}$ = 86.8 + 33.6 = 120.4 kips

The allowable pile capacity is determined using the specified factors of safety of 2.0 for end bearing and 2.5 for frictional resistance:

$Q_{a,\ compression}$ = (86.8/2) + (33.6/2.5) = 56.8 kips

The calculated allowable pile compression capacity of 56.8 kips is greater than the specified compression service load of 50 kips, therefore the design is acceptable.

Alpha-Das Method:

For granular soils, the nominal frictional resistance is determined using the same equation as that used for the NAVFAC DM7.2 method:

$$Q_f = \sum_{H_1}^{H_2} K_h \cdot q' \cdot \text{Tan}(\delta) \cdot S$$

The earth pressure coefficient (K_h) is:

$$K_h = 1.4 \cdot (1-\sin\Phi)$$

For a grout column surface contacting the surrounding soil, the interface friction angle is:

$$\delta = 0.8 \cdot \Phi$$

The soil profile along the grout column from depths of 3 to 40 feet is broken into three sections:

Soil layer 1; from 3 to 10 feet:

K_h = (1.4)[1−sin(28.5)] = 0.732
q'_{avg} = (240 + 800)/2 = 520 lb/ft^2
tan(δ) = tan(0.8Φ) = tan[(0.8)(28.5)] = 0.420
S = (7 ft)(π)(7 in./12 in/ft) = 12.8 ft^2
$Q_{f,\ 3-10\ ft}$ = (0.732)(520)(0.420)(12.8) = 2,046 lb

Soil layer 2; from 10 to 20 feet:

K_h = (1.4)[1-sin(31.6)] = 0.666
q'_{avg} = (800 + 1,380)/2 = 1,090 lb/ft^2
tan(δ) = tan[(0.8)(31.6)] = 0.472
S = (10 ft)(π)(7 in./12 in/ft) = 18.3 ft^2
$Q_{f,\ 10-20\ ft}$ = (0.666)(1,090)(0.472)(18.3)
= 6,270 lb

Soil layer 3; from 20 to 40 feet:

K_h = (1.4)[1−sin(31.6)] = 0.666
q'_{avg} = 1,380 lb/ft^2 (critical depth at 20 ft))
tan(δ) = tan[(0.8)(31.6)] = 0.472
S = (20 ft)(π)(7 in./12 in/ft) = 36.7 ft^2
$Q_{f,\ 20-40\ ft}$ = (0.666)(1,380)(0.472)(36.7)
= 15,921 lb

The total frictional resistance along the grout column is the sum of the frictional resistances from the individual soil layers.

$Q_{f,\ total}$ = 2,406 + 6,270 + 15,921 = 24,597 lb
= 24.6 kips

The ultimate pile capacity is the sum of the end-bearing capacity and the frictional resistance:

$Q_{u,\ compression}$ = 86.8 + 24.6 = 111.4 kips

The allowable pile capacity is determined using the specified factors of safety of 2.0 for end bearing and 2.5 for frictional resistance:

$Q_{a,\ compression}$ = (86.8/2) + (24.6/2.5) = 53.2 kips

The calculated allowable pile compression capacity of 53.2 kips is greater than the specified compression service load of 50 kips, therefore the design is acceptable.

© 2024 Supportworks®
All Rights Reserved

Gouvenot Method:

The soils observed between depths of 3 to 10 feet are Type 2 soils with friction angles of $0° < \theta < 30°$, and the applicable unit frictional resistance equation is:

$$f_s = q' \cdot \sin\Phi + c \cdot \cos\Phi$$

Since there is no cohesion, this equation becomes:

$$f_s = q' \cdot \sin\Phi$$

The soils observed between depths of 10 to 40 feet are Type 1 soils with friction angles of $30° \leq \theta < 45°$, and the applicable unit frictional resistance equation is:

$$f_s = q' \cdot \tan\Phi$$

The soil profile along the grout column from depths of 3 to 40 feet is broken into three sections:

Soil layer 1; from 3 to 10 feet:

q'_{avg} = (240 + 800)/2 = 520 lb/ft^2
f_s = (520)[sin(28.5)] = 248 lb/ft^2
S = (7 ft)(π)(7 in./12 in/ft) = 12.8 ft^2
$Q_{f,\ 3-10\ ft}$ = (fs)(S) = (248)(12.8) = 3,174 lb

Soil layer 2; from 10 to 20 feet:

q'_{avg} = (800 + 1,380)/2 = 1,090 lb/ft^2
f_s = (1,090)[tan(31.6)] = 671 lb/ft^2
S = (10 ft)(π)(7 in./12 in/ft) = 18.3 ft^2
$Q_{f,\ 10-20\ ft}$ = (671)(18.3) = 12,279 lb

Soil layer 3; from 20 to 40 feet:

q'_{avg} = 1,380 lb/ft^2 (critical depth at 20 feet)
f_s = (1,380)[tan(31.6)] = 849 lb/ft^2
S = (20 ft)(π)(7 in./12 in/ft) = 36.7 ft^2
$Q_{f,\ 20-40\ ft}$ = (849)(36.7) = 31,158 lb

The total friction resistance along the grout column is the sum of the frictional resistance from the individual soil layers.

$Q_{f,\ total}$ = 3,174 + 12,279 + 31,158 = 46,611 lb
= 46.6 kips

The ultimate pile capacity is the sum of the end-bearing capacity and the frictional resistance:

$Q_{u,\ compression}$ = 86.8 + 46.6 = 133.4 kips

The allowable pile capacity is determined using the specified factors of safety of 2.0 for end bearing and 2.5 for frictional resistance:

$Q_{a,\ compression}$ = (86.8/2) + (46.6/2.5) = 62.0 kips

The calculated allowable pile compression capacity of 62.0 kips is greater than the specified compression service load of 50 kips, therefore the design is acceptable.

© 2024 Supportworks®
All Rights Reserved

Grout Strength Check:

Grout column must be evaluated at the service and nominal limit states. The maximum axial compression capacity of the grout column (P_a) at the service load is:

$$\mathbf{P_a} = (0.3)(f'_c)(A)$$
$$\mathbf{P_a} = (0.3)(6{,}000)[(\pi)(49)/4] = 69{,}272 \text{ lb} = 69.3 \text{ kips}$$

The maximum nominal axial compression capacity of the grout column (P_n) is:

$$\mathbf{P_n} = (0.6)(f'c)(A)$$
$$\mathbf{P_n} = (0.6)(6{,}000)[(\pi)(49)/4] = 138{,}544 \text{ lb} = 138.5 \text{ kips}$$

The calculated allowable and nominal frictional resistances for the three methods are shown in *Figure 1.70*.

Method	Allowable Frictional Resistance (kips)	Nominal Frictional Resistance (kips)
NAVFAC DM7.2	13.4	33.6
Alpha-Das	9.8	24.6
Gouvenot	18.6	46.6

Figure 1.70

The pile passes the service and nominal strength checks since the allowable and nominal frictional resistances of all three methods are less than P_a and P_n, respectively.

Shaft Torsion Check:

The end-bearing component of the ultimate pile capacity is 86.8 kips. Using a torque correlation factor of 10 ft^{-1} for the HA175 shaft, the predicted final termination torque for end bearing is 8,680 ft-lb. Since the predicted final installation torque is less than the shaft torsional rating of the HA175 central steel shaft (10,000 ft-lb), the HA175 shaft is suitable for the design.

© 2024 Supportworks®
All Rights Reserved

1.13 Installation

1.13.1 General Information

1.13.1.1 Preparation

All utilities, pipelines, cables, or any other service line or buried structure shall be identified and marked prior to any excavation or installation of helical piles, tiebacks and soil nails. The appropriate utility locating agency should be contacted in advance of the project, allowing adequate notification time frames mandated by the agency.

Call number "811" is a federally mandated FCC designated N-11 number. The 811 number is a national "Call Before You Dig" phone number designated by the FCC to eliminate the confusion of multiple "Call Before You Dig" numbers, minimize damages to underground utilities and help save lives. One easy phone call to 811 quickly begins the process of getting underground utility lines marked. Local One Call Center personnel will then notify affected utility companies, who will send crews to mark underground lines free of charge.

Foremen and installers should be mindful of potential hazards and understand the meanings and definitions of common tags provided by the American National Standards Institute (ANSI) and the Occupational Safety and Health Administration (OSHA) (*Figure 1.71*).

ANSI Z535.5 Definitions:

- **Danger:** Indicate[s] a hazardous situation which, if not avoided, will result in death or serious injury. The signal word "DANGER" is to be limited to the most extreme situations. DANGER [signs] should not be used for property damage hazards unless personal injury risk appropriate to these levels is also involved.
- **Warning:** Indicate[s] a hazardous situation which, if not avoided, could result in death or serious injury. WARNING [signs] should not be used for property damage hazards unless personal injury risk appropriate to this level is also involved.
- **Caution:** Indicate[s] a hazardous situation which, if not avoided, could result in minor or moderate injury. CAUTION [signs] without a safety alert symbol may be used to alert against unsafe practices that can result in property damage only.
- **Notice:** [this header is] preferred to address practices not related to personal injury. The safety alert symbol shall not be used with this signal word. As an alternative to "NOTICE" the word "CAUTION" without the safety alert symbol may be used to indicate a message not related to personal injury.

The OSHA 1910.145 definitions for tags are as follows:

- **Danger:** "shall be used in major hazard situations where an immediate hazard presents a threat of death or serious injury to employees. Danger tags shall be used only in these situations."
- **Warning:** "may be used to represent a hazard level between "Caution" and "Danger," instead of the required "Caution" tag, provided that they have a signal word of "Warning," an appropriate major message, and otherwise meet the general tag criteria of paragraph (f)(4) of this section."
- **Caution:** "shall be used in minor hazard situations where a non-immediate or potential hazard or unsafe practice presents a lesser threat of employee injury."

Figure 1.71 ANSI and OSHA Tag Definitions

© 2024 Supportworks®
All Rights Reserved

1.13.1.2 Crowd

Axial force or "crowd" is applied to helical piles, tiebacks and soil nails during installation to advance the helix plates into the soil. The density or stiffness of the soil dictates the amount of crowd necessary to advance the pile to a depth where the helix plates can then provide downward thrust. Multi-helix pile configurations often install easier than single-helix configurations due to the thrust provided by the additional helix plates. At a depth typically just a few feet below the surface, little to no external force is necessary unless deeper, dense soil layers or obstructions are encountered. Additional crowd may be required to either penetrate the dense layers or fully embed the helix plates into dense bearing soil. In soft soil conditions, it is important not to over-crowd or restrain the advancement of the pile. Applying the proper crowd is critical to maintain the penetration rate and minimize disturbance or mixing of the soils, especially within the final 3 to 5 feet of installation prior to pile termination.

Installation equipment not only needs to be sized correctly to provide the proper hydraulic flow and hydraulic fluid pressure for the drive head, but also to provide the proper crowd for pile advancement. The lack of appropriate machine weight during installation into dense soils or weathered bedrock may limit pile penetration, resulting in less than anticipated tensile or compressive capacities.

1.13.1.3 Penetration Rate

Helical piles, tiebacks and soil nails should ideally be advanced into the soil at a rate equal to the pitch of a properly formed, conforming helix plate per ICC-ES AC358, i.e., 3 inches per revolution. ICC-ES AC358 further states that pile advancement shall equal or exceed 85 percent of the helix pitch per revolution at the time of final torque measurement. Crowd may be required to maintain adequate pile penetration or advancement. Installation speeds should be no more than 25 revolutions per minute (rpm) to minimize soil disturbance. It is good practice to further reduce installation speeds to 10 rpm or less within the final 3 to 5 feet so the operator can concentrate on pile alignment, crowd and rate of advancement. Installation speeds may be further restricted by soil conditions or operating equipment.

1.13.2 Equipment

1.13.2.1 Drive Heads

Proper selection of the drive head should consider the torsional rating of the helical shaft, project installation torque requirements, and the output pressure and flow rate of the hydraulic system to be used. All drive heads have optimum operating specifications that should be partnered with an appropriate hydraulic system to achieve maximum performance in the field. Foundation Supportworks engineers recommend that drive heads have a rated torque output capacity at least 15 percent higher than what is required by project specifications.

© 2024 Supportworks®
All Rights Reserved

Hydraulic hoses and fittings should be rated for the operating pressures required and specified by the drive head manufacturer. Hoses and fittings should be checked periodically for damage and replaced when in question. Failure to follow manufacturer's specifications may result in equipment failure and/or personal injury.

Drive heads are generally designed with bail assemblies for mounting to machinery such as skid steers (*Figure 1.72*), mini-excavators (*Figure 1.73*), backhoes (*Figure 1.74*), and full-size excavators (*Figure 1.75*). Smaller, lighter-weight drive heads may also be used with hand-held equipment for interior or limited access installations. Machinery used to power and operate drive heads should have sufficient weight and structural capacity to handle the output torque. Although conservative, a basic rule of thumb has been a pound of machine weight for each ft-lb of torque from the drive head. Machine weight and structural capacity become increasingly more important with greater output torque.

Figure 1.72 Skid steer

Figure 1.74 Backhoe

Figure 1.73 Mini-excavator

Figure 1.75 Excavator

© 2024 Supportworks®
All Rights Reserved

The following machine specifications are required:

- The machine should have a bi-directional auxiliary circuit to power the drive head.
- Hydraulic fluid pressure output from the circuit used to power the drive head should meet the drive head specifications. On some machines, it may be necessary to adjust the relief valve on the machine's auxiliary system hydraulic pump to provide the appropriate pressure specified by the drive head manufacturer.
- The flow rate of hydraulic fluid to the drive head should meet the drive head specifications for optimum performance during installation.
- The machine should have adequate weight to resist torsional forces from the drive head and to allow for proper crowd during installation.

Foundation Supportworks offers portable hand-held equipment for operating smaller, lighter-weight drive heads when access with machinery is not feasible. The drive heads can be powered by auxiliary hydraulic circuits of machinery or by portable hydraulic power packs. The power source should meet the operating specifications of the drive head. A portable, remote valve assembly allows for safe operation of the drive head when used with the hand-held equipment.

The drive head is mounted to the frame of the hand-held equipment (*Figure 1.76*) so that it can be supported and operated by at least two technicians. To provide the reaction for the output torque, a telescoping torque arm is attached to the frame of the hand-held equipment. The torque arm (*Figure 1.77*) is secured against the ground, a wall, or other suitable structure or device capable of resisting the torsional forces transferred to the end of the torque arm by the drive head. Hand-held equipment is typically limited to a maximum installation torque of 6,000 ft-lb. Please contact the Foundation Supportworks Engineering Department with any questions regarding the rated capacities of hand-held equipment.

Figure 1.76 Hand-held equipment

Figure 1.77 Torque arm

© 2024 Supportworks®
All Rights Reserved

Installers and personnel in the immediate work area should be properly trained in the safe operation and use of hand-held equipment. The torque arm shall be properly restrained for the direction of arm rotation. Reversing the rotation also requires restraint of the torque arm in the opposite direction. Personnel in the work area should understand the direction that the torque arm will tend to swing and position themselves in a safe location (considering any possibility that the torque arm could break free from its restraint). Appropriate installation geometry should be maintained during pile installation. The ideal position for the torque arm is as follows:

1) Arm is fully extended and is restrained at its maximum radius from the pile shaft.

2) Arm is at an angle which is perpendicular to the pile shaft.

Actual installation geometry is adjustable and will vary, but in no circumstance shall the torque arm be placed at an angle in excess of 35 degrees from perpendicular and in no circumstance shall the torque arm restraint be placed at a distance less than 7 feet from the axis of the pile shaft. The capacity of the hand-held equipment decreases significantly when used outside of these parameters. The force that will be required to restrain the torque arm will also vary, but even within the operation parameters just described, restraint forces can approach 1,000 lb. The torque arm restraint is therefore recommended to be capable of resisting a force of at least 1,500 lb. Safe operation of the hand-held equipment also requires lateral restraint at the drive head.

Drive heads used with hand-held installation equipment should not be operated at speeds exceeding 10 rpm. Operators shall be ready at the controls and prepared to shut down the equipment at any moment.

Failure to properly restrain and operate the hand-held installation equipment per these guidelines can result in serious injury or death.

1.13.2.2 Installation Tooling

Installation tooling consists of the components that are attached in-line between the drive head and the helical pile, generally an output shaft adaptor and a product adaptor. The drive head output shaft is typically a hexagonal or square shape with measurements ranging from 2 inches to 4 inches across flats. The output shaft adaptor slides over and is pinned to the output shaft of the drive head (*Figure 1.78*).

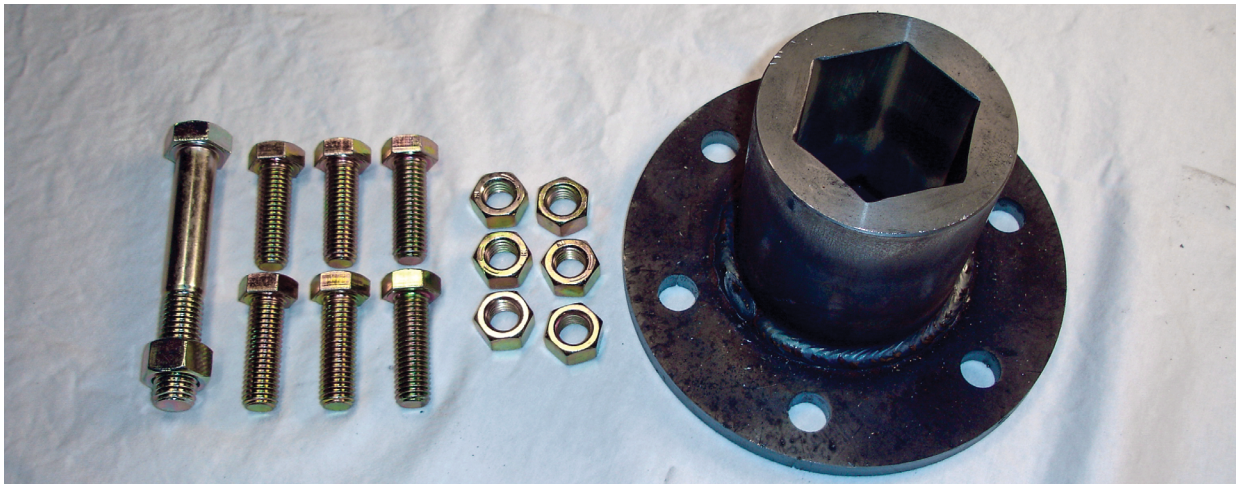

Figure 1.78 Hexagonal output shaft adaptor

© 2024 Supportworks®
All Rights Reserved

The flange plate of the output shaft adaptor has a bolt hole pattern with hole spacing and diameters to allow bolting to the appropriate product adaptor for the dimensions of helical pile shaft to be installed. Product adaptors are available for the various sizes of hollow round shaft as well as for solid square shaft. The ends of round shaft helical piles generally slide into the product adaptors and are connected with temporary hitch pins, bent arm pins, or bolts (*Figure 1.79*). Solid-stock internal product adaptors may also be used for certain sizes of the round shaft helical product line. The ends of square shaft helical piles and tiebacks slide into a square, socket-like product adaptor (*Figure 1.80*).

Installation tooling may also include an in-line torque monitoring device as discussed in the following section.

Figure 1.79 Round shaft product adaptor

Figure 1.80 Square shaft adaptor

© 2024 Supportworks®
All Rights Reserved

Monitoring torque is a key process during the installation of helical piles since the installation torque directly correlates to pile capacity in accordance with the Torque Correlation Method described in *Section 1.7.3*. A number of devices are available to assist in determining torque and, ultimately, the calculation of pile capacity. These devices range from simple pressure gauges to shear pin indicators to more sophisticated electronic data acquisition systems.

Dual hydraulic pressure gauges (*Figure 1.81* and *Figure 1.82*) can be used to measure the "pressure drop" across a hydraulic drive head. This method is based on the principle that the work output of the drive head is directly related to measurement of the pressure drop across the drive head as force is applied. To measure the pressure drop, one gauge is placed in line with the feed from the hydraulic pump or machine to the drive head. A second gauge is placed in line with the return from the drive head back to the pump.

Figure 1.81 Dual pressure gauges

The return line pressure is subtracted from the feed line pressure resulting in the determination of "differential" pressure. The installation torque can be calculated relative to the differential pressure by applying the gear motor multiplier (GMM) provided by the drive head manufacturer. Most drive head manufacturers provide correlation charts for quick conversion of differential pressure to torque.

Figure 1.82 Monitoring pressure gauges while installing square shaft helical anchor

The return line gauge is an indicator of the hydraulic system "back pressure", which is variable with each machine and may range from 50 psi to over 800 psi. Systems with high return line pressures may damage a hydraulic drive head. The installation of a "case drain" on the hydraulic drive head can prevent damage to the drive head seal. A case drain line is simply directed back to the hydraulic fluid reservoir.

Some operators choose to use a single gauge on the feed line side only, rather than to use a second gauge to measure back pressure. This can result in decreased accuracy and overestimation of applied torque if back pressure is underestimated or ignored all together.

Differential pressure cylinders such as the DP-1, are hydraulic cylinders with opposing pistons within the cylinder body that measure the differential pressure on a single gauge. Similar to the use of dual pressure gauges, the determination of torque is based on the pressure drop across the drive head and, subsequently, the differential pressure to torque correlation.

© 2024 Supportworks®
All Rights Reserved

Differential pressure gauge technology is based on similar principals as the DP-1. Differential pressure gauges still measure the feed and return line pressures to determine the pressure drop across the drive head, but with ports for the lines within a single-gauge body. This differential pressure, as in the case of the Tru Torque model (*Figure 1.83*), is related to torque by the GMM for a specific drive head.

The dial face then provides a reading of torque rather than pressure. A different differential pressure gauge is therefore needed for each drive head.

Figure 1.83 Tru Torque gauge

Electronic pressure indicators measure the feed and return line pressures with electronic pressure transducers. Low voltage power is supplied to the unit by either a portable battery pack or a direct connection to an appropriate low voltage source generated by the installation equipment. Instead of analog gauges, electronic indicators such as the PT Tracker by Marian Technologies (*Figure 1.84*) typically have a digital screen output to provide a direct reading of torque, which is generated by a pre-programmed relationship of the pressure drop across the drive head and the GMM for the drive head being used. Some units have a selector switch that allows for torque readings with various drive heads. Some models also allow for data acquisition and/or blue tooth technology.

Figure 1.84 PT tracker

Shear pin torque limiters are mechanical in-line devices consisting of two plate assemblies mounted to a central shaft, but allowed to rotate independently. Each plate has a series of holes around the perimeter that allow for insertion of steel pins with a given shear strength. The pins are placed in the holes of the top plate to extend past the interface between plates and into the holes of the bottom plate. The pins bridge across the interface and restrict the independent rotation of the plates until sufficient torque is applied. The pins will theoretically shear simultaneously when the torque applied exceeds the summed capacity rating of the pins. For example, if 3,000 ft-lb of torque is required for a helical pile installation, six pins rated at 500 ft-lb each would be inserted into the housing. The pins should shear simultaneously when 3,000 ft-lb of torque is reached.

Mechanical dial indicators are in-line mechanical devices consisting of a torsion bar mounted between two separate, bolted flange plates. As torque is applied to the in-line mechanical dial indicator, the twist in the torsion bar is converted to dial gauge movement which is calibrated in torque units (ft-lb or N-m). This device can be used to establish a torque correlation between pressure gauges and a specific drive head through dynamic testing.

© 2024 Supportworks®
All Rights Reserved

The **shaft twist method** is simply a visual observation of the shaft deformation or twist that occurs with square bar helical products (*Figure 1.85*) during installation. With this method, the installer must know the range of torque required to initiate plastic deformation in the shaft for the given product. This method does not provide an accurate or reliable indication of torque and should not be used solely as a measure or estimate of applied torque.

Figure 1.85 Shaft twist

Electronic torque transducers such as the Pro-Dig Intelli-Tork® are placed in line with the drive tooling. Torque is a true real time measurement that is generated continuously during the installation of a helical pile or tieback. The Intelli-Tork (*Figure 1.86* and *Figure 1.87*) measures the torque applied between two flanges and transmits the torque reading to a hand-held unit for display and logging.

Figure 1.86 Electronic torque transducer

Figure 1.87 (Top) Torque transducer providing direct reading of torque for helical pile project at Reagan National Airport (Bottom) Real-time installation data being logged on an iPhone

A built in torque sensor within the housing of the flanged instrument transfers data via Bluetooth wireless technology to the Personal Digital Assistant (PDA) system or via a wireless network signal which allows multiple smart devices in the vicinity to receive the information. The devices and software provide a remote visual indication of the torque during the installation. Software provided with the PDA or the free app on smart devices have the ability to log the torque, depth and installation angle. Torque transducers can be re-calibrated as needed to ensure accuracy. In turn, a properly calibrated torque transducer can be used to calibrate analog gauge systems relative to differential pressure.

© 2024 Supportworks®
All Rights Reserved

1.13.3 Installation Guidelines

1.13.3.1 New Construction Helical Piles

Installing the Lead Section:

1. Align the lead section with the product adaptor and install the temporary hitch pins, bent arm pins or bolts.
2. Position the installation equipment and pile directly over the marked location.
3. Apply a small amount of crowd to seat the pile shaft tip into the soil.
4. Use a level or digital gauge to plumb or set the installation angle (batter) of the pile shaft.
5. Advance the pile in a continuous even manner, making periodic adjustments to maintain alignment throughout the installation. Record torque as required by project specifications or as dictated by changing soil conditions. Although the final installation torque is arguably the most critical, it is good practice to record pressure or torque during the entire installation. This allows for development of a soil strength profile relative with depth. The interval of readings is often dictated by the soil variability, i.e., more readings should be taken in heterogeneous soils and fewer readings are required in uniform, homogeneous soils. At a minimum, record torque for every lead section and extension.
6. Terminate installation of the lead section before the product adaptor penetrates the soil.
7. Remove the hitch pins, bent arm pins or bolts and carefully disconnect and raise the drive head.

Installing Extension Sections:

1. Place the first extension on top of the buried lead. Align the coupler bolt holes with the bolt holes of the lead section. Use a spud wrench if necessary to align the bolt holes.
2. Install the coupler bolts taking care not to damage threads. Tighten nuts to a snug-tight condition (*Figure 1.88*).
3. Align the drive head and product adaptor over the extension shaft to allow for insertion of the hitch pins, bent arm pins or bolts.
4. Advance the extension and any additional extensions following the alignment adjustment and coupling procedures described above.

Figure 1.88 Install coupler bolts

© 2024 Supportworks®
All Rights Reserved

Termination of Installation:

1. Over the final 3 to 5 feet of installation, assuming depth and minimum torque requirements are being met, reduce the rotational speed to approximately 10 rpm while providing proper alignment and crowd. **Refer to the Model Specifications for Helical Pile Foundations located on the Foundation Supportworks commercial website (*www.OnStableGround.com*) for termination criteria when the minimum overall length or minimum torsional resistance is not met.**

2. Remove the installation equipment from the pile, establish the top of pile elevation and cut pile shaft to the specified elevation (if necessary).

3. Install new construction bracket as specified (*Figure 1.89*). For compression applications, the new construction bracket could theoretically be set on top of the pile without bolting or welding. However, it is good practice to provide positive attachment of the bracket to the top of the pile to prevent the bracket from being lifted off the pile during concrete placement. Tack welds, a single bolt, or use of compression-only plate bracket assemblies are generally adequate for this purpose. Where the top of pile has been cut to achieve design elevation and tension loads will be applied, bolt holes should be drilled using drills and drill fixtures as recommended by Foundation Supportworks engineers to maintain bolt hole size, location and spacing tolerances.

Figure 1.89 Install new construction bracket

4. Complete field installation logs.

Should field conditions present unanticipated obstacles that require relocating of piles or tiebacks, consult the engineer of record for approval before proceeding.

© 2024 Supportworks®
All Rights Reserved

Excavation:

1. Hand or machine-excavate to expose the bottom of the footing. Individual holes should be approximately 3 feet square while a continuous trench excavation should extend at least 3 feet away from the structure.

2. The depth of excavation should locally extend 13 inches below bottom of footing and 9 inches back under bottom of footing where brackets will be placed (*Figure 1.90*).

   Follow OSHA Trench Safety Procedures. Failure to follow trench safety procedures could result in serious injury or death.

Figure 1.90 Excavation at bracket

Preparation of Footing:

1. Notch spread footings 16 to 22 inches wide (depending upon width of retrofit bracket) and approximately flush with the face of the foundation wall (*Figure 1.91*). Thick column footings or trench footings often do not require notching of the concrete, but should still be prepared so the face of the footing has full contact with the back, vertical plate of the bracket.

2. Clean and prepare bottom of footing to allow full contact and seating of the bracket.

Figure 1.91 Footing preparation

© 2024 Supportworks®
All Rights Reserved

Installation of Helical Pier:

1. Attach lead section to drive head and product adaptor.

2. Place the lead section's first blade under the footing and the shaft of the lead 1½ inches away from bottom edge of footing (*Figure 1.92*). This will allow alignment of the lead to the required angle of inclination specific for the bracket system used. As additional plates on the lead section advance down the face of the footing and pass the bottom of the footing, forward crowd will be required to realign the shaft to the appropriate inclination. In the case of a vertical pile installation, a pilot hole is required to set all plates of the lead below the bottom of the footing before advancement of the pile. The pile shaft is still set 1½ inches from the face of the footing.

3. Advance the lead section and extensions to the design depth and minimum torque requirements.

Figure 1.92 Alignment of lead

4. Record the differential pressure or torque readings at appropriate depth intervals. Although the final installation torque is arguably the most critical, it is good practice to record differential pressure or torque during the entire installation. This allows for development of a relative soil strength profile with depth. The interval of readings is often dictated by the soil variability, i.e., more readings should be taken in heterogeneous soils and fewer readings are required in uniform, homogeneous soils. At a minimum, record differential pressure or torque for every lead section and extension.

5. If necessary, cut the last extension shaft to an elevation about 13 inches above bottom of footing.

6. Ideally, the last coupler on the helical pile shall be at least 23 inches below the bottom of the footing to allow installation of the 30-inch external sleeve.

© 2024 Supportworks®
All Rights Reserved

Installation of Underpinning/Retrofit Bracket:

1. Place the external sleeve through the bracket.

2. Lower the bracket and external sleeve assembly over the pier shaft with the bracket bearing plate facing away from the footing (*Figure 1.93*).

3. Rotate the bracket body 180 degrees toward the footing.

4. Raise the bracket to the footing and hold the bracket in place while attaching the thread rods and cap plate. A bracket RAYser™ is a great tool to hold the bracket in place during this operation (*Figure 1.94*).

5. Tap the external sleeve down until the top flange or flared end rests on the bracket.

6. Install the cap plate and all thread rods (or coil rods) and tighten the nuts to snug the bracket to the bottom of the footing (*Figure 1.95*).

7. Remove the bracket RAYser™, backfill and compact soil up to the bottom of the bracket.

Figure 1.93 Lower assembly over pile shaft

Figure 1.94 Bracket RAYser™

Figure 1.95 Install cap plate and rods

© 2024 Supportworks®
All Rights Reserved

Load transfer and Lift:

1. Set the lift cylinders and apply load to project specifications. Discontinue if structure begins to lift prior to achieving the service load. Alternatively, load can be increased until the structure lifts and the desired elevation is met (*Figure 1.96*).

2. Lock off and transfer the load to the piers by tightening the nuts down to cap plate.

3. Remove the lifting hardware and hydraulics.

4. Complete the field installation logs.

5. Establish benchmarks (if required).

Figure 1.96 Set hydraulic lift cylinders

Backfill and cleanup:

1. Backfill holes or trenches with the excavated, on-site material or imported soil.

2. Follow proper backfill/compaction procedures and tamp in maximum 6 to 12-inch lifts depending upon type and weight of compaction equipment (*Figure 1.97*).

3. When possible, establish grades to allow positive surface drainage away from the structure.

4. Clean up and haul away construction debris from the piering operation.

Figure 1.97 Backfill and compact soil

Should field conditions present unanticipated obstacles that require relocating any of the proposed piers, consult the engineer of record for approval before proceeding.

© 2024 Supportworks®
All Rights Reserved

Helical tiebacks can be installed using either machine-mounted or hand-held drive heads. Basic installation procedures consist of the following:

1. Attach the lead section to the product adaptor and insert the hitch pin(s), bent arm pin(s) or bolt(s).
2. Elevate the lead section along with the drive head assembly and place the tip of the tieback at the marked location.
3. Establish the proper angle of inclination and align the lead section per the design specifications.
4. Provide minimal crowd to seat the lead shaft tip.
5. Install the lead section while maintaining the proper installation angle.
6. Connect the extension section to the lead and snug tighten the bolted connection(s) at coupler.
7. Continue adding extensions until embedment length and minimal torque requirements are met. **Refer to the Model Specifications for Helical Anchor Foundations located at the Foundation Supportworks commercial website (*www.OnStableGround.com*) for termination criteria when the minimum overall length or minimum torsional resistance is not met.**
8. Disconnect the installation equipment and install a threaded transition assembly or other termination device on the end of the extension.
9. Install threaded rod into the transition so the threads are fully engaged.
10. Place a wall plate, bracket or waler system over the threaded rod. Place a nut and beveled washer on the threaded rod and tighten to the bearing plate.
11. Pretension and lock off the tieback as recommended by the engineer of record (see *Section 1.8.1* for additional information related to pretensioning tiebacks). Some systems may allow the lock-off nut to be tightened to a predetermined torque which correlates to an axial tensile force. For larger projects, a calibrated hydraulic cylinder may be used to pretension the tieback to the required lock-off load.
12. Remove equipment and cut threaded rod.

© 2024 Supportworks®
All Rights Reserved

Staging and Grout Mixing:

1. Helicast pile grout may consist of neat cement (Portland cement and water) or a specialty micropile grout with additives to improve workability and performance. Desired mixtures produce a grout that is flowable, does not segregate, and exhibits non-shrink to slightly expansive behavior (refer to *Section 1.10.1.5* for additional information related to staging and grout mixing).

2. Stage the grout components (cement, admixtures and water) and helical pile sections near the work area and shelter them from direct sun and wind when extreme heat conditions exist (*Figure 1.98*). Elevated grout mixture and steel temperatures may decrease the pot life of the grout (see *Section 1.10.1.5* for additional information). In cold weather, care should be taken to prevent grout from freezing during each stage of mixing, placing and curing.

Figure 1.98 Grout mixing station near work area

3. Use the grout mix as specified for the project. Follow the specialty grout manufacturer's recommendations regarding mix proportions, water-to-cement ratio, specific gravity and proper mixing equipment (*Figure 1.99*). The use of a graduated mixing container for water measurement is recommended.

Figure 1.99 Grout mixing

Exposure to fine-grained, cementitious products may pose health hazards from inhalation or direct contact with the skin or eyes. The use of appropriate personal protective equipment (PPE) is recommended. Consult the grout manufacturer's specific Safety Data Sheets (SDS) and PPE requirements for proper handling of the product.

4. Periodically record the grout temperature and measure the specific gravity with a mud balance (*Figure 1.100*). Specific gravity measurements should be used during production as a quality control check to verify the proper ratios of the Portland cement, admixtures and water, and may also be used to correlate to 28-day grout strengths. Grout temperatures should generally be in the range of 60° to 80°F from mixing through curing, but may be higher or lower in extreme conditions if proper hot or cold weather grouting procedures are followed.

Figure 1.100 Measuring the specific gravity of the grout with a mud balance

© 2024 Supportworks®
All Rights Reserved

Installing the Lead Section:

1. Align the lead section with the product adaptor and install the temporary hitch pin(s), bent arm pin(s) or bolt(s).

2. Position the installation equipment and pile directly over the marked location.

3. Apply a small amount of crowd to seat the pile shaft tip into the soil.

4. Use a level or digital gauge to plumb or set the installation angle (batter) of the pile shaft.

5. Advance the pile in a continuous even manner, making periodic adjustments to maintain alignment throughout the installation. Record torque as required by project specifications or as dictated by changing soil conditions. Although the final installation torque is arguably the most critical, it is good practice to record pressure or torque during the entire installation. This allows for development of a soil strength profile relative with depth. The interval of readings is often dictated by the soil variability, i.e., more readings should be taken in heterogeneous soils and fewer readings are required in uniform, homogeneous soils. At a minimum, record torque for every lead section and extension.

6. Terminate the installation when the top of the lead section is approximately 12 to 18 inches above the ground surface, remove the hitch pin(s), bent arm pin(s) or bolt(s) and carefully disconnect and raise the drive head.

7. A displacement plate retainer must be added near the top of the lead section to keep the lead soil displacement plate from sliding down the shaft before it is advanced further into the soil. A quick and cost-effective method is to wrap a few layers of duct tape around the pile shaft a few inches below the bolt hole(s) (*Figure 1.101*).

Figure 1.101 Applying duct tape to the lead section

© 2024 Supportworks®
All Rights Reserved

Setting the Grout Reservoir:

1. The grout reservoir may consist of a large bucket (5 gallon) with the bottom removed, sonotube section or a large diameter pipe section with an approximate height of 18 to 24 inches. A steel or plastic pipe casing several feet long may also be considered when wet, very loose or very soft soils exist near the surface. The pipe casing would be considered when there is concern of caving soils just below the surface and mixing of the soils with the grout. Pipe casing grout reservoirs may be temporary or permanent depending on soil and groundwater conditions. Please consult the Foundation Supportworks Engineering Department for recommendations for installing a pipe casing grout reservoir.

2. Excavate a hole around the lead section shaft that is slightly larger than the reservoir diameter and about one-third to one-half the depth of the reservoir. Take care to center the reservoir body with the pile shaft. Remove any loose soil at the bottom of the excavation and set the reservoir (*Figure 1.102* and *Figure 1.103*). Pack soil around the outside of the reservoir to stabilize it for the remainder of the installation.

3. Fill the reservoir with grout (*Figure 1.104*). Monitor grout volume usage throughout installation of each pile. This can be accomplished by either keeping track of the number of buckets used with the same approximate volume at each pour, or by measuring the grout drop within a calibrated reservoir.

Figure 1.102 Excavating for the reservoir and removing loose soil

Figure 1.103 Setting the reservoir

Figure 1.104 Pouring grout into the reservoir

© 2024 Supportworks®
All Rights Reserved

Installing the Lead Displacement Plate and First Extension:

1. Place the lead soil displacement plate (*Figure 1.105*) over the top of the lead section, paddles down, to rest on the duct tape or other plate retainer device (*Figure 1.106*).

2. Place a small amount of "thick" quick-set grout on the top of the lead section to fill the gap inside the coupler. This is referred to as "buttering" the connection (*Figure 1.107*).

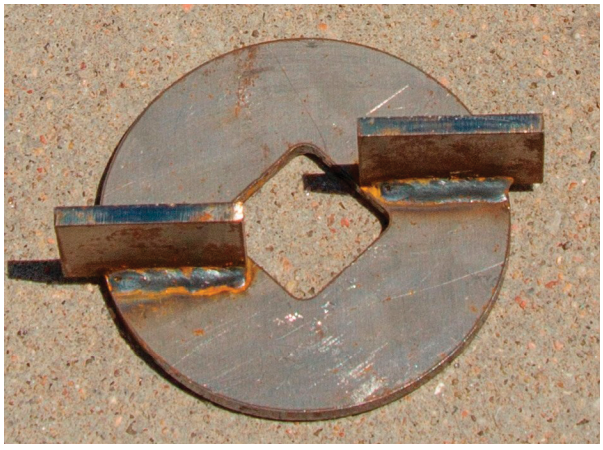

Figure 1.105 Lead displacement plate

Figure 1.106 Lead displacement plate on the lead section

Figure 1.107 Buttering the top of pile at coupler

3. Place the first extension on top of the lead section (*Figure 1.108*). Install coupler bolt(s) taking care not to damage the threads. Tighten the nuts to a snug-tight condition.

4. Align the drive head and product adaptor over the extension shaft and advance the pile.

5. During the first few rotations, wrap duct tape around the extension just below the product adaptor. This will again serve to retain the next soil displacement plate.

6. Advance the extension in a similar manner as the lead section, while monitoring the grout level in the reservoir. The grout flows down along the pile shaft by gravity; therefore, it is important to keep an adequate level of grout in the reservoir. Refill the reservoir as needed (*Figure 1.109*).

Figure 1.108 Couple the first extension to the lead

Figure 1.109 Maintaining an adequate level of grout within the reservoir

© 2024 Supportworks®
All Rights Reserved

Installing Additional Extension Sections:

1. Terminate the installation of an extension section when the bolt holes are just above the top of the reservoir.

2. Place the extension displacement plate (*Figure 1.110*) on the extension (*Figure 1.111*).

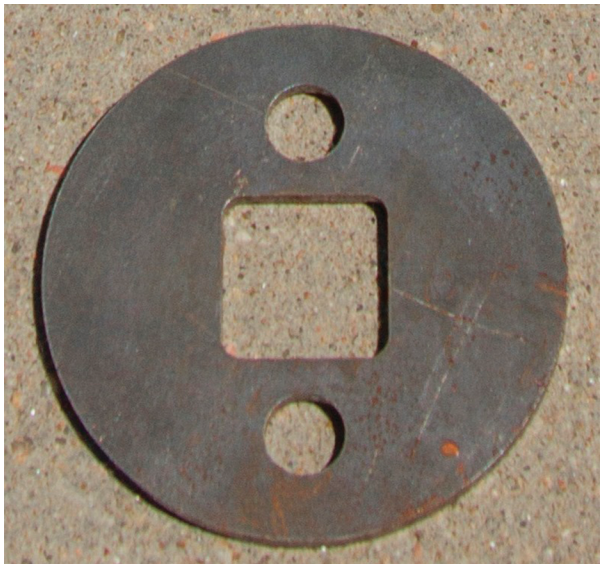

Figure 1.110 Extension displacement plate

Figure 1.111 Extension displacement plate on the extension shaft

3. Butter the top of the pile with quick-set grout (*Figure 1.112*) and add another extension. Follow the same installation steps with each successive extension (*Figure 1.113*).

Figure 1.112 Buttering the top of the extension

Figure 1.113 Placing an additional extension

© 2024 Supportworks®
All Rights Reserved

Termination of Installation:

1. Over the final 3 to 5 feet of installation, assuming depth and minimum torque requirements are achieved, reduce rotational speed to roughly 10 rpm. Provide proper alignment and crowd. **Refer to the Model Specifications for Helicast Pile Foundations located at the Foundation Supportworks commercial website (*www.OnStableGround.com*) for termination criteria when the minimum overall length or minimum torsional resistance is not met.**

2. Disconnect the installation equipment from the pile, establish the top of pile elevation and cut the pile shaft to the specified elevation (if necessary). If cutting of the pile top is required, it should be cut while grout is still fluid or after allowing grout to cure fully to avoid damage of the grout column at the grout/shaft interface. Remove the grout reservoir body.

3. Install a new construction bracket or other termination device as specified. For compression applications, a new construction bracket could technically be set on top of the pile without bolting or welding. However, it is good practice to provide a positive attachment of the bracket to prevent it from being lifted off the pile during concrete placement. Tack welds or a single bolt are generally adequate for this purpose. Where the top of the pile has been cut to achieve design elevation and tension loads will be applied, bolt holes should be drilled using drills and drill fixtures as recommended by Foundation Supportworks engineers to maintain bolt-hole diameter, location, and spacing tolerances.

4. Complete the field installation logs with the information required for a Helicast pile installation, including but not limited to the estimated grout volume used for each pile, measurements of specific gravity and grout temperature, and the time, date and batch information for any third-party grout sampling.

Should field conditions present unanticipated obstacles that require relocating of piles, consult the engineer of record for approval before proceeding.

Displacement plates that receive steel or PVC casing may be required. Please consult the Foundation Supportworks Engineering Department for recommendations and installation procedures for cased Helicast piles.

© 2024 Supportworks®
All Rights Reserved

CHAPTER 1

APPENDIX 1A

Helical Foundation Systems

Helical Pile Capacities Summary 95
HA150 96
HA175 100
HP237 105
HP287 111
HP288 123
HP350 134
HP450 143
HP662 148
HP700 151
Helix Plate Capacities 154

HELICAL PILE CAPACITIES SUMMARY

		Installation Torque		Maximum Soil Capacity[7]		Shaft Max Allowable Capacity[4] P_n/Ω					
						Compression[3]			Tension		
		Correlation Factor	Max Rated Torque	Ultimate	Allowable	Plain	Plain Corroded[1]	Galvanized Corroded[1,2]	Plain	Plain Corroded[1]	Galvanized Corroded[1,2]
		K_t (ft^{-1})	T (ft-lb)	Q_u (kips)	Q_a (kips)	(kips)	(kips)	(kips)	(kips)	(kips)	(kips)
Shaft	**HA150**	10[5]	6,500	65.0	32.5	29.8[8]	27.0[8]	27.1[8]	29.8	27.0	27.1
	HA175	10[5]	10,000	100.0	50.0	59.6[8]	54.1[8]	54.2[8]	59.6	54.1	54.2
	HP237	10[6]	2,500	25.0	12.5	35.1	26.3	32.6	19.3	13.6	16.9
	HP287	9[5]	5,600	50.4	25.2	55.8	45.2	52.9	30.6	23.6	27.6
	HP288	9[5]	7,900	71.1	35.5	74.0	63.6	71.1	41.6	34.1	38.1
	HP350	7[5]	17,500	122.5	61.3	118.5	105.0	114.8	73.0	62.8	69.1
	HP450	5.5[6]	22,000	121.0	60.5	123.3	109.1	119.3	61.1	52.6	58.7
	HP662[9]	N/A	35,000	N/A	N/A	182.6	157.4	175.6	98.7	83.3	93.0
	HP700[9]	N/A	50,000	N/A	N/A	246.9	220.5	239.6	135.0	118.8	130.5

(1) Corroded capacities include a 50-year scheduled sacrificial loss in thickness per ICC-ES AC358.

(2) Hot-dip galvanized coating in accordance with ASTM A123. Coatings on fasteners vary by product line. See individual shaft specification sheets for more details.

(3) Allowable mechanical compression capacities consider continuous lateral soil confinement in soils with SPT N-values ≥ 4. Piles with exposed unbraced lengths or piles placed in weaker or fluid soils should be evaluated on a case-by-case basis by the project engineer.

(4) Listed mechanical capacities are for the shaft and coupled connections only. System capacity should also not exceed the installed allowable torque-correlated soil capacity or the allowable capacity of the respective bracket (see additional bracket tables).

(5) Default K_t factors are consistent with those listed in ICC-ES AC358. These values are generally conservative. Site-specific K_t factors can be determined for a given project with full-scale load testing.

(6) Calculated K_t factors are in accordance with ICC-ES AC358. These values are generally conservative. Site-specific K_t factors can be determined for a given project with full-scale load testing.

(7) Maximum ultimate soil capacity is the product of the torque correlation factor and the shaft maximum torque rating per the equation $Q_u = K_t \times T$. The maximum allowable soil capacity is obtained by dividing the maximum ultimate soil capacity by a specified factor of safety. Although a factor of safety of 2.0 is commonly used, a higher or lower factor of safety may be considered at the discretion of the helical pile designer or as dictated by local code requirements. System capacity should also not exceed the mechanical capacity of the shaft or those listed in the respective bracket capacity tables.

(8) Square shaft piles may be considered for compression applications in soil profiles that offer sufficient continuous lateral support; e.g., in soils with SPT N-values ≥ 10. In profiles or conditions that limit pile stability, buckling analyses should be considered by the project engineer, taking into account discontinuities and potential eccentricities created by the couplers.

(9) Larger diameter product lines are fully customized on a project specific basis. All values provided for these products are for general informational purposes only. Actual capacities (including any related to installation torque) will vary based on several project specific variables such as coupler details, end termination details, site specific soil profiles, and even material availability. Full scale load tests are recommended to confirm soil capacities determined in the design phase of the project.

04/10/23

© 2024 Supportworks®
All Rights Reserved

HA150

© 2024 Supportworks®
All Rights Reserved

HA150 Shaft Specifications & Capacities

Shaft Material:
1.50" round corner square bar
ASTM A29
Yield strength = 90 ksi (min)
Tensile strength = 115 ksi (min)

Helix Plates:
ASTM A572 Grade 50
⅜" thick (standard)
½" thick (available)
Helix plate geometry conforming to ICC-ES AC358

Shaft Coupling Hardware:
(1) - Ø¾" Grade 8 bolt with nut
Mechanically galvanized per ASTM B695

Surface Finish of Shaft Segments:
Available plain or hot-dip galvanized(2)

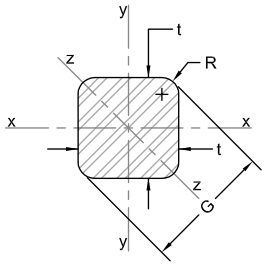

	Plain	Plain Corroded(1)	Galvanized Corroded(1,2)
t (in)	1.500	1.464	1.490
G (in)	1.914	1.878	1.904
R (in)	0.250	0.232	0.245
A (in²)	2.20	2.10	2.17
I_x, I_y (in⁴)	0.40	0.36	0.39
I_z (in⁴)	0.40	0.36	0.39
S_x, S_y (in³)	0.53	0.49	0.52
S_z (in³)	0.41	0.38	0.41
Z_x, Z_y (in³)	0.81	0.75	0.79
Z_z (in³)	0.77	0.72	0.75
r_x, r_y (in)	0.42	0.42	0.42
r_z (in)	0.42	0.42	0.42
Shaft Max Allowable Compression Capacity(3,4) P_n/Ω (kips)	**29.8**	**27.0**	**27.1**
Shaft Max Allowable Tension Capacity(4) P_n/Ω (kips)	**29.8**	**27.0**	**27.1**

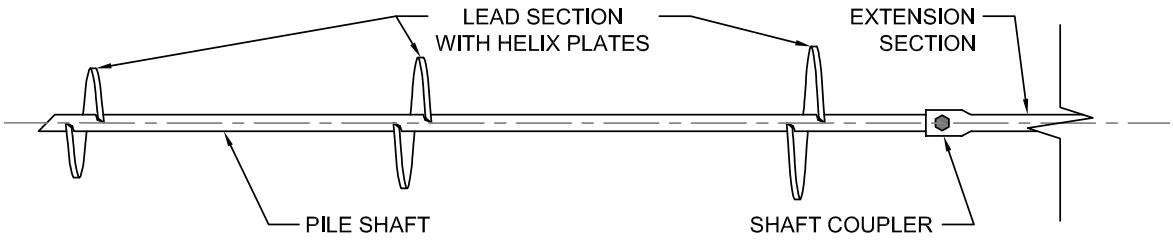

Default Torque Correlation Factor(5) K_t = 10 (ft^{-1})	**Maximum Ultimate Soil Capacity(6) Q_u = 65.0 (kips)**
Maximum Installation Torque T = 6,500 (ft-lb)	**Maximum Allowable Soil Capacity(6) Q_a = 32.5 (kips) FOS = 2.0**

(1) Corroded properties and capacities include a 50-year scheduled sacrificial loss in thickness per ICC-ES AC358.

(2) Hot-dip galvanized coating in accordance with ASTM A123.

(3) Square shaft piles may be considered for compression applications in soil profiles that offer sufficient continuous lateral support; e.g., in soils with SPT N-values ≥ 10. In profiles or conditions that limit pile stability, buckling analyses should be considered by the project engineer, taking into account discontinuities and potential eccentricities created by the couplers.

(4) Listed mechanical capacities are for the shaft and coupled connections only. System capacity should also not exceed the installed allowable torque-correlated soil capacity or the allowable capacity of the respective bracket (see additional bracket tables).

(5) Default K_t factor is consistent with that listed in ICC-ES AC358. This value is generally conservative. Site-specific K_t factors can be determined for a given project with full-scale load testing.

(6) Soil capacities listed are at maximum installation torque. Ultimate soil capacity is based on the equation $Q_u = K_t \times T$. Allowable soil capacity is obtained by dividing the ultimate capacity by an appropriate factor of safety ($Q_a = Q_u$ / FOS). Although a factor of safety of 2.0 is commonly used, a higher or lower factor of safety may be considered at the discretion of the helical pile designer or as dictated by local code requirements. System capacity should also not exceed the mechanical capacity of the shaft or those listed in the respective bracket capacity tables.

© 2024 Supportworks®
All Rights Reserved

HA150NCB Bracket Specifications & Capacities when used with the HA150 Helical Pile System

Bracket Sleeve Material:
Ø2.750" x 0.313" wall
ASTM A513 Type 5 Grade 1026
Yield strength = 70 ksi (min)
Tensile strength = 80 ksi (min)

Cap Plate Material:
¾" x 6.00" square
ASTM A36

Bracket Hardware:
(1) - Ø¾" Grade 8 bolt with nut
Mechanically galvanized per ASTM B695

Bracket Finish:
Available plain or hot-dip galvanized(2)

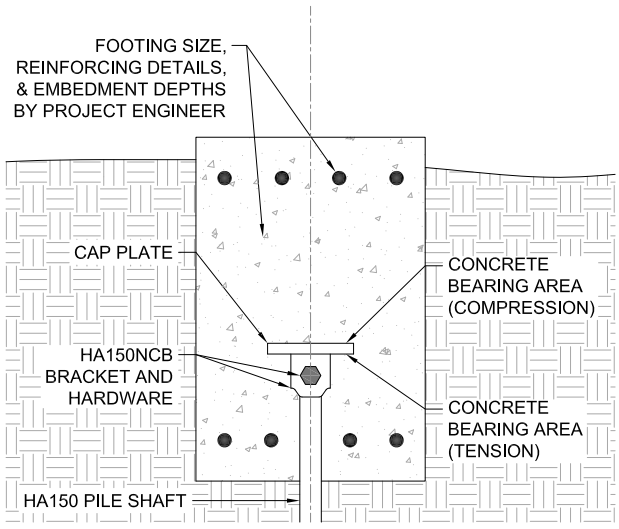

Concrete Bearing Area(6) (Compression) = 36.0 in²
Concrete Bearing Area(6) (Tension) = 30.1 in²

		Allowable Bracket Capacity(4) R_n/Ω			
		Compression(3) (kips)	Concrete Bearing(6) (ksi)	Tension (kips)	Concrete Bearing(6) (ksi)
1 Bolt	Plain	29.6	0.82	29.6	0.98
	Plain Corroded(1)	24.9	0.70	24.9	0.84
	Galvanized Corroded(1,2)	27.1	0.76	27.1	0.91
0 Bolts(5)	Plain	29.8	0.83	0	0
	Plain Corroded(1)	27.0	0.76	0	0
	Galvanized Corroded(1,2)	27.1	0.76	0	0

(1) Corroded capacities include a 50-year scheduled sacrificial loss in thickness per ICC-ES AC358.

(2) Hot-dip galvanized coating in accordance with ASTM A123.

(3) Square shaft piles may be considered for compression applications in soil profiles that offer sufficient continuous lateral support; e.g., in soils with SPT N-values ≥ 10. In profiles or conditions that limit pile stability, buckling analyses should be considered by the project engineer, taking into account discontinuities and potential eccentricities created by the couplers.

(4) Listed capacities include limiting mechanical capacities of the shaft when the shaft and bracket are combined as a system. System capacity should also not exceed the installed allowable torque-correlated soil capacity (See Shaft Specifications & Capacities).

(5) Applications utilizing no bolts should either be tack welded or utilize some other mechanism to immobilize the bracket and maintain firm contact between the cap plate and pile shaft throughout construction and concrete placement.

(6) Concrete bearing values provided are the uniform bearing stresses required to achieve the full corresponding bracket capacity. Allowable concrete bearing is a function of several project specific variables including depth of embedment, edge distance, and concrete compressive strength (f'_c). When allowable concrete bearing stresses are lower than these values, corresponding bracket capacities can be obtained by multiplying the actual allowable concrete bearing stress by the respective bearing areas provided, but should not exceed the capacities listed in this table. Other concrete design checks including shear, bending, and punching of the supported structure are also project specific and shall be the responsibility of the project engineer.

© 2024 Supportworks®
All Rights Reserved

HA150 Helix Plate Net Bearing Areas

H-Style Plates

Plate Diameter (inches)	Area (ft^2)
6	0.18
8	0.33
10	0.53
12	0.77
14	1.05
16	1.38

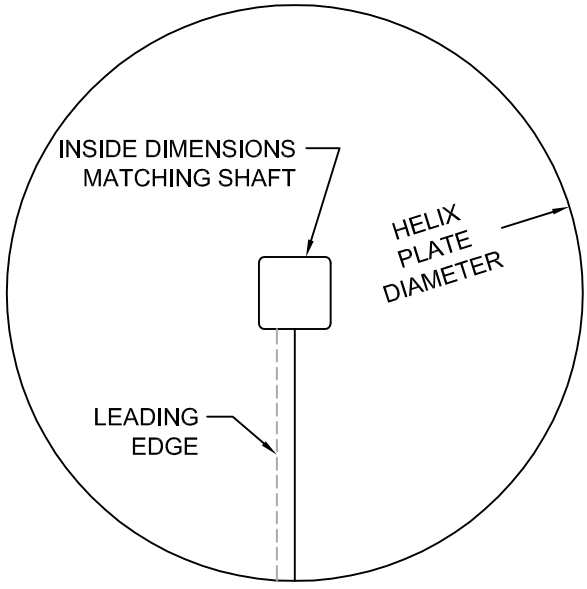

V-Style Plates[1]

Plate Diameter (inches)	Area (ft^2)
6	0.16
8	0.30
10	0.47
12	0.68
14	0.92
16	1.20

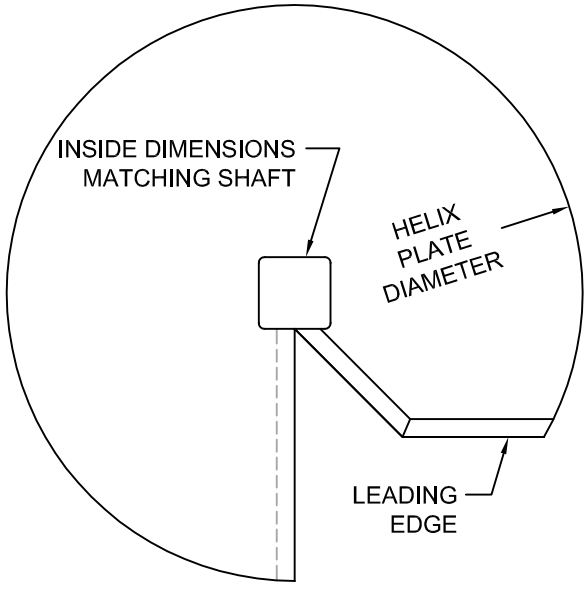

(1) V-Style plates feature a special cut on the leading edge (or cutting edge). This edge is cut at two successive 45° angles to roughly simulate a spiral. This is in addition to the 45° bevel on the leading edge which is a standard feature for helix plates of both styles. V-Style plates are appropriate for use in applications where rocky or rubble-filled soils are anticipated, or where very dense layers need to be penetrated.

© 2024 Supportworks®
All Rights Reserved

HA175

© 2024 Supportworks®
All Rights Reserved

HA175 Shaft Specifications & Capacities

Shaft Material:
1.75" round corner square bar
ASTM A29
Yield strength = 90 ksi (min)
Tensile strength = 115 ksi (min)

Helix Plates:
ASTM A572 Grade 50
⅜" thick (standard)
½" thick (available)
Helix plate geometry conforming to ICC-ES AC358

Shaft Coupling Hardware:
(2) - Ø¾" Grade 8 bolts with nuts
Mechanically galvanized per ASTM B695

Surface Finish of Shaft Segments:
Available plain or hot-dip galvanized[2]

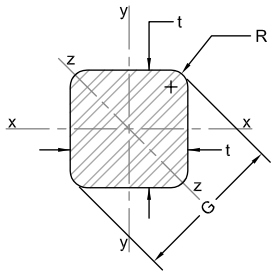

	Plain	Plain Corroded[1]	Galvanized Corroded[1,2]
t (in)	1.750	1.714	1.740
G (in)	2.268	2.232	2.258
R (in)	0.250	0.232	0.245
A (in²)	3.01	2.89	2.98
I_x, I_y (in⁴)	0.75	0.69	0.73
I_z (in⁴)	0.75	0.69	0.73
S_x, S_y (in³)	0.85	0.80	0.84
S_z (in³)	0.66	0.62	0.65
Z_x, Z_y (in³)	1.30	1.22	1.27
Z_z (in³)	1.23	1.16	1.21
r_x, r_y (in)	0.50	0.49	0.50
r_z (in)	0.50	0.49	0.50
Shaft Max Allowable Compression Capacity[3,4] P_n/Ω (kips)	**59.6**	**54.1**	**54.2**
Shaft Max Allowable Tension Capacity[4] P_n/Ω (kips)	**59.6**	**54.1**	**54.2**

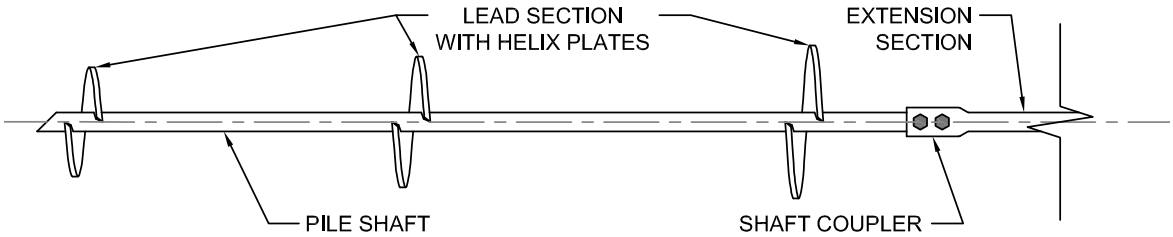

Default Torque Correlation Factor[5] K_t = 10 (ft^{-1})	**Maximum Ultimate Soil Capacity[6] Q_u = 100.0 (kips)**
Maximum Installation Torque T = 10,000 (ft-lb)	**Maximum Allowable Soil Capacity[6] Q_a = 50.0 (kips) FOS = 2.0**

(1) Corroded properties and capacities include a 50-year scheduled sacrificial loss in thickness per ICC-ES AC358.

(2) Hot-dip galvanized coating in accordance with ASTM A123.

(3) Square shaft piles may be considered for compression applications in soil profiles that offer sufficient continuous lateral support; e.g., in soils with SPT N-values ≥ 10. In profiles or conditions that limit pile stability, buckling analyses should be considered by the project engineer, taking into account discontinuities and potential eccentricities created by the couplers.

(4) Listed mechanical capacities are for the shaft and coupled connections only. System capacity should also not exceed the installed allowable torque-correlated soil capacity or the allowable capacity of the respective bracket (see additional bracket tables).

(5) Default K_t factor is consistent with that listed in ICC-ES AC358. This value is generally conservative. Site-specific K_t factors can be determined for a given project with full-scale load testing.

(6) Soil capacities listed are at maximum installation torque. Ultimate soil capacity is based on the equation $Q_u = K_t \times T$. Allowable soil capacity is obtained by dividing the ultimate capacity by an appropriate factor of safety ($Q_a = Q_u$ / FOS). Although a factor of safety of 2.0 is commonly used, a higher or lower factor of safety may be considered at the discretion of the helical pile designer or as dictated by local code requirements. System capacity should also not exceed the mechanical capacity of the shaft or those listed in the respective bracket capacity tables.

© 2024 Supportworks®
All Rights Reserved

HA175NCB Bracket Specifications & Capacities when used with the HA175 Helical Pile System

Bracket Sleeve Material:
Ø3.000" x 0.313" wall
ASTM A513 Type 5 Grade 1026
Yield strength = 70 ksi (min)
Tensile strength = 80 ksi (min)

Cap Plate Material:
¾" x 6.00" square
ASTM A36

Bracket Hardware:
(2) - Ø¾" Grade 8 bolts with nuts
Mechanically galvanized per ASTM B695

Bracket Finish:
Available plain or hot-dip galvanized[2]

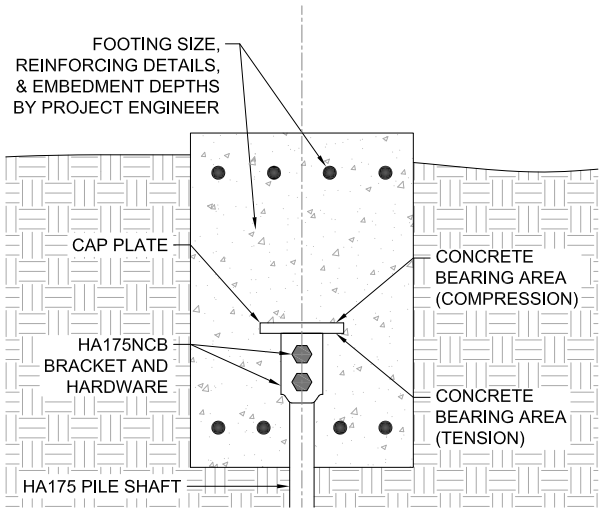

Concrete Bearing Area[6] (Compression) = 36.0 in²
Concrete Bearing Area[6] (Tension) = 28.9 in²

		Allowable Bracket Capacity[4] R_n/Ω			
		Compression[3] (kips)	Concrete Bearing[6] (ksi)	Tension (kips)	Concrete Bearing[6] (ksi)
2 Bolts	Plain	59.2	1.64	54.3	1.88
	Plain Corroded[1]	49.8	1.40	48.7	1.71
	Galvanized Corroded[1,2]	54.2	1.51	52.7	1.83
1 Bolt	Plain	29.6	0.82	29.6	1.02
	Plain Corroded[1]	24.9	0.70	24.9	0.87
	Galvanized Corroded[1,2]	27.1	0.76	27.1	0.94
0 Bolts[5]	Plain	46.5	1.29	0	0
	Plain Corroded[1]	42.4	1.19	0	0
	Galvanized Corroded[1,2]	45.4	1.26	0	0

(1) Corroded capacities include a 50-year scheduled sacrificial loss in thickness per ICC-ES AC358.

(2) Hot-dip galvanized coating in accordance with ASTM A123.

(3) Square shaft piles may be considered for compression applications in soil profiles that offer sufficient continuous lateral support; e.g., in soils with SPT N-values ≥ 10. In profiles or conditions that limit pile stability, buckling analyses should be considered by the project engineer, taking into account discontinuities and potential eccentricities created by the couplers.

(4) Listed capacities include limiting mechanical capacities of the shaft when the shaft and bracket are combined as a system. System capacity should also not exceed the installed allowable torque-correlated soil capacity (See Shaft Specifications & Capacities).

(5) Applications utilizing no bolts should either be tack welded or utilize some other mechanism to immobilize the bracket and maintain firm contact between the cap plate and pile shaft throughout construction and concrete placement.

(6) Concrete bearing values provided are the uniform bearing stresses required to achieve the full corresponding bracket capacity. Allowable concrete bearing is a function of several project specific variables including depth of embedment, edge distance, and concrete compressive strength (f'_c). When allowable concrete bearing stresses are lower than these values, corresponding bracket capacities can be obtained by multiplying the actual allowable concrete bearing stress by the respective bearing areas provided, but should not exceed the capacities listed in this table. Other concrete design checks including shear, bending, and punching of the supported structure are also project specific and shall be the responsibility of the project engineer.

© 2024 Supportworks®
All Rights Reserved

HA175NCB8 Bracket Specifications & Capacities when used with the HA175 Helical Pile System

Bracket Sleeve Material:
Ø3.000" x 0.313" wall
ASTM A513 Type 5 Grade 1026
Yield strength = 70 ksi (min)
Tensile strength = 80 ksi (min)

Cap Plate Material:
¾" x 8.00" square
ASTM A36

Bracket Hardware:
(2) - Ø¾" Grade 8 bolts with nuts
Mechanically galvanized per ASTM B695

Bracket Finish:
Available plain or hot-dip galvanized[2]

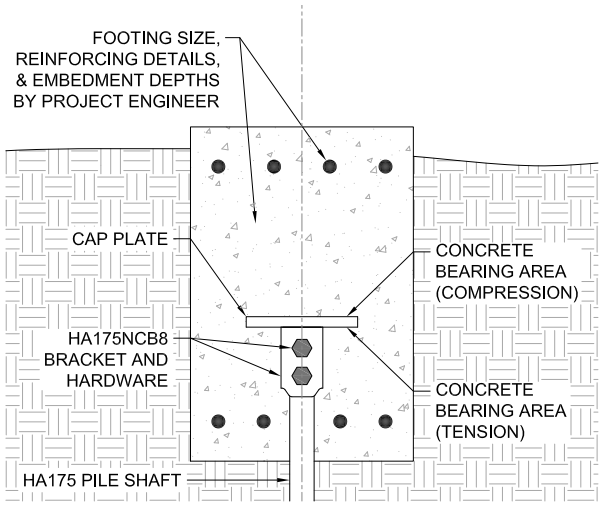

Concrete Bearing Area[6] (Compression) = 64.0 in²
Concrete Bearing Area[6] (Tension) = 56.9 in²

		Allowable Bracket Capacity[4] R_n/Ω			
		Compression[3] (kips)	Concrete Bearing[6] (ksi)	Tension (kips)	Concrete Bearing[6] (ksi)
2 Bolts	Plain	49.6	0.78	44.2	0.78
	Plain Corroded[1]	44.7	0.70	39.7	0.70
	Galvanized Corroded[1,2]	48.2	0.76	42.9	0.76
1 Bolt	Plain	29.6	0.46	29.6	0.52
	Plain Corroded[1]	24.9	0.39	24.9	0.44
	Galvanized Corroded[1,2]	27.1	0.42	27.1	0.48
0 Bolts[5]	Plain	38.8	0.61	0	0
	Plain Corroded[1]	35.2	0.56	0	0
	Galvanized Corroded[1,2]	37.8	0.59	0	0

(1) Corroded capacities include a 50-year scheduled sacrificial loss in thickness per ICC-ES AC358.

(2) Hot-dip galvanized coating in accordance with ASTM A123.

(3) Square shaft piles may be considered for compression applications in soil profiles that offer sufficient continuous lateral support; e.g., in soils with SPT N-values ≥ 10. In profiles or conditions that limit pile stability, buckling analyses should be considered by the project engineer, taking into account discontinuities and potential eccentricities created by the couplers.

(4) Listed capacities include limiting mechanical capacities of the shaft when the shaft and bracket are combined as a system. System capacity should also not exceed the installed allowable torque-correlated soil capacity (See Shaft Specifications & Capacities).

(5) Applications utilizing no bolts should either be tack welded or utilize some other mechanism to immobilize the bracket and maintain firm contact between the cap plate and pile shaft throughout construction and concrete placement.

(6) Concrete bearing values provided are the uniform bearing stresses required to achieve the full corresponding bracket capacity. Allowable concrete bearing is a function of several project specific variables including depth of embedment, edge distance, and concrete compressive strength (f'_c). When allowable concrete bearing stresses are lower than these values, corresponding bracket capacities can be obtained by multiplying the actual allowable concrete bearing stress by the respective bearing areas provided, but should not exceed the capacities listed in this table. Other concrete design checks including shear, bending, and punching of the supported structure are also project specific and shall be the responsibility of the project engineer.

© 2024 Supportworks®
All Rights Reserved

HA175 Helix Plate Net Bearing Areas

H-Style Plates

Plate Diameter (inches)	Area (ft^2)
6	0.18
8	0.33
10	0.52
12	0.76
14	1.05
16	1.38

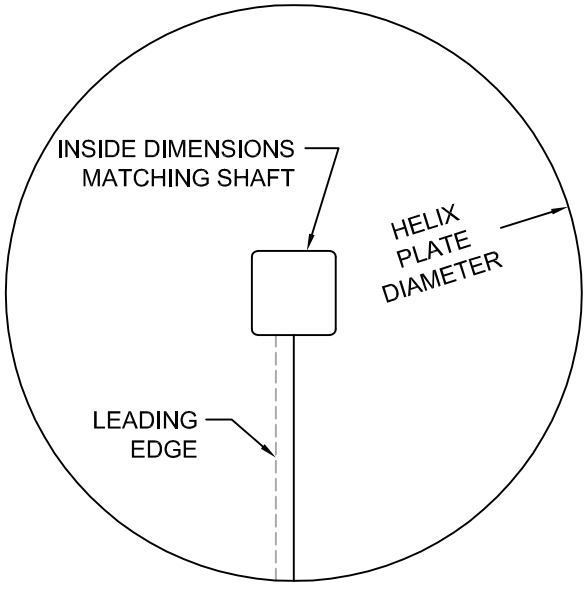

V-Style Plates(1)

Plate Diameter (inches)	Area (ft^2)
6	0.16
8	0.29
10	0.46
12	0.67
14	0.92
16	1.20

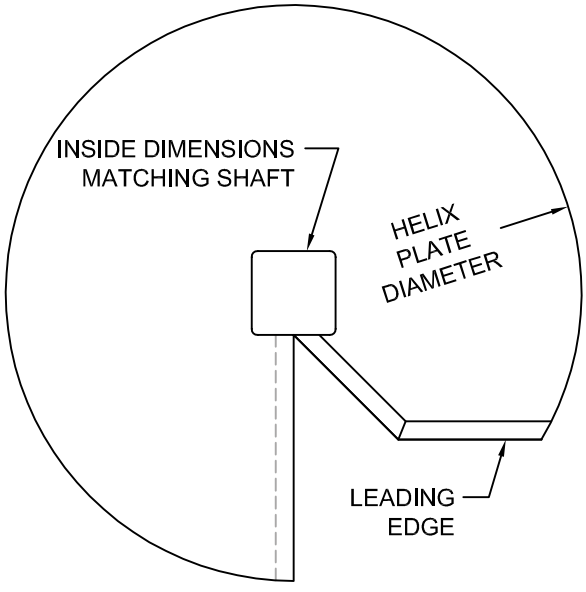

(1) V-Style plates feature a special cut on the leading edge (or cutting edge). This edge is cut at two successive 45° angles to roughly simulate a spiral. This is in addition to the 45° bevel on the leading edge which is a standard feature for helix plates of both styles. V-Style plates are appropriate for use in applications where rocky or rubble-filled soils are anticipated, or where very dense layers need to be penetrated.

© 2024 Supportworks®
All Rights Reserved

HP237

© 2024 Supportworks®
All Rights Reserved

HP237 Shaft Specifications & Capacities

Shaft Material:
Ø2.375" x 0.154" wall
ASTM A500 Grade B or C
Yield strength = 60 ksi (min)
Tensile strength = 70 ksi (min)

Shaft Coupler Material:
Ø2.750" x 0.156" wall
ASTM A513 Type 5 Grade 1026
Yield strength = 70 ksi (min)
Tensile strength = 80 ksi (min)

Helix Plates:
ASTM A572 Grade 50
5⁄16" thick (standard)
3⁄8" thick (available)
Helix plate geometry conforming to ICC-ES AC358

Shaft Coupling Hardware:
(2) - Ø5⁄8" ASTM A325 bolts with nuts
Hot-dip galvanized per ASTM A153

Surface Finish of Shaft Segments:
Available plain or hot-dip galvanized[2]

Nominal Thickness	**0.154 (in)**
Design Thickness[3]	**0.143 (in)**

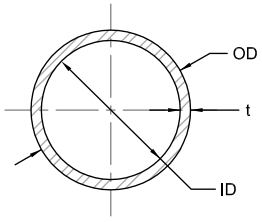

	Plain	Plain Corroded[1]	Galvanized Corroded[1,2]
OD (in)	2.375	2.339	2.365
t (in)	0.143	0.107	0.133
ID (in)	2.089	2.125	2.099
A (in²)	1.00	0.75	0.93
I (in⁴)	0.63	0.47	0.58
S (in³)	0.53	0.40	0.49
Z (in³)	0.71	0.53	0.66
r (in)	0.79	0.79	0.79
Shaft Max Allowable Compression Capacity[4,5] P_n/Ω (kips)	**35.1**	**26.3**	**32.6**
Shaft Max Allowable Tension Capacity[5] P_n/Ω (kips)	**19.3**	**13.6**	**16.9**

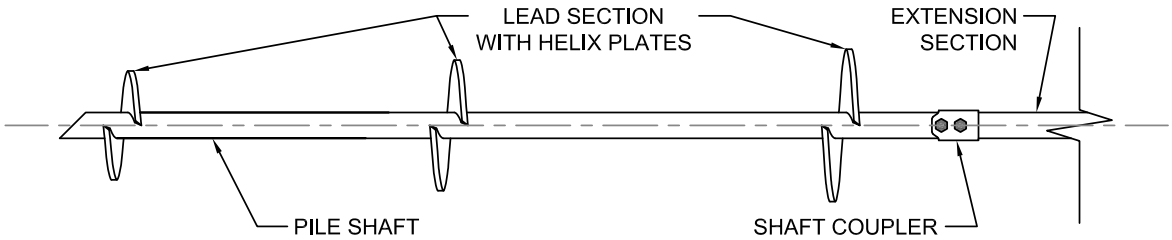

Default Torque Correlation Factor[6] K_t = 10 (ft^{-1})	**Maximum Ultimate Soil Capacity[7] Q_u = 25.0 (kips)**
Maximum Installation Torque T = 2,500 (ft-lb)	**Maximum Allowable Soil Capacity[7] Q_a = 12.5 (kips) FOS = 2.0**

(1) Corroded properties and capacities include a 50-year scheduled sacrificial loss in thickness per ICC-ES AC358.

(2) Hot-dip galvanized coating in accordance with ASTM A123.

(3) Design thickness for HSS and Pipe based on 93% of nominal thickness per AISC.

(4) Allowable mechanical compression capacities consider continuous lateral soil confinement in soils with SPT N-values ≥ 4. Piles with exposed unbraced lengths or piles placed in weaker or fluid soils should be evaluated on a case-by-case basis by the project engineer.

(5) Listed mechanical capacities are for the shaft and coupled connections only. System capacity should also not exceed the installed allowable torque-correlated soil capacity or the allowable capacity of the respective bracket (see additional bracket tables).

(6) Calculated K_t factor is in accordance with ICC-ES AC358. These values are generally conservative. Site-specific K_t factors can be determined for a given project with full-scale load testing.

(7) Soil capacities listed are at maximum installation torque. Ultimate soil capacity is based on the equation $Q_u = K_t \times T$. Allowable soil capacity is obtained by dividing the ultimate capacity by an appropriate factor of safety ($Q_a = Q_u / FOS$). Although a factor of safety of 2.0 is commonly used, a higher or lower factor of safety may be considered at the discretion of the helical pile designer or as dictated by local code requirements. System capacity should also not exceed the mechanical capacity of the shaft or those listed in the respective bracket capacity tables.

© 2024 Supportworks®
All Rights Reserved

HP238NCB Bracket Specifications & Capacities when used with the HP237 Helical Pile System

Bracket Sleeve Material:
Ø2.750" x 0.156" wall
ASTM A513 Type 5 Grade 1026
Yield strength = 70 ksi (min)
Tensile strength = 80 ksi (min)

Cap Plate Material:
½" x 4.00" square
ASTM A36

Bracket Hardware:
(2) - Ø⅝" ASTM A325 bolts with nuts
Hot-dip galvanized per ASTM A153

Bracket Finish:
Available plain or hot-dip galvanized(2)

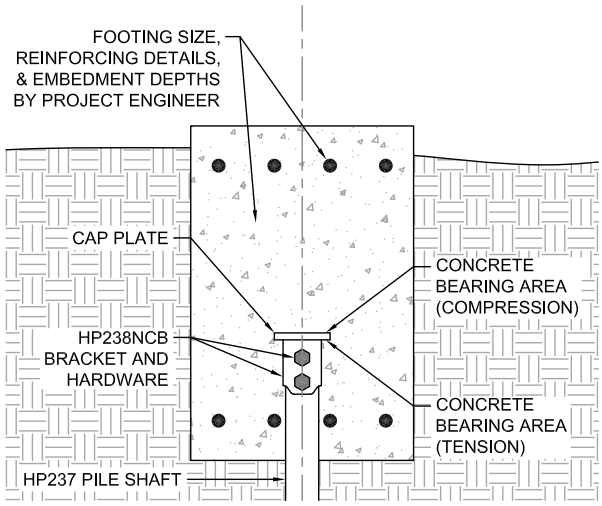

Concrete Bearing Area(6) (Compression) = 16.0 in²
Concrete Bearing Area(6) (Tension) = 10.1 in²

		Allowable Bracket Capacity(4) R_n/Ω			
		Compression(3) (kips)	Concrete Bearing(6) (ksi)	Tension (kips)	Concrete Bearing(6) (ksi)
2 Bolts	Plain	35.1	2.19	19.3	1.92
	Plain Corroded(1)	26.3	1.67	13.6	1.39
	Galvanized Corroded(1,2)	32.6	2.05	16.9	1.70
1 Bolt	Plain	35.1	2.19	7.2	0.72
	Plain Corroded(1)	26.3	1.67	5.1	0.51
	Galvanized Corroded(1,2)	32.6	2.05	6.6	0.65
0 Bolts(5)	Plain	35.1	2.19	0	0
	Plain Corroded(1)	26.3	1.67	0	0
	Galvanized Corroded(1,2)	32.6	2.05	0	0

(1) Corroded capacities include a 50-year scheduled sacrificial loss in thickness per ICC-ES AC358.

(2) Hot-dip galvanized coating in accordance with ASTM A123.

(3) Allowable compression capacities consider continuous lateral soil confinement in soils with SPT N-values ≥ 4. Piles with exposed unbraced lengths or piles placed in weaker or fluid soils should be evaluated on a case-by-case basis by the project engineer.

(4) Listed capacities include limiting mechanical capacities of the shaft when the shaft and bracket are combined as a system. System capacity should also not exceed the installed allowable torque-correlated soil capacity (See Shaft Specifications & Capacities).

(5) Applications utilizing no bolts should either be tack welded or utilize some other mechanism to immobilize the bracket and maintain firm contact between the cap plate and pile shaft throughout construction and concrete placement.

(6) Concrete bearing values provided are the uniform bearing stresses required to achieve the full corresponding bracket capacity. Allowable concrete bearing is a function of several project specific variables including depth of embedment, edge distance, and concrete compressive strength (f'_c). When allowable concrete bearing stresses are lower than these values, corresponding bracket capacities can be obtained by multiplying the actual allowable concrete bearing stress by the respective bearing areas provided, but should not exceed the capacities listed in this table. Other concrete design checks including shear, bending, and punching of the supported structure are also project specific and shall be the responsibility of the project engineer.

© 2024 Supportworks®
All Rights Reserved

HP238B2 Bracket Specifications & Capacities when used with the HP237 Helical Pile System

Bracket:
Weldment manufactured from ⅜"
ASTM A36 plate.

Integrated External Sleeve:
Ø2.875" x 0.203" wall x 20" long
ASTM A500 Grade B or C
Yield strength = 60 ksi (min)
Tensile strength = 70 ksi (min)

Cap Plate:
1" x 3.00" x 9.00" ASTM A572 Grade 50
with confining ring welded to one side

Bracket Hardware[3]:
(2) - Ø¾" x 16" long all-thread rod Grade B7
Tensile strength = 125 ksi (min)
Electrozinc plated per ASTM B633

Bracket Finish:
Available plain or hot-dip galvanized[2]

	Allowable Bracket Capacity[4,5,6,7] R_n/Ω
	(kips)
Plain	10.9
Plain Corroded[1]	8.3
Galvanized Corroded[1,2]	10.2

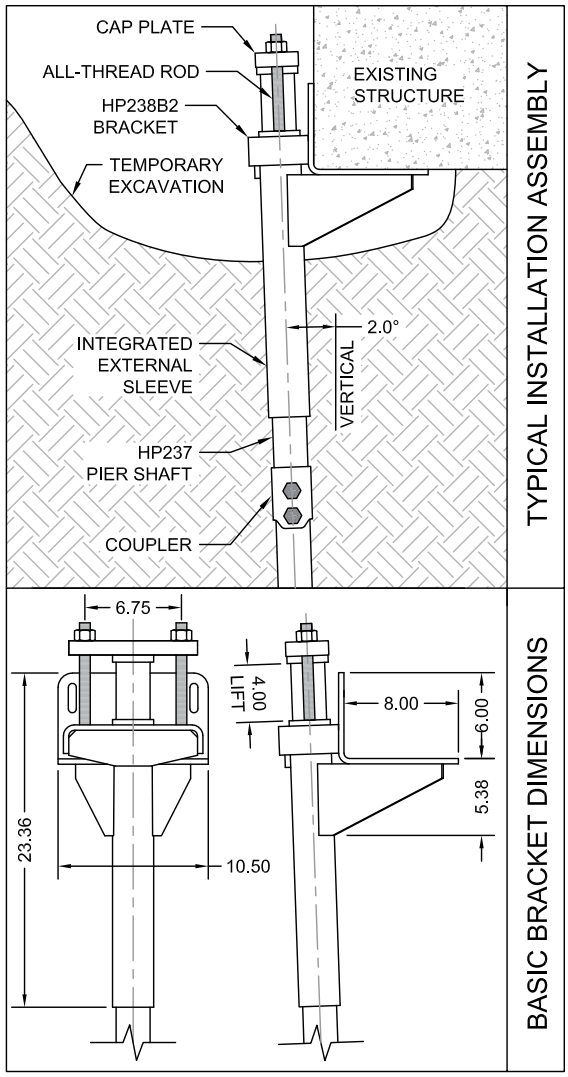

(1) Corroded capacities include a 50-year scheduled sacrificial loss in thickness per ICC-ES AC358.

(2) Hot-dip galvanized coating in accordance with ASTM A123.

(3) Optional hardware utilizes similar sized contour (coil) thread made from AISI 1045, tensile strength = 120 ksi. Slightly lower tensile strength material does not govern the listed capacities.

(4) Brackets shall be used for support of structures that are considered to be fixed from translation. Structures that are not fixed from translation shall be braced in some manner prior to installing retrofit bracket systems.

(5) Allowable capacities consider continuous lateral soil confinement in soils with SPT N-values ≥ 4. Piles with exposed unbraced lengths or piles placed in weaker or fluid soils should be evaluated on a case-by-case basis by the project engineer.

(6) Concrete bearing assumes a minimum compressive strength (f'_c) of 2,500 psi. Local concrete bending and other local design checks should be evaluated on a case-by-case basis by the project engineer.

(7) Listed allowable capacities are for the specific shaft/bracket combination shown. System capacity should also not exceed the installed torque-correlated soil capacity (See Shaft Specifications & Capacities).

© 2024 Supportworks®
All Rights Reserved

HP238BML Bracket Specifications & Capacities when used with the HP237 Helical Pile System

Bracket:
Weldment manufactured from ⅜" and 1" ASTM A36 plate.

Integrated External Sleeve:
Ø2.875" x 0.203" wall x 15" long
ASTM A500 Grade B or C
Yield strength = 60 ksi (min)
Tensile strength = 70 ksi (min)

Bracket Hardware:
(1) - Ø1¼" x 6" long lifting bolt Grade 5
Tensile strength = 105 ksi (min)
Electrozinc plated per ASTM B633

Bracket Finish:
Available plain or hot-dip galvanized[2]

	Allowable Bracket Capacity[3,4,5,6] R_n/Ω
	(kips)
Plain	6.0
Plain Corroded[1]	4.6
Galvanized Corroded[1,2]	5.6

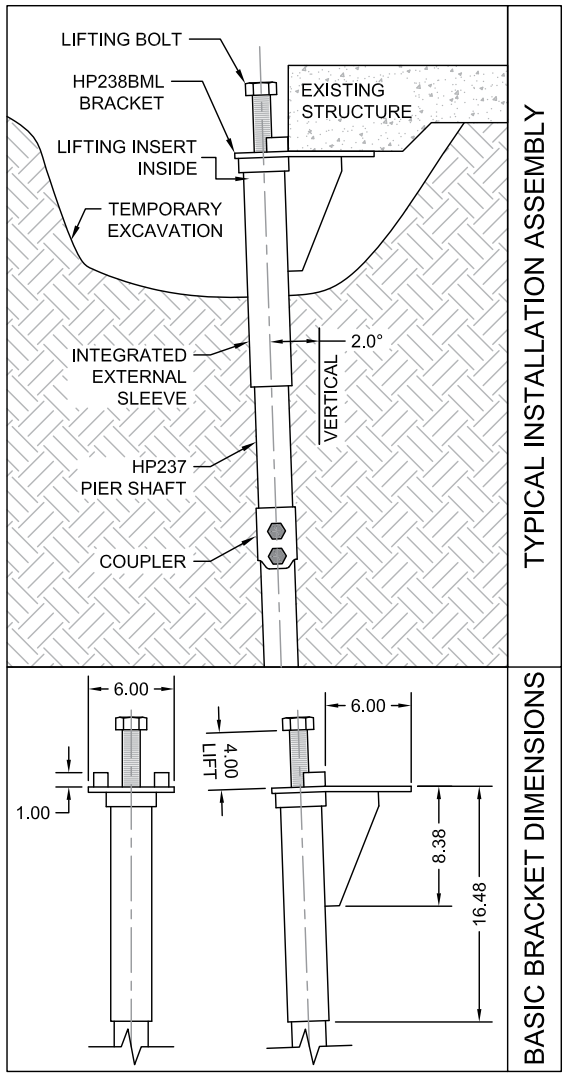

(1) Corroded capacities include a 50-year scheduled sacrificial loss in thickness per ICC-ES AC358.

(2) Hot-dip galvanized coating in accordance with ASTM A123.

(3) Brackets shall be used for support of structures that are considered to be fixed from translation. Structures that are not fixed from translation shall be braced in some manner prior to installing retrofit bracket systems.

(4) Allowable capacities consider continuous lateral soil confinement in soils with SPT N-values ≥ 4. Piles with exposed unbraced lengths or piles placed in weaker or fluid soils should be evaluated on a case-by-case basis by the project engineer.

(5) Concrete bearing assumes a minimum compressive strength (f'_c) of 2,500 psi. Local concrete bending and other local design checks should be evaluated on a case-by-case basis by the project engineer.

(6) Listed allowable capacities are for the specific shaft/bracket combination shown. System capacity should also not exceed the installed torque-correlated soil capacity (See Shaft Specifications & Capacities).

© 2024 Supportworks®
All Rights Reserved

HP237 Helix Plate Net Bearing Areas

H-Style Plates

Plate Diameter (inches)	Area (ft^2)
6	0.17
8	0.32
10	0.51
12	0.75
14	1.04
16	1.37

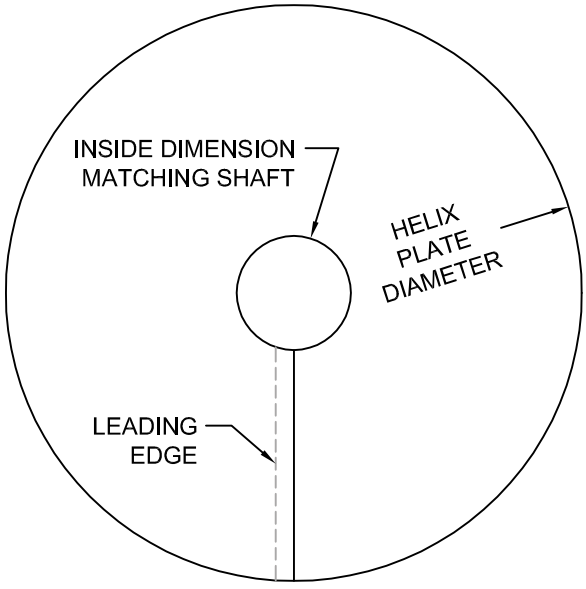

V-Style Plates(1)

Plate Diameter (inches)	Area (ft^2)
6	0.15
8	0.29
10	0.46
12	0.67
14	0.92
16	1.20

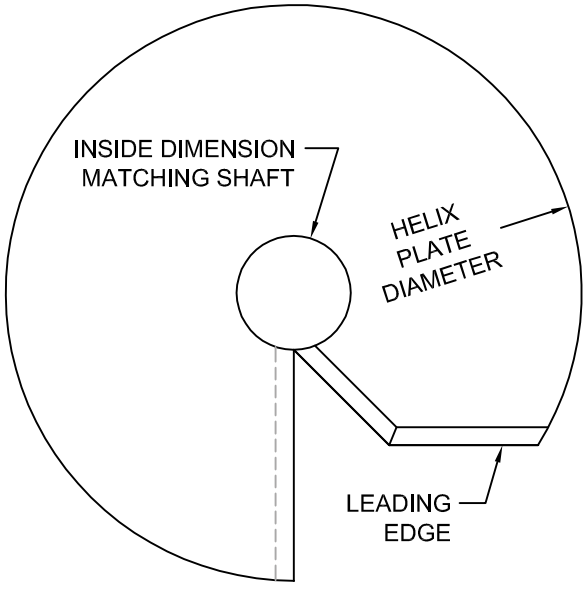

(1) V-Style plates feature a special cut on the leading edge (or cutting edge). This edge is cut at two successive 45° angles to roughly simulate a spiral. This is in addition to the 45° bevel on the leading edge which is a standard feature for helix plates of both styles. V-Style plates are appropriate for use in applications where rocky or rubble-filled soils are anticipated, or where very dense layers need to be penetrated.

© 2024 Supportworks®
All Rights Reserved

HP287

© 2024 Supportworks®
All Rights Reserved

HP287 Shaft Specifications & Capacities

Shaft Material:
Ø2.875" x 0.203" wall
ASTM A500 Grade B or C
Yield strength = 60 ksi (min)
Tensile strength = 70 ksi (min)

Shaft Coupler Material:
Ø3.500" x 0.281" wall
ASTM A513 Type 5 Grade 1026
Yield strength = 70 ksi (min)
Tensile strength = 80 ksi (min)

Helix Plates:
ASTM A572 Grade 50
⅜" thick (standard)
½" thick (available)
Helix plate geometry conforming to ICC-ES AC358

Shaft Coupling Hardware:
(2) - Ø¾" Grade 5 bolts with nuts
Electrozinc plated per ASTM B633

Surface Finish of Shaft Segments:
Available plain or hot-dip galvanized[2]

Nominal Thickness	**0.203 (in)**
Design Thickness[3]	**0.189 (in)**

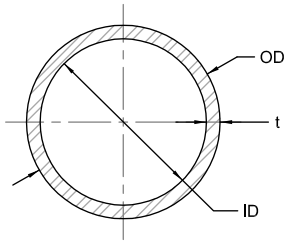

	Plain	Plain Corroded[1]	Galvanized Corroded[1,2]
OD (in)	2.875	2.839	2.865
t (in)	0.189	0.153	0.179
ID (in)	2.497	2.533	2.507
A (in²)	1.59	1.29	1.51
I (in⁴)	1.45	1.17	1.37
S (in³)	1.01	0.82	0.96
Z (in³)	1.37	1.11	1.29
r (in)	0.95	0.95	0.95
Shaft Max Allowable Compression Capacity[4,5] P_n/Ω (kips)	**55.8**	**45.2**	**52.9**
Shaft Max Allowable Tension Capacity[5] P_n/Ω (kips)	**30.6**	**23.6**	**27.6**

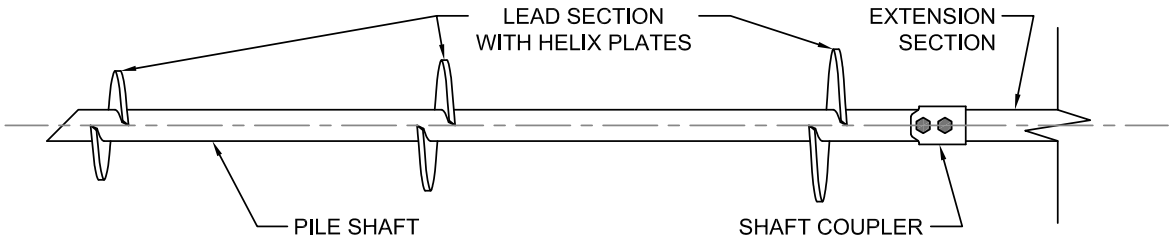

Default Torque Correlation Factor[6] K_t = 9 (ft^{-1})	**Maximum Ultimate Soil Capacity[7] Q_u = 50.4 (kips)**
Maximum Installation Torque T = 5,600 (ft-lb)	**Maximum Allowable Soil Capacity[7] Q_a = 25.2 (kips) FOS = 2.0**

(1) Corroded properties and capacities include a 50-year scheduled sacrificial loss in thickness per ICC-ES AC358.

(2) Hot-dip galvanized coating in accordance with ASTM A123.

(3) Design thickness for HSS and Pipe based on 93% of nominal thickness per AISC.

(4) Allowable mechanical compression capacities consider continuous lateral soil confinement in soils with SPT N-values ≥ 4. Piles with exposed unbraced lengths or piles placed in weaker or fluid soils should be evaluated on a case-by-case basis by the project engineer.

(5) Listed mechanical capacities are for the shaft and coupled connections only. System capacity should also not exceed the installed allowable torque-correlated soil capacity or the allowable capacity of the respective bracket (see additional bracket tables).

(6) Default K_t factor is consistent with that listed in ICC-ES AC358. This value is generally conservative. Site-specific K_t factors can be determined for a given project with full-scale load testing.

(7) Soil capacities listed are at maximum installation torque. Ultimate soil capacity is based on the equation $Q_u = K_t \times T$. Allowable soil capacity is obtained by dividing the ultimate capacity by an appropriate factor of safety ($Q_a = Q_u$ / FOS). Although a factor of safety of 2.0 is commonly used, a higher or lower factor of safety may be considered at the discretion of the helical pile designer or as dictated by local code requirements. System capacity should also not exceed the mechanical capacity of the shaft or those listed in the respective bracket capacity tables.

© 2024 Supportworks®
All Rights Reserved

HP288NCB Bracket Specifications & Capacities when used with the HP287 Helical Pile System

Bracket Sleeve Material:
Ø3.500" x 0.250" wall
ASTM A513 Type 5 Grade 1026
Yield strength = 70 ksi (min)
Tensile strength = 80 ksi (min)

Cap Plate Material:
¾" x 6.00" square
ASTM A36

Bracket Hardware:
(2) - Ø¾" Grade 5 bolts with nuts
Electrozinc plated per ASTM B633

Bracket Finish:
Available plain or hot-dip galvanized[2]

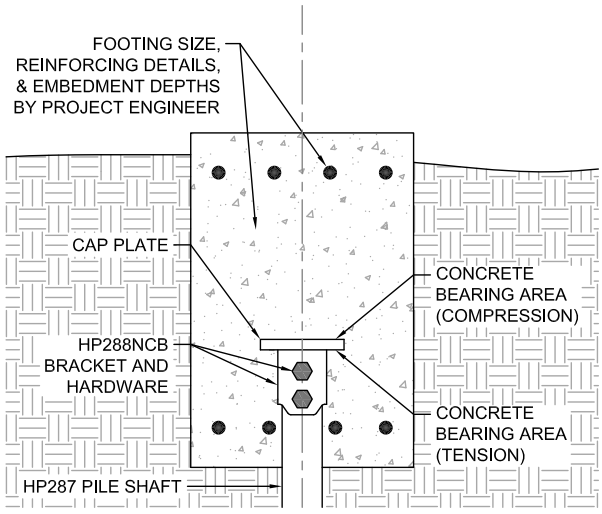

Concrete Bearing Area[6] (Compression) = 36.0 in²
Concrete Bearing Area[6] (Tension) = 26.4 in²

		Allowable Bracket Capacity[4] R_n/Ω			
		Compression[3] (kips)	Concrete Bearing[6] (ksi)	Tension (kips)	Concrete Bearing[6] (ksi)
2 Bolts	Plain	55.8	1.55	30.6	1.16
	Plain Corroded[1]	45.2	1.27	23.6	0.91
	Galvanized Corroded[1,2]	52.9	1.47	27.6	1.05
1 Bolt	Plain	55.8	1.55	15.3	0.58
	Plain Corroded[1]	45.2	1.27	11.8	0.45
	Galvanized Corroded[1,2]	52.9	1.47	13.8	0.53
0 Bolts[5]	Plain	55.8	1.55	0	0
	Plain Corroded[1]	45.2	1.27	0	0
	Galvanized Corroded[1,2]	52.9	1.47	0	0

(1) Corroded capacities include a 50-year scheduled sacrificial loss in thickness per ICC-ES AC358.

(2) Hot-dip galvanized coating in accordance with ASTM A123.

(3) Allowable compression capacities consider continuous lateral soil confinement in soils with SPT N-values ≥ 4. Piles with exposed unbraced lengths or piles placed in weaker or fluid soils should be evaluated on a case-by-case basis by the project engineer.

(4) Listed capacities include limiting mechanical capacities of the shaft when the shaft and bracket are combined as a system. System capacity should also not exceed the installed allowable torque-correlated soil capacity (See Shaft Specifications & Capacities).

(5) Applications utilizing no bolts should either be tack welded or utilize some other mechanism to immobilize the bracket and maintain firm contact between the cap plate and pile shaft throughout construction and concrete placement.

(6) Concrete bearing values provided are the uniform bearing stresses required to achieve the full corresponding bracket capacity. Allowable concrete bearing is a function of several project specific variables including depth of embedment, edge distance, and concrete compressive strength (f'_c). When allowable concrete bearing stresses are lower than these values, corresponding bracket capacities can be obtained by multiplying the actual allowable concrete bearing stress by the respective bearing areas provided, but should not exceed the capacities listed in this table. Other concrete design checks including shear, bending, and punching of the supported structure are also project specific and shall be the responsibility of the project engineer.

© 2024 Supportworks®
All Rights Reserved

HP288NCB8 Bracket Specifications & Capacities when used with the HP287 Helical Pile System

Bracket Sleeve Material:
Ø3.500" x 0.250" wall
ASTM A513 Type 5 Grade 1026
Yield strength = 70 ksi (min)
Tensile strength = 80 ksi (min)

Cap Plate Material:
¾" x 8.00" square
ASTM A36

Bracket Hardware:
(2) - Ø¾" Grade 5 bolts with nuts
Electrozinc plated per ASTM B633

Bracket Finish:
Available plain or hot-dip galvanized[2]

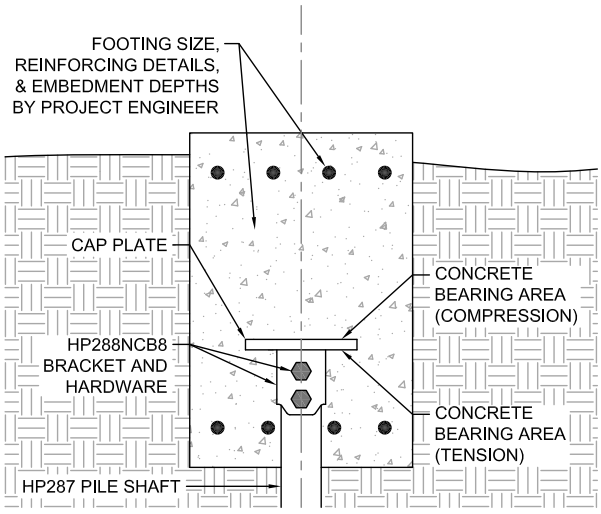

Concrete Bearing Area[6] (Compression) = 64.0 in²
Concrete Bearing Area[6] (Tension) = 54.4 in²

		Allowable Bracket Capacity[4] R_n/Ω			
		Compression[3] (kips)	Concrete Bearing[6] (ksi)	Tension (kips)	Concrete Bearing[6] (ksi)
2 Bolts	Plain	47.9	0.75	30.6	0.56
	Plain Corroded[1]	43.1	0.68	23.6	0.44
	Galvanized Corroded[1,2]	46.6	0.73	27.6	0.51
1 Bolt	Plain	47.9	0.75	15.3	0.28
	Plain Corroded[1]	43.1	0.68	11.8	0.22
	Galvanized Corroded[1,2]	46.6	0.73	13.8	0.25
0 Bolts[5]	Plain	47.9	0.75	0	0
	Plain Corroded[1]	43.1	0.68	0	0
	Galvanized Corroded[1,2]	46.6	0.73	0	0

(1) Corroded capacities include a 50-year scheduled sacrificial loss in thickness per ICC-ES AC358.

(2) Hot-dip galvanized coating in accordance with ASTM A123.

(3) Allowable compression capacities consider continuous lateral soil confinement in soils with SPT N-values ≥ 4. Piles with exposed unbraced lengths or piles placed in weaker or fluid soils should be evaluated on a case-by-case basis by the project engineer.

(4) Listed capacities include limiting mechanical capacities of the shaft when the shaft and bracket are combined as a system. System capacity should also not exceed the installed allowable torque-correlated soil capacity (See Shaft Specifications & Capacities).

(5) Applications utilizing no bolts should either be tack welded or utilize some other mechanism to immobilize the bracket and maintain firm contact between the cap plate and pile shaft throughout construction and concrete placement.

(6) Concrete bearing values provided are the uniform bearing stresses required to achieve the full corresponding bracket capacity. Allowable concrete bearing is a function of several project specific variables including depth of embedment, edge distance, and concrete compressive strength (f'_c). When allowable concrete bearing stresses are lower than these values, corresponding bracket capacities can be obtained by multiplying the actual allowable concrete bearing stress by the respective bearing areas provided, but should not exceed the capacities listed in this table. Other concrete design checks including shear, bending, and punching of the supported structure are also project specific and shall be the responsibility of the project engineer.

© 2024 Supportworks®
All Rights Reserved

HP288NCBE Bracket Specifications & Capacities when used with the HP287 Helical Pile System

Cap Plate Material:
¾" x 6.00" square
ASTM A36

Bracket Hardware[5]:
½" square bar stock with tapped hole and Ø¼" retention bolt

Bracket Finish:
Available plain or hot-dip galvanized[2]

Concrete Bearing Area[6] (Compression) = 36.0 in²
Concrete Bearing Area[6] (Tension) = N/A

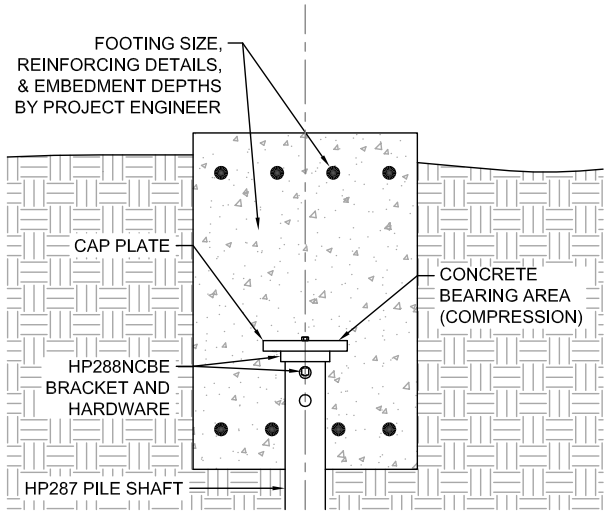

	Allowable Bracket Capacity[4] R_n/Ω			
	Compression[3] (kips)	Concrete Bearing[6] (ksi)	Tension (kips)	Concrete Bearing[6] (ksi)
Plain	54.0	1.10	0	0
Plain Corroded[1]	45.2	0.93	0	0
Galvanized Corroded[1,2]	52.4	1.07	0	0

(1) Corroded capacities include a 50-year scheduled sacrificial loss in thickness per ICC-ES AC358.

(2) Hot-dip galvanized coating in accordance with ASTM A123.

(3) Allowable compression capacities consider continuous lateral soil confinement in soils with SPT N-values ≥ 4. Piles with exposed unbraced lengths or piles placed in weaker or fluid soils should be evaluated on a case-by-case basis by the project engineer.

(4) Listed capacities include limiting mechanical capacities of the shaft when the shaft and bracket are combined as a system. System capacity should also not exceed the installed allowable torque-correlated soil capacity (See Shaft Specifications & Capacities).

(5) Supplied bracket hardware does not contribute to the system strength and is only intended to immobilize the bracket. Other methods, such as tack welds, may be substituted to maintain firm contact between the cap plate and pile shaft throughout construction and concrete placement at the discretion of the project engineer.

(6) Concrete bearing values provided are the uniform bearing stresses required to achieve the full corresponding bracket capacity. Allowable concrete bearing is a function of several project specific variables including depth of embedment, edge distance, and concrete compressive strength (f'_c). When allowable concrete bearing stresses are lower than these values, corresponding bracket capacities can be obtained by multiplying the actual allowable concrete bearing stress by the respective bearing areas provided, but should not exceed the capacities listed in this table. Other concrete design checks including shear, bending, and punching of the supported structure are also project specific and shall be the responsibility of the project engineer.

© 2024 Supportworks®
All Rights Reserved

HP288NCBE8 Bracket Specifications & Capacities when used with the HP287 Helical Pile System

Cap Plate Material:
¾" x 8.00" square
ASTM A36

Bracket Hardware[5]:
½" square bar stock with tapped hole and Ø¼" retention bolt

Bracket Finish:
Available plain or hot-dip galvanized[2]

Concrete Bearing Area[6] (Compression) = 64.0 in²
Concrete Bearing Area[6] (Tension) = N/A

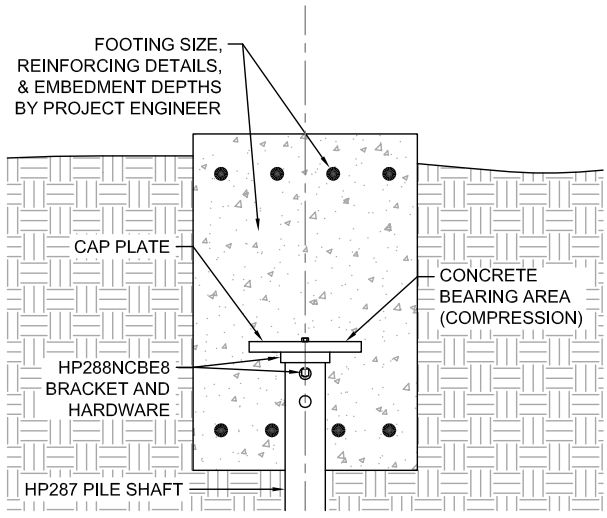

	Allowable Bracket Capacity[4] R_n/Ω			
	Compression[3] (kips)	**Concrete Bearing[6] (ksi)**	**Tension (kips)**	**Concrete Bearing[6] (ksi)**
Plain	47.9	0.75	0	0
Plain Corroded[1]	43.1	0.68	0	0
Galvanized Corroded[1,2]	46.6	0.73	0	0

(1) Corroded capacities include a 50-year scheduled sacrificial loss in thickness per ICC-ES AC358.

(2) Hot-dip galvanized coating in accordance with ASTM A123.

(3) Allowable compression capacities consider continuous lateral soil confinement in soils with SPT N-values ≥ 4. Piles with exposed unbraced lengths or piles placed in weaker or fluid soils should be evaluated on a case-by-case basis by the project engineer.

(4) Listed capacities include limiting mechanical capacities of the shaft when the shaft and bracket are combined as a system. System capacity should also not exceed the installed allowable torque-correlated soil capacity (See Shaft Specifications & Capacities).

(5) Supplied bracket hardware does not contribute to the system strength and is only intended to immobilize the bracket. Other methods, such as tack welds, may be substituted to maintain firm contact between the cap plate and pile shaft throughout construction and concrete placement at the discretion of the project engineer.

(6) Concrete bearing values provided are the uniform bearing stresses required to achieve the full corresponding bracket capacity. Allowable concrete bearing is a function of several project specific variables including depth of embedment, edge distance, and concrete compressive strength (f'_c). When allowable concrete bearing stresses are lower than these values, corresponding bracket capacities can be obtained by multiplying the actual allowable concrete bearing stress by the respective bearing areas provided, but should not exceed the capacities listed in this table. Other concrete design checks including shear, bending, and punching of the supported structure are also project specific and shall be the responsibility of the project engineer.

© 2024 Supportworks®
All Rights Reserved

FS288BL2 Bracket Specifications & Capacities when used with the HP287 Helical Pile System

Bracket:
Weldment manufactured from ¼", 5⁄16", and ⅜"
ASTM A572 Grade 50 plate

External Sleeve:
Ø3.500" x 0.216" wall x 30" long with
trumpet flare at one end
ASTM A500 Grade B or C
Yield strength = 50 ksi (min)
Tensile strength = 62 ksi (min)

Cap Plate:
1" x 4.00" x 8.25" ASTM A572 Grade 65

Bracket Hardware(3):
(2) - Ø¾" x 16" long all-thread rod Grade B7
Tensile strength = 125 ksi (min)
Electrozinc plated per ASTM B633

Bracket Finish:
Available plain or hot-dip galvanized(2)

	Allowable Bracket Capacity(4,5,6,7) R_n/Ω
	(kips)
Plain	24.2
Plain Corroded(1)	19.9
Galvanized Corroded(1,2)	23.0

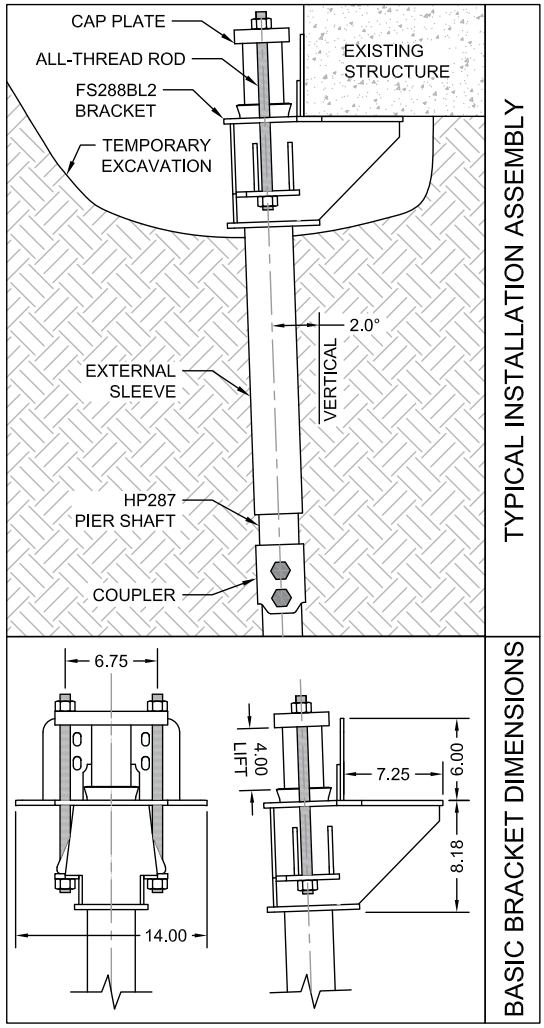

(1) Corroded capacities include a 50-year scheduled sacrificial loss in thickness per ICC-ES AC358.

(2) Hot-dip galvanized coating in accordance with ASTM A123.

(3) Optional hardware utilizes similar sized contour (coil) thread made from AISI 1045, tensile strength = 120 ksi. Slightly lower tensile strength material does not govern the listed capacities.

(4) Brackets shall be used for support of structures that are considered to be fixed from translation. Structures that are not fixed from translation shall be braced in some manner prior to installing retrofit bracket systems.

(5) Allowable capacities consider continuous lateral soil confinement in soils with SPT N-values ≥ 4. Piles with exposed unbraced lengths or piles placed in weaker or fluid soils should be evaluated on a case-by-case basis by the project engineer.

(6) Concrete bearing assumes a minimum compressive strength (f'_c) of 2,500 psi. Local concrete bending and other local design checks should be evaluated on a case-by-case basis by the project engineer.

(7) Listed allowable capacities are for the specific shaft/bracket combination shown. System capacity should also not exceed the installed torque-correlated soil capacity (See Shaft Specifications & Capacities).

© 2024 Supportworks®
All Rights Reserved

FS288BL2V Bracket Specifications & Capacities when used with the HP287 Helical Pile System

Bracket:
Weldment manufactured from ¼", 5⁄16", and ⅜"
ASTM A572 Grade 50 plate

External Sleeve:
Ø3.500" x 0.216" wall x 30" long with
trumpet flare at one end
ASTM A500 Grade B or C
Yield strength = 50 ksi (min)
Tensile strength = 62 ksi (min)

Cap Plate:
1" x 4.00" x 8.25" ASTM A572 Grade 65

Bracket Hardware[3]:
(2) - Ø¾" x 16" long all-thread rod Grade B7
Tensile strength = 125 ksi (min)
Electrozinc plated per ASTM B633

Bracket Finish:
Available plain or hot-dip galvanized[2]

	Allowable Bracket Capacity[4,5,6,7] R_n/Ω
	(kips)
Plain	24.2
Plain Corroded[1]	19.9
Galvanized Corroded[1,2]	23.0

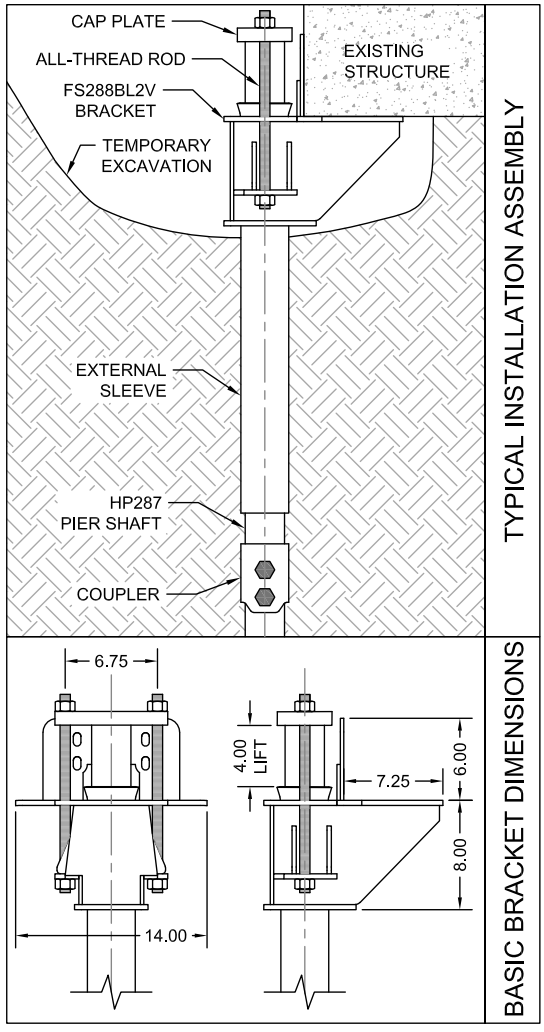

(1) Corroded capacities include a 50-year scheduled sacrificial loss in thickness per ICC-ES AC358.

(2) Hot-dip galvanized coating in accordance with ASTM A123.

(3) Optional hardware utilizes similar sized contour (coil) thread made from AISI 1045, tensile strength = 120 ksi. Slightly lower tensile strength material does not govern the listed capacities.

(4) Brackets shall be used for support of structures that are considered to be fixed from translation. Structures that are not fixed from translation shall be braced in some manner prior to installing retrofit bracket systems.

(5) Allowable capacities consider continuous lateral soil confinement in soils with SPT N-values ≥ 4. Piles with exposed unbraced lengths or piles placed in weaker or fluid soils should be evaluated on a case-by-case basis by the project engineer.

(6) Concrete bearing assumes a minimum compressive strength (f'_c) of 2,500 psi. Local concrete bending and other local design checks should be evaluated on a case-by-case basis by the project engineer.

(7) Listed allowable capacities are for the specific shaft/bracket combination shown. System capacity should also not exceed the installed torque-correlated soil capacity (See Shaft Specifications & Capacities).

© 2024 Supportworks®
All Rights Reserved

HP288B2 Bracket Specifications & Capacities when used with the HP287 Helical Pile System

Bracket:
Weldment manufactured from ⅜"
ASTM A36 plate

Integrated External Sleeve:
Ø3.500" x 0.216" wall x 20" long
ASTM A500 Grade B or C
Yield strength = 50 ksi (min)
Tensile strength = 62 ksi (min)

Cap Plate:
1" x 4.00" x 8.25" ASTM A572 Grade 65

Bracket Hardware[3]:
(2) - Ø¾" x 16" long all-thread rod Grade B7
Tensile strength = 125 ksi (min)
Electrozinc plated per ASTM B633

Bracket Finish:
Available plain or hot-dip galvanized[2]

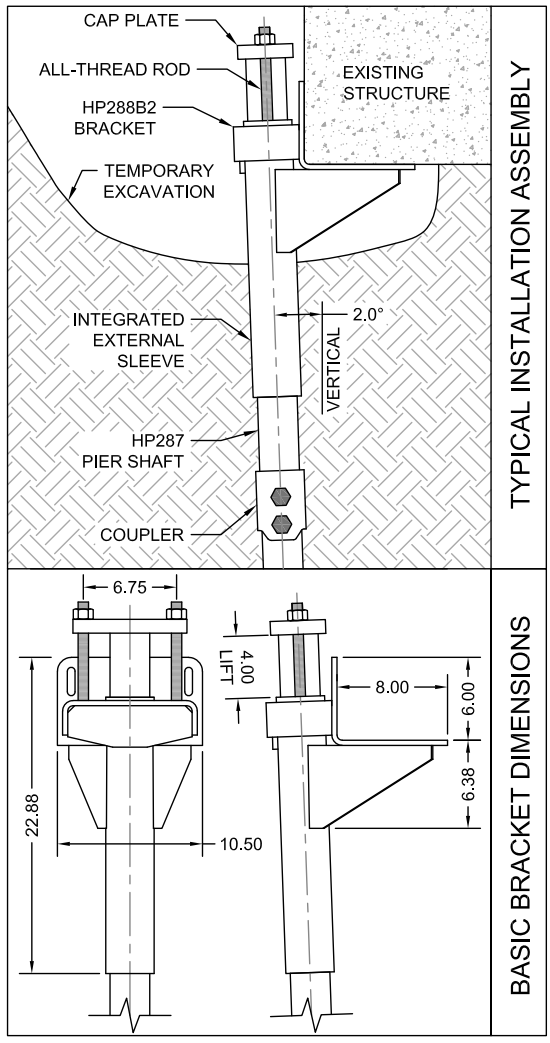

	Allowable Bracket Capacity[4,5,6,7] R_n/Ω
	(kips)
Plain	21.0
Plain Corroded[1]	17.2
Galvanized Corroded[1,2]	19.9

(1) Corroded capacities include a 50-year scheduled sacrificial loss in thickness per ICC-ES AC358.

(2) Hot-dip galvanized coating in accordance with ASTM A123.

(3) Optional hardware utilizes similar sized contour (coil) thread made from AISI 1045, tensile strength = 120 ksi. Slightly lower tensile strength material does not govern the listed capacities.

(4) Brackets shall be used for support of structures that are considered to be fixed from translation. Structures that are not fixed from translation shall be braced in some manner prior to installing retrofit bracket systems.

(5) Allowable capacities consider continuous lateral soil confinement in soils with SPT N-values ≥ 4. Piles with exposed unbraced lengths or piles placed in weaker or fluid soils should be evaluated on a case-by-case basis by the project engineer.

(6) Concrete bearing assumes a minimum compressive strength (f'_c) of 2,500 psi. Local concrete bending and other local design checks should be evaluated on a case-by-case basis by the project engineer.

(7) Listed allowable capacities are for the specific shaft/bracket combination shown. System capacity should also not exceed the installed torque-correlated soil capacity (See Shaft Specifications & Capacities).

© 2024 Supportworks®
All Rights Reserved

HP288BUL2 Bracket Specifications & Capacities when used with the HP287 Helical Pile System

Bracket:
Weldment manufactured from 5⁄16" and ½"
ASTM A572 Grade 50 plates

Integrated External Sleeve:
Ø3.500" x 0.216" wall x 20" long
ASTM A500 Grade B or C
Yield strength = 50 ksi (min)
Tensile strength = 62 ksi (min)

Cap Plate:
1" x 4.00" x 8.25" ASTM A572 Grade 65

Bracket Hardware(3):
(2) - Ø¾" x 16" long all-thread rod Grade B7
Tensile strength = 125 ksi (min)
Electrozinc plated per ASTM B633

Bracket Finish:
Available plain or hot-dip galvanized(2)

	Allowable Bracket Capacity(4,5,6,7) R_n/Ω
	(kips)
Plain	18.0
Plain Corroded(1)	14.7
Galvanized Corroded(1,2)	17.1

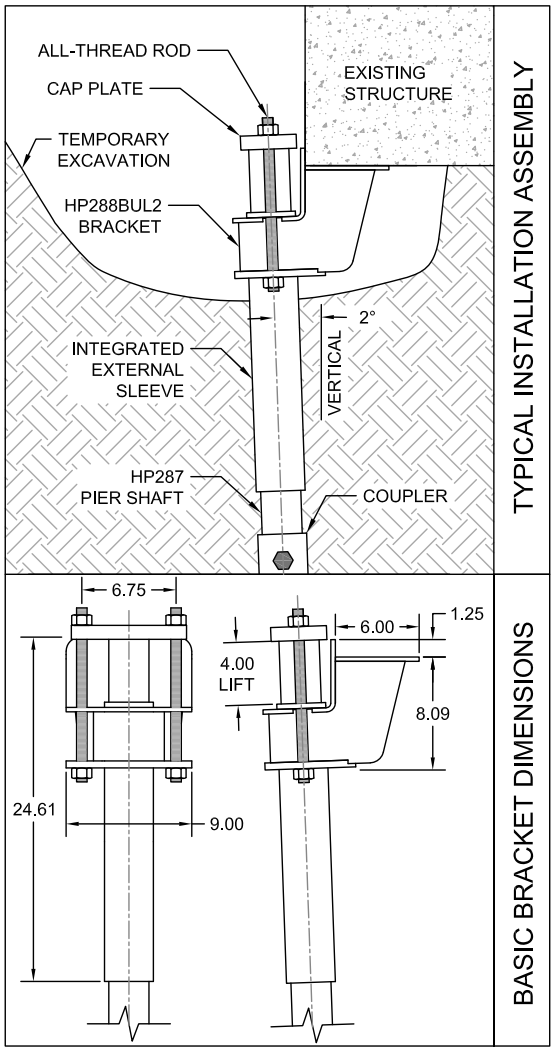

(1) Corroded capacities include a 50-year scheduled sacrificial loss in thickness per ICC-ES AC358.

(2) Hot-dip galvanized coating in accordance with ASTM A123.

(3) Optional hardware utilizes similar sized contour (coil) thread made from AISI 1045, tensile strength = 120 ksi. Slightly lower tensile strength material does not govern the listed capacities.

(4) Brackets shall be used for support of structures that are considered to be fixed from translation. Structures that are not fixed from translation shall be braced in some manner prior to installing retrofit bracket systems.

(5) Allowable capacities consider continuous lateral soil confinement in soils with SPT N-values ≥ 4. Piles with exposed unbraced lengths or piles placed in weaker or fluid soils should be evaluated on a case-by-case basis by the project engineer.

(6) Concrete bearing assumes a minimum compressive strength (f'_c) of 2,500 psi. Local concrete bending and other local design checks should be evaluated on a case-by-case basis by the project engineer.

(7) Listed allowable capacities are for the specific shaft/bracket combination shown. System capacity should also not exceed the installed torque-correlated soil capacity (See Shaft Specifications & Capacities).

© 2024 Supportworks®
All Rights Reserved

HP288BML Bracket Specifications & Capacities when used with the HP287 Helical Pile System

Bracket:
Weldment manufactured from ⅜"
ASTM A36 plate

Integrated External Sleeve:
Ø3.500" x 0.216" wall x 20" long
ASTM A500 Grade B or C
Yield strength = 50 ksi (min)
Tensile strength = 62 ksi (min)

Bracket Hardware:
(1) - Ø1¼" x 6" long lifting bolt with nut Grade 5
Tensile strength = 105 ksi (min)
Electrozinc plated per ASTM B633

Bracket Finish:
Available plain or hot-dip galvanized[2]

	Allowable Bracket Capacity[3,4,5,6] R_n/Ω
	(kips)
Plain	12.0
Plain Corroded[1]	9.8
Galvanized Corroded[1,2]	11.4

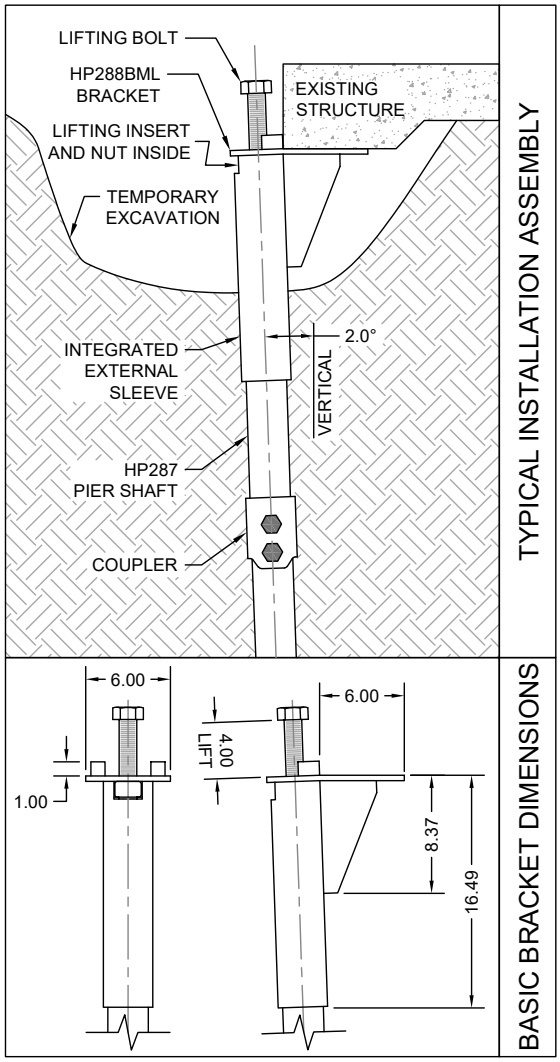

(1) Corroded capacities include a 50-year scheduled sacrificial loss in thickness per ICC-ES AC358.

(2) Hot-dip galvanized coating in accordance with ASTM A123.

(3) Brackets shall be used for support of structures that are considered to be fixed from translation. Structures that are not fixed from translation shall be braced in some manner prior to installing retrofit bracket systems.

(4) Allowable capacities consider continuous lateral soil confinement in soils with SPT N-values ≥ 4. Piles with exposed unbraced lengths or piles placed in weaker or fluid soils should be evaluated on a case-by-case basis by the project engineer.

(5) Concrete bearing assumes a minimum compressive strength (f'_c) of 2,500 psi. Local concrete bending and other local design checks should be evaluated on a case-by-case basis by the project engineer.

(6) Listed allowable capacities are for the specific shaft/bracket combination shown. System capacity should also not exceed the installed torque-correlated soil capacity (See Shaft Specifications & Capacities).

© 2024 Supportworks®
All Rights Reserved

HP287 Helix Plate Net Bearing Areas

H-Style Plates

Plate Diameter (inches)	Area (ft^2)
6	0.15
8	0.30
10	0.50
12	0.74
14	1.02
16	1.35

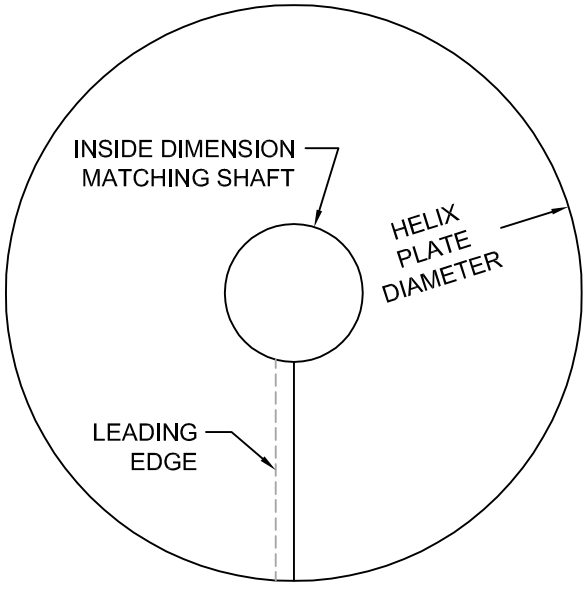

V-Style Plates(1)

Plate Diameter (inches)	Area (ft^2)
6	0.14
8	0.28
10	0.45
12	0.66
14	0.91
16	1.19

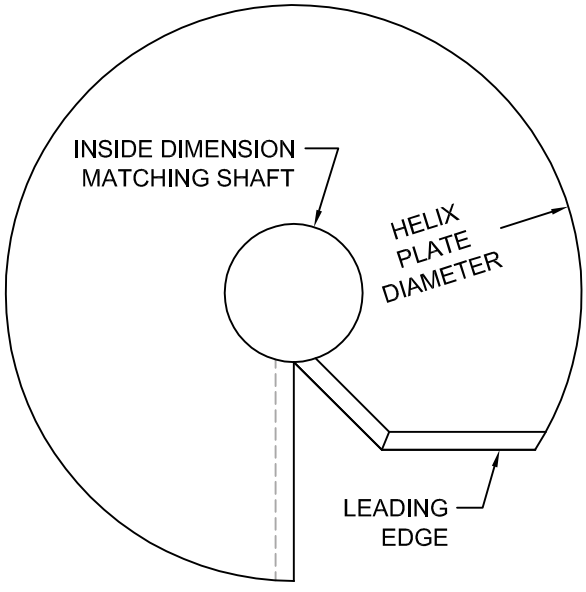

(1) V-Style plates feature a special cut on the leading edge (or cutting edge). This edge is cut at two successive 45° angles to roughly simulate a spiral. This is in addition to the 45° bevel on the leading edge which is a standard feature for helix plates of both styles. V-Style plates are appropriate for use in applications where rocky or rubble-filled soils are anticipated, or where very dense layers need to be penetrated.

© 2024 Supportworks®
All Rights Reserved

HP288

© 2024 Supportworks®
All Rights Reserved

HP288 Shaft Specifications & Capacities

Shaft Material:
Ø2.875" x 0.276" wall
ASTM A500 Grade B or C
Yield strength = 60 ksi (min)
Tensile strength = 70 ksi (min)

Shaft Coupler Material:
Ø3.500" x 0.281" wall
ASTM A513 Type 5 Grade 1026
Yield strength = 70 ksi (min)
Tensile strength = 80 ksi (min)

Helix Plates:
ASTM A572 Grade 50
⅜" thick (standard)
½" thick (available)
Helix plate geometry conforming to ICC-ES AC358

Shaft Coupling Hardware:
(2) - Ø¾" Grade 5 bolts with nuts
Electrozinc plated per ASTM B633

Surface Finish of Shaft Segments:
Available plain or hot-dip galvanized[2]

Nominal Thickness	**0.276 (in)**
Design Thickness[3]	**0.257 (in)**

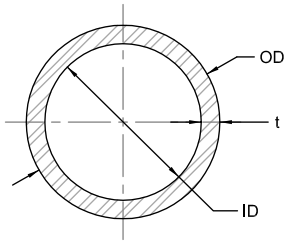

	Plain	Plain Corroded[1]	Galvanized Corroded[1,2]
OD (in)	2.875	2.839	2.865
t (in)	0.257	0.221	0.247
ID (in)	2.361	2.397	2.371
A (in²)	2.11	1.82	2.03
I (in⁴)	1.83	1.57	1.76
S (in³)	1.27	1.10	1.23
Z (in³)	1.77	1.52	1.70
r (in)	0.93	0.93	0.93
Shaft Max Allowable Compression Capacity[4,5] P_n/Ω (kips)	**74.0**	**63.6**	**71.1**
Shaft Max Allowable Tension Capacity[5] P_n/Ω (kips)	**41.6**	**34.1**	**38.1**

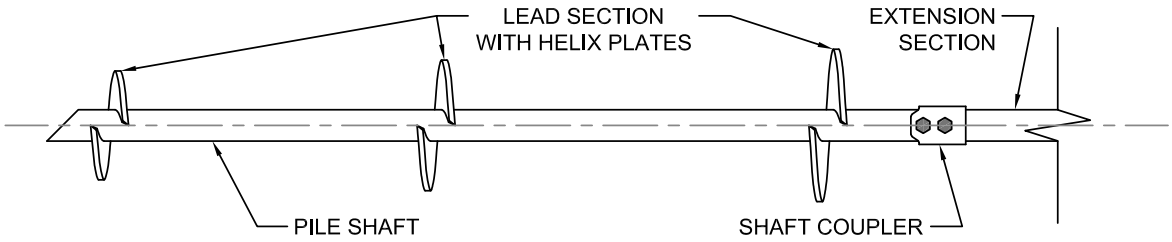

Default Torque Correlation Factor[6] K_t = 9 (ft^{-1})	**Maximum Ultimate Soil Capacity[7] Q_u = 71.1 (kips)**
Maximum Installation Torque T = 7,900 (ft-lb)	**Maximum Allowable Soil Capacity[7] Q_a = 35.5 (kips) FOS = 2.0**

(1) Corroded properties and capacities include a 50-year scheduled sacrificial loss in thickness per ICC-ES AC358.

(2) Hot-dip galvanized coating in accordance with ASTM A123.

(3) Design thickness for HSS and Pipe based on 93% of nominal thickness per AISC.

(4) Allowable mechanical compression capacities consider continuous lateral soil confinement in soils with SPT N-values ≥ 4. Piles with exposed unbraced lengths or piles placed in weaker or fluid soils should be evaluated on a case-by-case basis by the project engineer.

(5) Listed mechanical capacities are for the shaft and coupled connections only. System capacity should also not exceed the installed allowable torque-correlated soil capacity or the allowable capacity of the respective bracket (see additional bracket tables).

(6) Default K_t factor is consistent with that listed in ICC-ES AC358. This value is generally conservative. Site-specific K_t factors can be determined for a given project with full-scale load testing.

(7) Soil capacities listed are at maximum installation torque. Ultimate soil capacity is based on the equation $Q_u = K_t \times T$. Allowable soil capacity is obtained by dividing the ultimate capacity by an appropriate factor of safety ($Q_a = Q_u / FOS$). Although a factor of safety of 2.0 is commonly used, a higher or lower factor of safety may be considered at the discretion of the helical pile designer or as dictated by local code requirements. System capacity should also not exceed the mechanical capacity of the shaft or those listed in the respective bracket capacity tables.

© 2024 Supportworks®
All Rights Reserved

HP288NCB Bracket Specifications & Capacities when used with the HP288 Helical Pile System

Bracket Sleeve Material:
Ø3.500" x 0.250" wall
ASTM A513 Type 5 Grade 1026
Yield strength = 70 ksi (min)
Tensile strength = 80 ksi (min)

Cap Plate Material:
¾" x 6.00" square
ASTM A36

Bracket Hardware:
(2) - Ø¾" Grade 5 bolts with nuts
Electrozinc plated per ASTM B633

Bracket Finish:
Available plain or hot-dip galvanized[2]

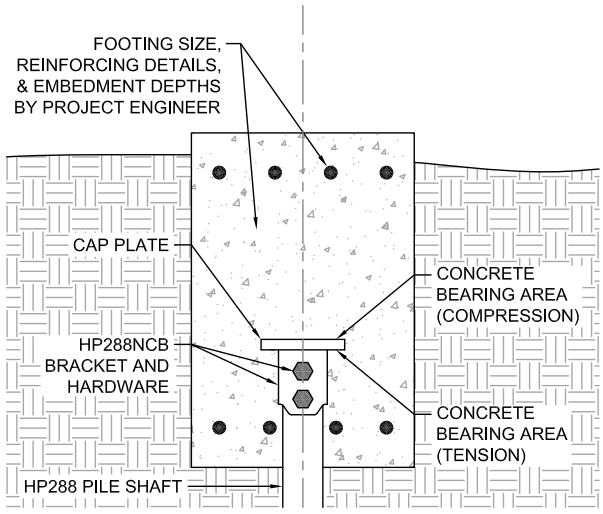

Concrete Bearing Area[6] (Compression) = 36.0 in²
Concrete Bearing Area[6] (Tension) = 26.4 in²

		Allowable Bracket Capacity[4] R_n/Ω			
		Compression[3] (kips)	Concrete Bearing[6] (ksi)	Tension (kips)	Concrete Bearing[6] (ksi)
2 Bolts	Plain	64.0	1.78	41.6	1.58
	Plain Corroded[1]	57.5	1.62	34.1	1.31
	Galvanized Corroded[1,2]	62.1	1.73	38.1	1.45
1 Bolt	Plain	64.0	1.78	16.0	0.61
	Plain Corroded[1]	57.5	1.62	13.0	0.49
	Galvanized Corroded[1,2]	62.1	1.73	15.2	0.58
0 Bolts[5]	Plain	64.0	1.78	0	0
	Plain Corroded[1]	57.5	1.62	0	0
	Galvanized Corroded[1,2]	62.1	1.73	0	0

(1) Corroded capacities include a 50-year scheduled sacrificial loss in thickness per ICC-ES AC358.

(2) Hot-dip galvanized coating in accordance with ASTM A123.

(3) Allowable compression capacities consider continuous lateral soil confinement in soils with SPT N-values ≥ 4. Piles with exposed unbraced lengths or piles placed in weaker or fluid soils should be evaluated on a case-by-case basis by the project engineer.

(4) Listed capacities include limiting mechanical capacities of the shaft when the shaft and bracket are combined as a system. System capacity should also not exceed the installed allowable torque-correlated soil capacity (See Shaft Specifications & Capacities).

(5) Applications utilizing no bolts should either be tack welded or utilize some other mechanism to immobilize the bracket and maintain firm contact between the cap plate and pile shaft throughout construction and concrete placement.

(6) Concrete bearing values provided are the uniform bearing stresses required to achieve the full corresponding bracket capacity. Allowable concrete bearing is a function of several project specific variables including depth of embedment, edge distance, and concrete compressive strength (f'c). When allowable concrete bearing stresses are lower than these values, corresponding bracket capacities can be obtained by multiplying the actual allowable concrete bearing stress by the respective bearing areas provided, but should not exceed the capacities listed in this table. Other concrete design checks including shear, bending, and punching of the supported structure are also project specific and shall be the responsibility of the project engineer.

© 2024 Supportworks®
All Rights Reserved

HP288NCB8 Bracket Specifications & Capacities when used with the HP288 Helical Pile System

Bracket Sleeve Material:
Ø3.500" x 0.250" wall
ASTM A513 Type 5 Grade 1026
Yield strength = 70 ksi (min)
Tensile strength = 80 ksi (min)

Cap Plate Material:
¾" x 8.00" square
ASTM A36

Bracket Hardware:
(2) - Ø¾" Grade 5 bolts with nuts
Electrozinc plated per ASTM B633

Bracket Finish:
Available plain or hot-dip galvanized[2]

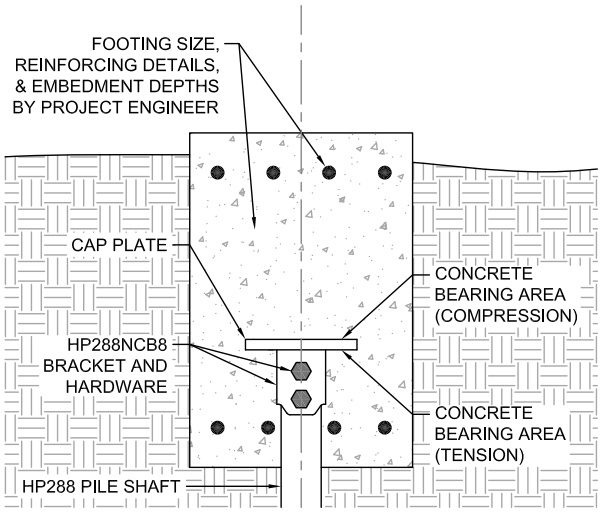

Concrete Bearing Area[6] (Compression) = 64.0 in²
Concrete Bearing Area[6] (Tension) = 54.4 in²

		Allowable Bracket Capacity[4] R_n/Ω			
		Compression[3] (kips)	Concrete Bearing[6] (ksi)	Tension (kips)	Concrete Bearing[6] (ksi)
2 Bolts	Plain	47.9	0.75	41.6	0.77
	Plain Corroded[1]	43.1	0.68	34.1	0.63
	Galvanized Corroded[1,2]	46.6	0.73	38.1	0.70
1 Bolt	Plain	47.9	0.75	16.0	0.61
	Plain Corroded[1]	43.1	0.68	13.0	0.49
	Galvanized Corroded[1,2]	46.6	0.73	15.2	0.58
0 Bolts[5]	Plain	47.9	0.75	0	0
	Plain Corroded[1]	43.1	0.68	0	0
	Galvanized Corroded[1,2]	46.6	0.73	0	0

(1) Corroded capacities include a 50-year scheduled sacrificial loss in thickness per ICC-ES AC358.

(2) Hot-dip galvanized coating in accordance with ASTM A123.

(3) Allowable compression capacities consider continuous lateral soil confinement in soils with SPT N-values ≥ 4. Piles with exposed unbraced lengths or piles placed in weaker or fluid soils should be evaluated on a case-by-case basis by the project engineer.

(4) Listed capacities include limiting mechanical capacities of the shaft when the shaft and bracket are combined as a system. System capacity should also not exceed the installed allowable torque-correlated soil capacity (See Shaft Specifications & Capacities).

(5) Applications utilizing no bolts should either be tack welded or utilize some other mechanism to immobilize the bracket and maintain firm contact between the cap plate and pile shaft throughout construction and concrete placement.

(6) Concrete bearing values provided are the uniform bearing stresses required to achieve the full corresponding bracket capacity. Allowable concrete bearing is a function of several project specific variables including depth of embedment, edge distance, and concrete compressive strength (f'_c). When allowable concrete bearing stresses are lower than these values, corresponding bracket capacities can be obtained by multiplying the actual allowable concrete bearing stress by the respective bearing areas provided, but should not exceed the capacities listed in this table. Other concrete design checks including shear, bending, and punching of the supported structure are also project specific and shall be the responsibility of the project engineer.

© 2024 Supportworks®
All Rights Reserved

HP288NCBE Bracket Specifications & Capacities when used with the HP288 Helical Pile System

Cap Plate Material:
¾" x 6.00" square
ASTM A36

Bracket Hardware[5]:
½" square bar stock with tapped hole and Ø¼" retention bolt

Bracket Finish:
Available plain or hot-dip galvanized[2]

Concrete Bearing Area[6] (Compression) = 36.0 in²
Concrete Bearing Area[6] (Tension) = N/A

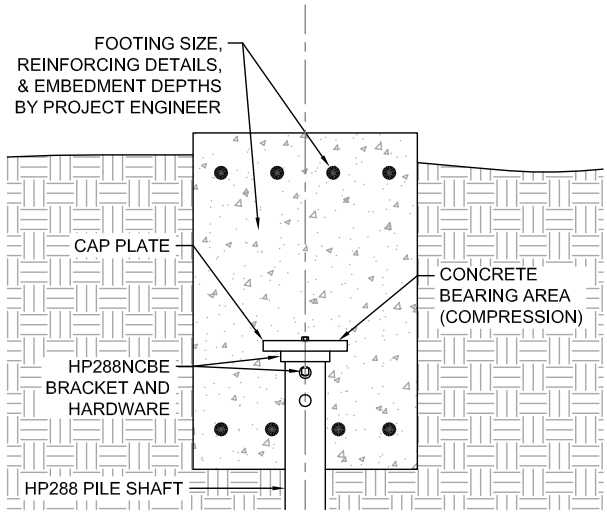

	Allowable Bracket Capacity[4] R_n/Ω			
	Compression[3] (kips)	Concrete Bearing[6] (ksi)	Tension (kips)	Concrete Bearing[6] (ksi)
Plain	64.0	1.78	0	0
Plain Corroded[1]	57.5	1.62	0	0
Galvanized Corroded[1,2]	62.1	1.73	0	0

(1) Corroded capacities include a 50-year scheduled sacrificial loss in thickness per ICC-ES AC358.

(2) Hot-dip galvanized coating in accordance with ASTM A123.

(3) Allowable compression capacities consider continuous lateral soil confinement in soils with SPT N-values ≥ 4. Piles with exposed unbraced lengths or piles placed in weaker or fluid soils should be evaluated on a case-by-case basis by the project engineer.

(4) Listed capacities include limiting mechanical capacities of the shaft when the shaft and bracket are combined as a system. System capacity should also not exceed the installed allowable torque-correlated soil capacity (See Shaft Specifications & Capacities).

(5) Supplied bracket hardware does not contribute to the system strength and is only intended to immobilize the bracket. Other methods, such as tack welds, may be substituted to maintain firm contact between the cap plate and pile shaft throughout construction and concrete placement at the discretion of the project engineer.

(6) Concrete bearing values provided are the uniform bearing stresses required to achieve the full corresponding bracket capacity. Allowable concrete bearing is a function of several project specific variables including depth of embedment, edge distance, and concrete compressive strength (f'_c). When allowable concrete bearing stresses are lower than these values, corresponding bracket capacities can be obtained by multiplying the actual allowable concrete bearing stress by the respective bearing areas provided, but should not exceed the capacities listed in this table. Other concrete design checks including shear, bending, and punching of the supported structure are also project specific and shall be the responsibility of the project engineer.

© 2024 Supportworks®
All Rights Reserved

HP288NCBE8 Bracket Specifications & Capacities when used with the HP288 Helical Pile System

Cap Plate Material:
¾" x 8.00" square
ASTM A36

Bracket Hardware[5]:
½" square bar stock with tapped hole and Ø¼" retention bolt

Bracket Finish:
Available plain or hot-dip galvanized[2]

Concrete Bearing Area[6] (Compression) = 64.0 in²
Concrete Bearing Area[6] (Tension) = N/A

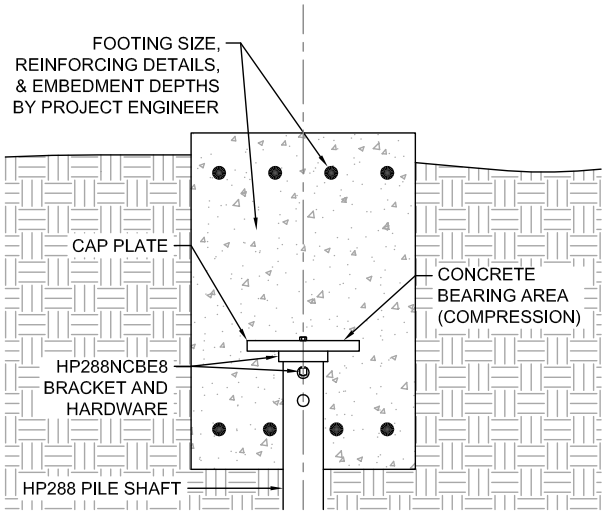

	Allowable Bracket Capacity[4] R_n/Ω			
	Compression[3] (kips)	**Concrete Bearing[6] (ksi)**	**Tension (kips)**	**Concrete Bearing[6] (ksi)**
Plain	47.9	0.75	0	0
Plain Corroded[1]	43.1	0.68	0	0
Galvanized Corroded[1,2]	46.6	0.73	0	0

(1) Corroded capacities include a 50-year scheduled sacrificial loss in thickness per ICC-ES AC358.

(2) Hot-dip galvanized coating in accordance with ASTM A123.

(3) Allowable compression capacities consider continuous lateral soil confinement in soils with SPT N-values ≥ 4. Piles with exposed unbraced lengths or piles placed in weaker or fluid soils should be evaluated on a case-by-case basis by the project engineer.

(4) Listed capacities include limiting mechanical capacities of the shaft when the shaft and bracket are combined as a system. System capacity should also not exceed the installed allowable torque-correlated soil capacity (See Shaft Specifications & Capacities).

(5) Supplied bracket hardware does not contribute to the system strength and is only intended to immobilize the bracket. Other methods, such as tack welds, may be substituted to maintain firm contact between the cap plate and pile shaft throughout construction and concrete placement at the discretion of the project engineer.

(6) Concrete bearing values provided are the uniform bearing stresses required to achieve the full corresponding bracket capacity. Allowable concrete bearing is a function of several project specific variables including depth of embedment, edge distance, and concrete compressive strength (f'_c). When allowable concrete bearing stresses are lower than these values, corresponding bracket capacities can be obtained by multiplying the actual allowable concrete bearing stress by the respective bearing areas provided, but should not exceed the capacities listed in this table. Other concrete design checks including shear, bending, and punching of the supported structure are also project specific and shall be the responsibility of the project engineer.

© 2024 Supportworks®
All Rights Reserved

FS288BL2 Bracket Specifications & Capacities when used with the HP288 Helical Pile System

Bracket:
Weldment manufactured from ¼", 5⁄16", and ⅜"
ASTM A572 Grade 50 plate

External Sleeve:
Ø3.500" x 0.216" wall x 30" long with
trumpet flare at one end
ASTM A500 Grade B or C
Yield strength = 50 ksi (min)
Tensile strength = 62 ksi (min)

Cap Plate:
1" x 4.00" x 8.25" ASTM A572 Grade 65

Bracket Hardware(3):
(2) - Ø¾" x 16" long all-thread rod Grade B7
Tensile strength = 125 ksi (min)
Electrozinc plated per ASTM B633

Bracket Finish:
Available plain or hot-dip galvanized(2)

	Allowable Bracket Capacity(4,5,6,7) R_n/Ω
	(kips)
Plain	27.7
Plain Corroded(1)	24.0
Galvanized Corroded(1,2)	26.8

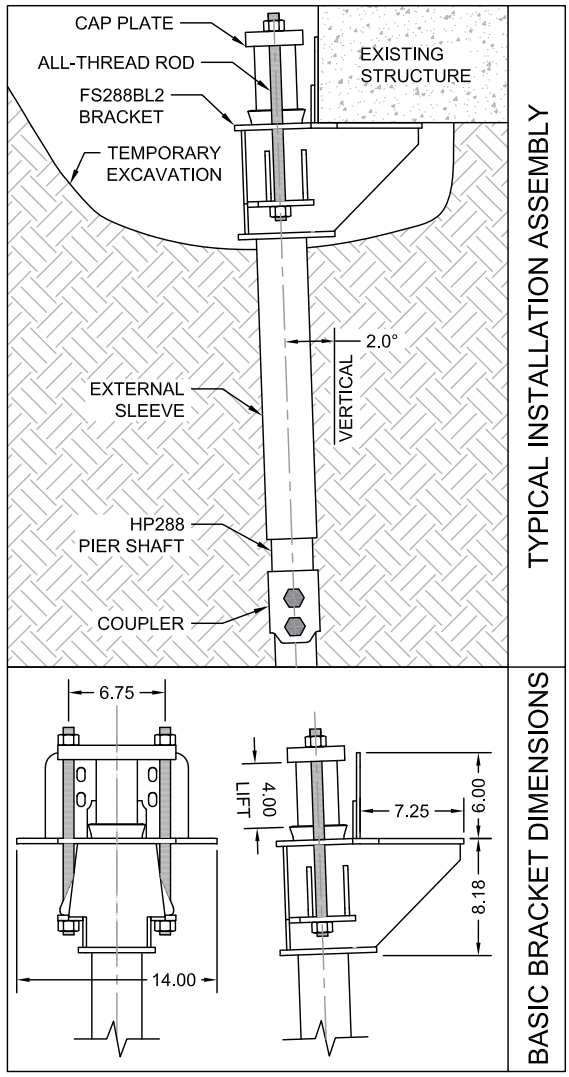

(1) Corroded capacities include a 50-year scheduled sacrificial loss in thickness per ICC-ES AC358.

(2) Hot-dip galvanized coating in accordance with ASTM A123.

(3) Optional hardware utilizes similar sized contour (coil) thread made from AISI 1045, tensile strength = 120 ksi. Slightly lower tensile strength material does not govern the listed capacities.

(4) Brackets shall be used for support of structures that are considered to be fixed from translation. Structures that are not fixed from translation shall be braced in some manner prior to installing retrofit bracket systems.

(5) Allowable capacities consider continuous lateral soil confinement in soils with SPT N-values ≥ 4. Piles with exposed unbraced lengths or piles placed in weaker or fluid soils should be evaluated on a case-by-case basis by the project engineer.

(6) Concrete bearing assumes a minimum compressive strength (f'_c) of 2,500 psi. Local concrete bending and other local design checks should be evaluated on a case-by-case basis by the project engineer.

(7) Listed allowable capacities are for the specific shaft/bracket combination shown. System capacity should also not exceed the installed torque-correlated soil capacity (See Shaft Specifications & Capacities).

© 2024 Supportworks®
All Rights Reserved

FS288BL2V Bracket Specifications & Capacities when used with the HP288 Helical Pile System

Bracket:
Weldment manufactured from ¼", 5⁄16", and ⅜"
ASTM A572 Grade 50 plate

External Sleeve:
Ø3.500" x 0.216" wall x 30" long with
trumpet flare at one end
ASTM A500 Grade B or C
Yield strength = 50 ksi (min)
Tensile strength = 62 ksi (min)

Cap Plate:
1" x 4.00" x 8.25" ASTM A572 Grade 65

Bracket Hardware(3):
(2) - Ø¾" x 16" long all-thread rod Grade B7
Tensile strength = 125 ksi (min)
Electrozinc plated per ASTM B633

Bracket Finish:
Available plain or hot-dip galvanized(2)

	Allowable Bracket Capacity(4,5,6,7) R_n/Ω (kips)
Plain	27.7
Plain Corroded(1)	24.0
Galvanized Corroded(1,2)	26.8

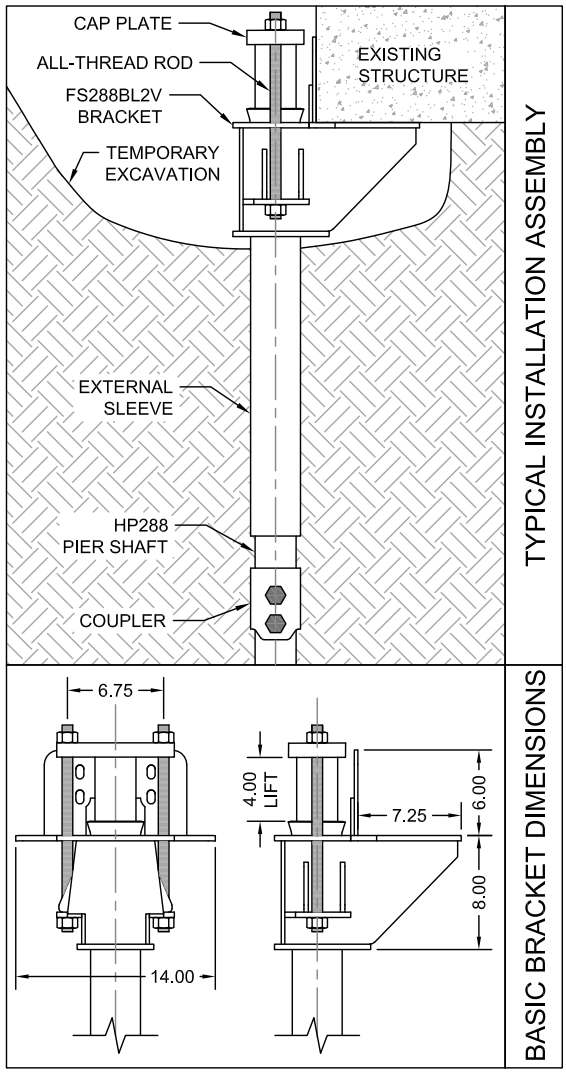

(1) Corroded capacities include a 50-year scheduled sacrificial loss in thickness per ICC-ES AC358.

(2) Hot-dip galvanized coating in accordance with ASTM A123.

(3) Optional hardware utilizes similar sized contour (coil) thread made from AISI 1045, tensile strength = 120 ksi. Slightly lower tensile strength material does not govern the listed capacities.

(4) Brackets shall be used for support of structures that are considered to be fixed from translation. Structures that are not fixed from translation shall be braced in some manner prior to installing retrofit bracket systems.

(5) Allowable capacities consider continuous lateral soil confinement in soils with SPT N-values ≥ 4. Piles with exposed unbraced lengths or piles placed in weaker or fluid soils should be evaluated on a case-by-case basis by the project engineer.

(6) Concrete bearing assumes a minimum compressive strength (f'_c) of 2,500 psi. Local concrete bending and other local design checks should be evaluated on a case-by-case basis by the project engineer.

(7) Listed allowable capacities are for the specific shaft/bracket combination shown. System capacity should also not exceed the installed torque-correlated soil capacity (See Shaft Specifications & Capacities).

© 2024 Supportworks®
All Rights Reserved

HP288B2 Bracket Specifications & Capacities when used with the HP288 Helical Pile System

Bracket:
Weldment manufactured from ⅜"
ASTM A36 plate

Integrated External Sleeve:
Ø3.500" x 0.216" wall x 20" long
ASTM A500 Grade B or C
Yield strength = 50 ksi (min)
Tensile strength = 62 ksi (min)

Cap Plate:
1" x 4.00" x 8.25" ASTM A572 Grade 65

Bracket Hardware[3]:
(2) - Ø¾" x 16" long all-thread rod Grade B7
Tensile strength = 125 ksi (min)
Electrozinc plated per ASTM B633

Bracket Finish:
Available plain or hot-dip galvanized[2]

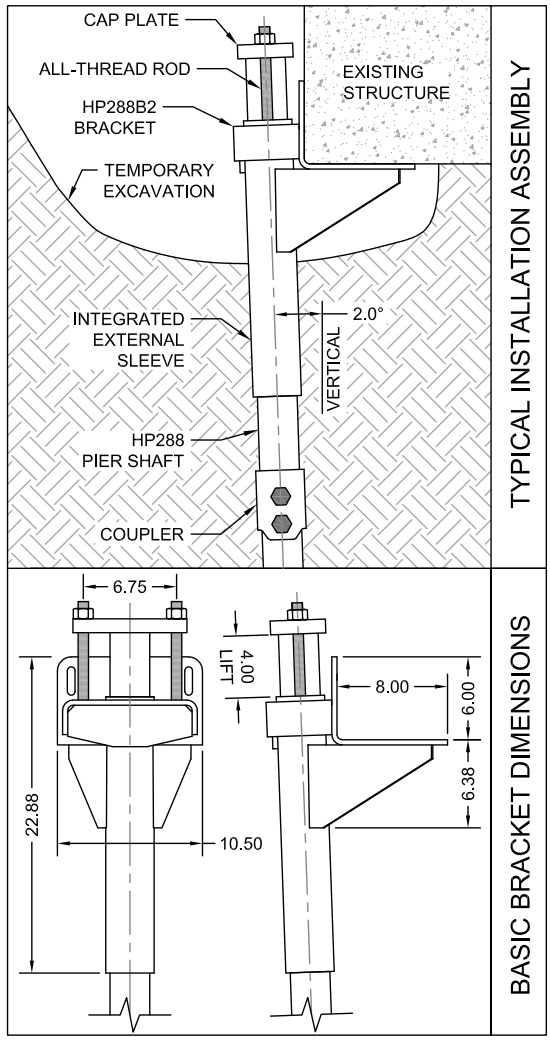

	Allowable Bracket Capacity[4,5,6,7] R_n/Ω
	(kips)
Plain	28.8
Plain Corroded[1]	24.9
Galvanized Corroded[1,2]	27.9

(1) Corroded capacities include a 50-year scheduled sacrificial loss in thickness per ICC-ES AC358.

(2) Hot-dip galvanized coating in accordance with ASTM A123.

(3) Optional hardware utilizes similar sized contour (coil) thread made from AISI 1045, tensile strength = 120 ksi. Slightly lower tensile strength material does not govern the listed capacities.

(4) Brackets shall be used for support of structures that are considered to be fixed from translation. Structures that are not fixed from translation shall be braced in some manner prior to installing retrofit bracket systems.

(5) Allowable capacities consider continuous lateral soil confinement in soils with SPT N-values ≥ 4. Piles with exposed unbraced lengths or piles placed in weaker or fluid soils should be evaluated on a case-by-case basis by the project engineer.

(6) Concrete bearing assumes a minimum compressive strength (f'_c) of 2,500 psi. Local concrete bending and other local design checks should be evaluated on a case-by-case basis by the project engineer.

(7) Listed allowable capacities are for the specific shaft/bracket combination shown. System capacity should also not exceed the installed torque-correlated soil capacity (See Shaft Specifications & Capacities).

© 2024 Supportworks®
All Rights Reserved

HP288BUL2 Bracket Specifications & Capacities when used with the HP288 Helical Pile System

Bracket:
Weldment manufactured from 5⁄16" and ½"
ASTM A572 Grade 50 plates

Integrated External Sleeve:
Ø3.500" x 0.216" wall x 20" long
ASTM A500 Grade B or C
Yield strength = 50 ksi (min)
Tensile strength = 62 ksi (min)

Cap Plate:
1" x 4.00" x 8.25" ASTM A572 Grade 65

Bracket Hardware[3]:
(2) - Ø¾" x 16" long all-thread rod Grade B7
Tensile strength = 125 ksi (min)
Electrozinc plated per ASTM B633

Bracket Finish:
Available plain or hot-dip galvanized[2]

	Allowable Bracket Capacity[4,5,6,7] R_n/Ω
	(kips)
Plain	23.0
Plain Corroded[1]	20.0
Galvanized Corroded[1,2]	22.2

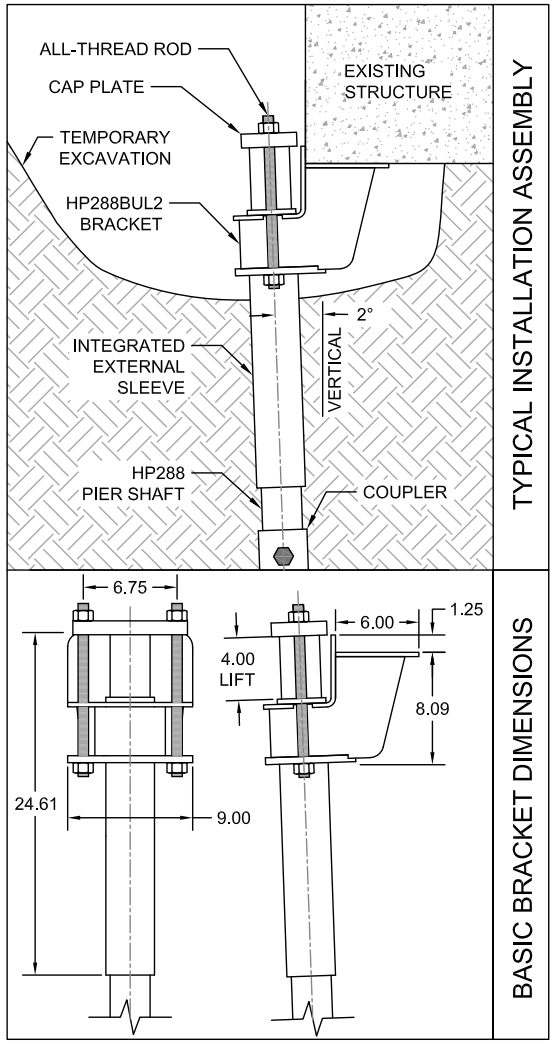

(1) Corroded capacities include a 50-year scheduled sacrificial loss in thickness per ICC-ES AC358.

(2) Hot-dip galvanized coating in accordance with ASTM A123.

(3) Optional hardware utilizes similar sized contour (coil) thread made from AISI 1045, tensile strength = 120 ksi. Slightly lower tensile strength material does not govern the listed capacities.

(4) Brackets shall be used for support of structures that are considered to be fixed from translation. Structures that are not fixed from translation shall be braced in some manner prior to installing retrofit bracket systems.

(5) Allowable capacities consider continuous lateral soil confinement in soils with SPT N-values ≥ 4. Piles with exposed unbraced lengths or piles placed in weaker or fluid soils should be evaluated on a case-by-case basis by the project engineer.

(6) Concrete bearing assumes a minimum compressive strength (f'_c) of 2,500 psi. Local concrete bending and other local design checks should be evaluated on a case-by-case basis by the project engineer.

(7) Listed allowable capacities are for the specific shaft/bracket combination shown. System capacity should also not exceed the installed torque-correlated soil capacity (See Shaft Specifications & Capacities).

© 2024 Supportworks®
All Rights Reserved

HP288 Helix Plate Net Bearing Areas

H-Style Plates

Plate Diameter (inches)	Area (ft^2)
6	0.15
8	0.30
10	0.50
12	0.74
14	1.02
16	1.35

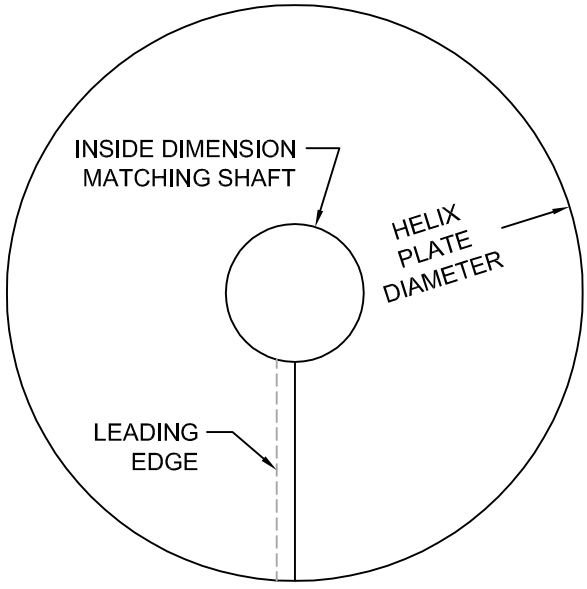

V-Style Plates(1)

Plate Diameter (inches)	Area (ft^2)
6	0.14
8	0.28
10	0.45
12	0.66
14	0.91
16	1.19

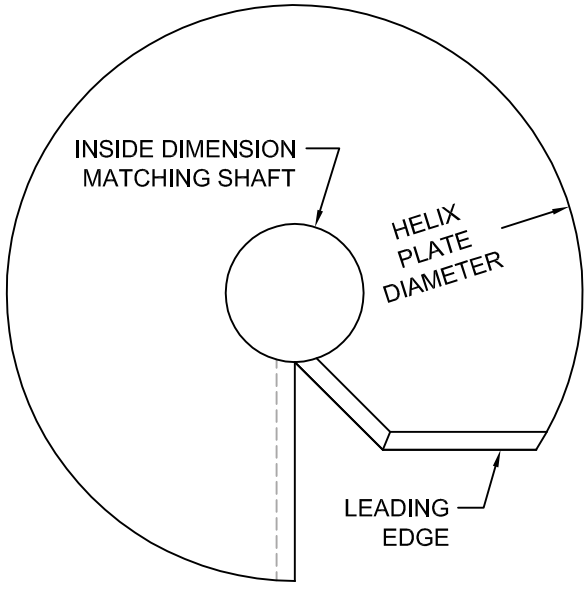

(1) V-Style plates feature a special cut on the leading edge (or cutting edge). This edge is cut at two successive 45° angles to roughly simulate a spiral. This is in addition to the 45° bevel on the leading edge which is a standard feature for helix plates of both styles. V-Style plates are appropriate for use in applications where rocky or rubble-filled soils are anticipated, or where very dense layers need to be penetrated.

© 2024 Supportworks®
All Rights Reserved

HP350

© 2024 Supportworks®
All Rights Reserved

HP350 Shaft Specifications & Capacities

Shaft Material:
Ø3.500" x 0.340" wall
ASTM A500 Grade B or C
Yield strength = 65 ksi (min)
Tensile strength = 75 ksi (min)

Shaft Coupler Material:
Ø4.250" x 0.344" wall
ASTM A513 Type 5 Grade 1026
Yield strength = 70 ksi (min)
Tensile strength = 80 ksi (min)

Helix Plates:
ASTM A572 Grade 50
⅜" thick (standard)
½" thick (available)
Helix plate geometry conforming to ICC-ES AC358

Shaft Coupling Hardware:
(4) - Ø1" Grade 5 bolts with nuts
Electrozinc plated per ASTM B633

Surface Finish of Shaft Segments:
Available plain or hot-dip galvanized(2)

Nominal Thickness	**0.340 (in)**
Design Thickness(3)	**0.316 (in)**

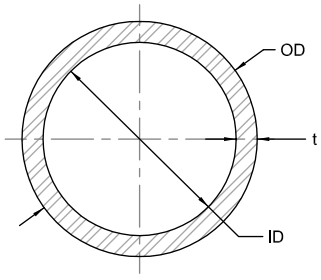

	Plain	Plain Corroded(1)	Galvanized Corroded(1,2)
OD (in)	3.500	3.464	3.490
t (in)	0.316	0.280	0.306
ID (in)	2.868	2.904	2.876
A (in²)	3.16	2.80	3.06
I (in⁴)	4.05	3.58	3.91
S (in³)	2.31	2.07	2.24
Z (in³)	3.21	2.85	3.11
r (in)	1.13	1.13	1.13
Shaft Max Allowable Compression Capacity(4,5) P_n/Ω (kips)	**118.5**	**105.0**	**114.8**
Shaft Max Allowable Tension Capacity(5) P_n/Ω (kips)	**73.0**	**62.8**	**69.1**

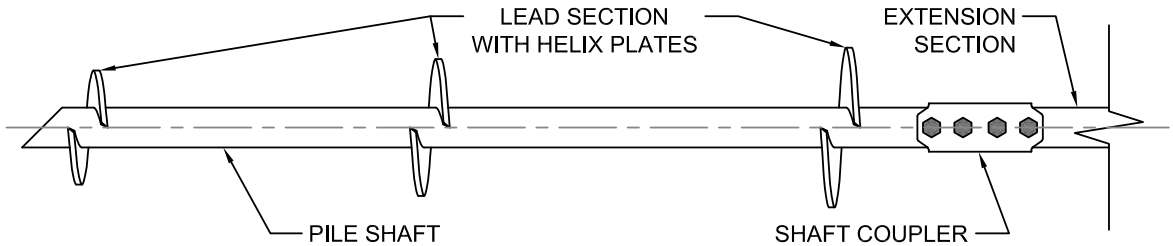

Default Torque Correlation Factor(6) K_t = 7 (ft^{-1})	**Maximum Ultimate Soil Capacity(7) Q_u = 122.5 (kips)**
Maximum Installation Torque T = 17,500 (ft-lb)	**Maximum Allowable Soil Capacity(7) Q_a = 61.3 (kips) FOS = 2.0**

(1) Corroded properties and capacities include a 50-year scheduled sacrificial loss in thickness per ICC-ES AC358.

(2) Hot-dip galvanized coating in accordance with ASTM A123.

(3) Design thickness for HSS and Pipe based on 93% of nominal thickness per AISC.

(4) Allowable mechanical compression capacities consider continuous lateral soil confinement in soils with SPT N-values ≥ 4. Piles with exposed unbraced lengths or piles placed in weaker or fluid soils should be evaluated on a case-by-case basis by the project engineer.

(5) Listed mechanical capacities are for the shaft and coupled connections only. System capacity should also not exceed the installed allowable torque-correlated soil capacity or the allowable capacity of the respective bracket (see additional bracket tables).

(6) Default K_t factor is consistent with that listed in ICC-ES AC358. This value is generally conservative. Site-specific K_t factors can be determined for a given project with full-scale load testing.

(7) Soil capacities listed are at maximum installation torque. Ultimate soil capacity is based on the equation $Q_u = K_t \times T$. Allowable soil capacity is obtained by dividing the ultimate capacity by an appropriate factor of safety ($Q_a = Q_u$ / FOS). Although a factor of safety of 2.0 is commonly used, a higher or lower factor of safety may be considered at the discretion of the helical pile designer or as dictated by local code requirements. System capacity should also not exceed the mechanical capacity of the shaft or those listed in the respective bracket capacity tables.

© 2024 Supportworks®
All Rights Reserved

HP350NCB Bracket Specifications & Capacities when used with the HP350 Helical Pile System

Bracket Sleeve Material:
Ø4.250" x 0.313" wall
ASTM A513 Type 5 Grade 1026
Yield strength = 70 ksi (min)
Tensile strength = 80 ksi (min)

Cap Plate Material:
¾" x 7.00" square
ASTM A36

Bracket Hardware:
(2) - Ø1" Grade 5 bolts with nuts
Electrozinc plated per ASTM B633

Bracket Finish:
Available plain or hot-dip galvanized[2]

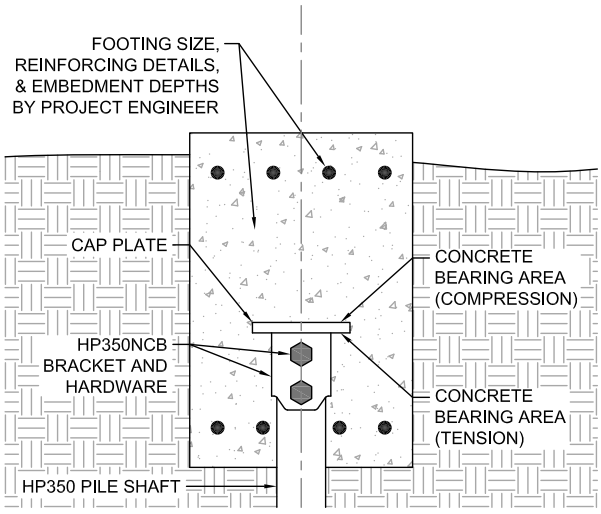

Concrete Bearing Area[6] (Compression) = 49.0 in²
Concrete Bearing Area[6] (Tension) = 34.8 in²

		Allowable Bracket Capacity[4] R_n/Ω			
		Compression[3] (kips)	Concrete Bearing[6] (ksi)	Tension (kips)	Concrete Bearing[6] (ksi)
2 Bolts	Plain	67.6	1.38	64.2	1.85
	Plain Corroded[1]	60.8	1.25	58.5	1.70
	Galvanized Corroded[1,2]	65.7	1.34	62.7	1.81
1 Bolt	Plain	67.6	1.38	20.2	0.58
	Plain Corroded[1]	60.8	1.25	17.0	0.49
	Galvanized Corroded[1,2]	65.7	1.34	19.3	0.56
0 Bolts[5]	Plain	67.6	1.38	0	0
	Plain Corroded[1]	60.8	1.25	0	0
	Galvanized Corroded[1,2]	65.7	1.34	0	0

(1) Corroded capacities include a 50-year scheduled sacrificial loss in thickness per ICC-ES AC358.

(2) Hot-dip galvanized coating in accordance with ASTM A123.

(3) Allowable compression capacities consider continuous lateral soil confinement in soils with SPT N-values ≥ 4. Piles with exposed unbraced lengths or piles placed in weaker or fluid soils should be evaluated on a case-by-case basis by the project engineer.

(4) Listed capacities include limiting mechanical capacities of the shaft when the shaft and bracket are combined as a system. System capacity should also not exceed the installed allowable torque-correlated soil capacity (See Shaft Specifications & Capacities).

(5) Applications utilizing no bolts should either be tack welded or utilize some other mechanism to immobilize the bracket and maintain firm contact between the cap plate and pile shaft throughout construction and concrete placement.

(6) Concrete bearing values provided are the uniform bearing stresses required to achieve the full corresponding bracket capacity. Allowable concrete bearing is a function of several project specific variables including depth of embedment, edge distance, and concrete compressive strength (f'_c). When allowable concrete bearing stresses are lower than these values, corresponding bracket capacities can be obtained by multiplying the actual allowable concrete bearing stress by the respective bearing areas provided, but should not exceed the capacities listed in this table. Other concrete design checks including shear, bending, and punching of the supported structure are also project specific and shall be the responsibility of the project engineer.

© 2024 Supportworks®
All Rights Reserved

HP350NCB8 Bracket Specifications & Capacities when used with the HP350 Helical Pile System

Bracket Sleeve Material:
Ø4.250" x 0.313" wall
ASTM A513 Type 5 Grade 1026
Yield strength = 70 ksi (min)
Tensile strength = 80 ksi (min)

Cap Plate Material:
¾" x 8.00" square
ASTM A36

Bracket Hardware:
(2) - Ø1" Grade 5 bolts with nuts
Electrozinc plated per ASTM B633

Bracket Finish:
Available plain or hot-dip galvanized(2)

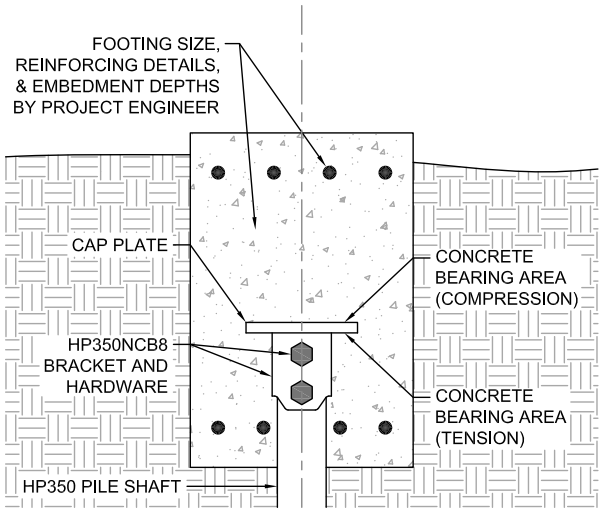

Concrete Bearing Area(6) (Compression) = 64.0 in²
Concrete Bearing Area(6) (Tension) = 49.8 in²

		Allowable Bracket Capacity(4) R_n/Ω			
		Compression(3) (kips)	Concrete Bearing(6) (ksi)	Tension (kips)	Concrete Bearing(6) (ksi)
2 Bolts	Plain	57.6	0.90	57.3	1.15
	Plain Corroded(1)	51.9	0.82	51.5	1.05
	Galvanized Corroded(1,2)	56.0	0.88	55.6	1.12
1 Bolt	Plain	57.6	0.90	20.2	0.41
	Plain Corroded(1)	51.9	0.82	17.0	0.34
	Galvanized Corroded(1,2)	56.0	0.88	19.3	0.39
0 Bolts(5)	Plain	57.6	0.90	0	0
	Plain Corroded(1)	51.9	0.82	0	0
	Galvanized Corroded(1,2)	56.0	0.88	0	0

(1) Corroded capacities include a 50-year scheduled sacrificial loss in thickness per ICC-ES AC358.

(2) Hot-dip galvanized coating in accordance with ASTM A123.

(3) Allowable compression capacities consider continuous lateral soil confinement in soils with SPT N-values ≥ 4. Piles with exposed unbraced lengths or piles placed in weaker or fluid soils should be evaluated on a case-by-case basis by the project engineer.

(4) Listed capacities include limiting mechanical capacities of the shaft when the shaft and bracket are combined as a system. System capacity should also not exceed the installed allowable torque-correlated soil capacity (See Shaft Specifications & Capacities).

(5) Applications utilizing no bolts should either be tack welded or utilize some other mechanism to immobilize the bracket and maintain firm contact between the cap plate and pile shaft throughout construction and concrete placement.

(6) Concrete bearing values provided are the uniform bearing stresses required to achieve the full corresponding bracket capacity. Allowable concrete bearing is a function of several project specific variables including depth of embedment, edge distance, and concrete compressive strength (f'_c). When allowable concrete bearing stresses are lower than these values, corresponding bracket capacities can be obtained by multiplying the actual allowable concrete bearing stress by the respective bearing areas provided, but should not exceed the capacities listed in this table. Other concrete design checks including shear, bending, and punching of the supported structure are also project specific and shall be the responsibility of the project engineer.

© 2024 Supportworks®
All Rights Reserved

HP350NCBE Bracket Specifications & Capacities when used with the HP350 Helical Pile System

Cap Plate Material:
¾" x 7.00" square
ASTM A36

Bracket Hardware[5]:
½" square bar stock with tapped hole and Ø¼" retention bolt

Bracket Finish:
Available plain or hot-dip galvanized[2]

Concrete Bearing Area[6] (Compression) = 49.0 in²
Concrete Bearing Area[6] (Tension) = N/A

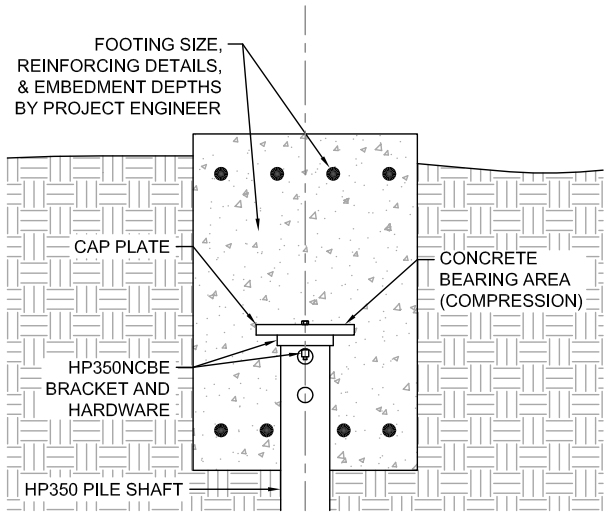

	Allowable Bracket Capacity[4] R_n/Ω			
	Compression[3] (kips)	**Concrete Bearing[6] (ksi)**	**Tension (kips)**	**Concrete Bearing[6] (ksi)**
Plain	67.6	1.38	0	0
Plain Corroded[1]	60.8	1.25	0	0
Galvanized Corroded[1,2]	65.7	1.34	0	0

(1) Corroded capacities include a 50-year scheduled sacrificial loss in thickness per ICC-ES AC358.

(2) Hot-dip galvanized coating in accordance with ASTM A123.

(3) Allowable compression capacities consider continuous lateral soil confinement in soils with SPT N-values ≥ 4. Piles with exposed unbraced lengths or piles placed in weaker or fluid soils should be evaluated on a case-by-case basis by the project engineer.

(4) Listed capacities include limiting mechanical capacities of the shaft when the shaft and bracket are combined as a system. System capacity should also not exceed the installed allowable torque-correlated soil capacity (See Shaft Specifications & Capacities).

(5) Supplied bracket hardware does not contribute to the system strength and is only intended to immobilize the bracket. Other methods, such as tack welds, may be substituted to maintain firm contact between the cap plate and pile shaft throughout construction and concrete placement at the discretion of the project engineer.

(6) Concrete bearing values provided are the uniform bearing stresses required to achieve the full corresponding bracket capacity. Allowable concrete bearing is a function of several project specific variables including depth of embedment, edge distance, and concrete compressive strength (f'_c). When allowable concrete bearing stresses are lower than these values, corresponding bracket capacities can be obtained by multiplying the actual allowable concrete bearing stress by the respective bearing areas provided, but should not exceed the capacities listed in this table. Other concrete design checks including shear, bending, and punching of the supported structure are also project specific and shall be the responsibility of the project engineer.

© 2024 Supportworks®
All Rights Reserved

HP350NCBE8 Bracket Specifications & Capacities when used with the HP350 Helical Pile System

Cap Plate Material:
¾" x 8.00" square
ASTM A36

Bracket Hardware[5]:
½" square bar stock with tapped hole and Ø¼" retention bolt

Bracket Finish:
Available plain or hot-dip galvanized[2]

Concrete Bearing Area[6] (Compression) = 64.0 in²
Concrete Bearing Area[6] (Tension) = N/A

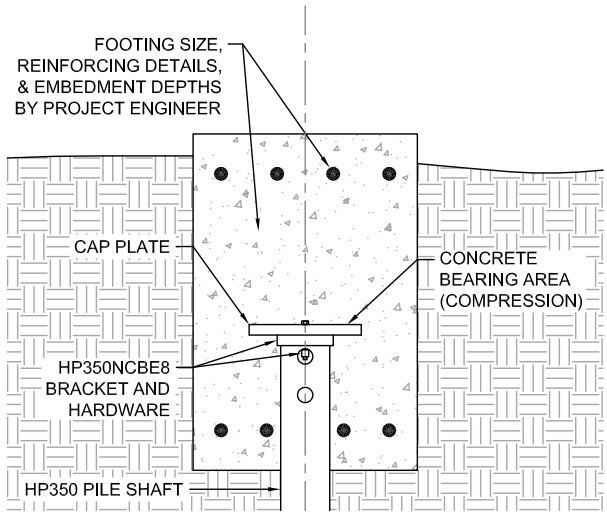

	Allowable Bracket Capacity[4] R_n/Ω			
	Compression[3] (kips)	Concrete Bearing[6] (ksi)	Tension (kips)	Concrete Bearing[6] (ksi)
Plain	57.6	0.90	0	0
Plain Corroded[1]	51.9	0.82	0	0
Galvanized Corroded[1,2]	56.0	0.88	0	0

(1) Corroded capacities include a 50-year scheduled sacrificial loss in thickness per ICC-ES AC358.

(2) Hot-dip galvanized coating in accordance with ASTM A123.

(3) Allowable compression capacities consider continuous lateral soil confinement in soils with SPT N-values ≥ 4. Piles with exposed unbraced lengths or piles placed in weaker or fluid soils should be evaluated on a case-by-case basis by the project engineer.

(4) Listed capacities include limiting mechanical capacities of the shaft when the shaft and bracket are combined as a system. System capacity should also not exceed the installed allowable torque-correlated soil capacity (See Shaft Specifications & Capacities).

(5) Supplied bracket hardware does not contribute to the system strength and is only intended to immobilize the bracket. Other methods, such as tack welds, may be substituted to maintain firm contact between the cap plate and pile shaft throughout construction and concrete placement at the discretion of the project engineer.

(6) Concrete bearing values provided are the uniform bearing stresses required to achieve the full corresponding bracket capacity. Allowable concrete bearing is a function of several project specific variables including depth of embedment, edge distance, and concrete compressive strength (f'_c). When allowable concrete bearing stresses are lower than these values, corresponding bracket capacities can be obtained by multiplying the actual allowable concrete bearing stress by the respective bearing areas provided, but should not exceed the capacities listed in this table. Other concrete design checks including shear, bending, and punching of the supported structure are also project specific and shall be the responsibility of the project engineer.

© 2024 Supportworks®
All Rights Reserved

FS350B2 Bracket Specifications & Capacities when used with the HP350 Helical Pile System

Bracket:
Weldment manufactured from ¼", ⅜", and ½" ASTM A572 Grade 50 plate and Ø4.50" x 0.337" wall AS7M A500 Grade C pipe

External Sleeve:
Ø4.000" x 0.226" wall x 30" long with trumpet flare at one end
ASTM A500 Grade B or C
Yield strength = 50 ksi (min)
Tensile strength = 62 ksi (min)

Cap Plate:
1¼" x 4.00" x 8.50" ASTM A572 Grade 50

Bracket Hardware[3]:
(2) - Ø⅞" x 24" long all-thread rod Grade B7
Tensile strength = 125 ksi (min)
Electrozinc plated per ASTM B633

Bracket Finish:
Available plain or hot-dip galvanized[2]

	Allowable Bracket Capacity[4,5,6,7] R_n/Ω
	(kips)
Plain	54.9
Plain Corroded[1]	49.2
Galvanized Corroded[1,2]	53.2

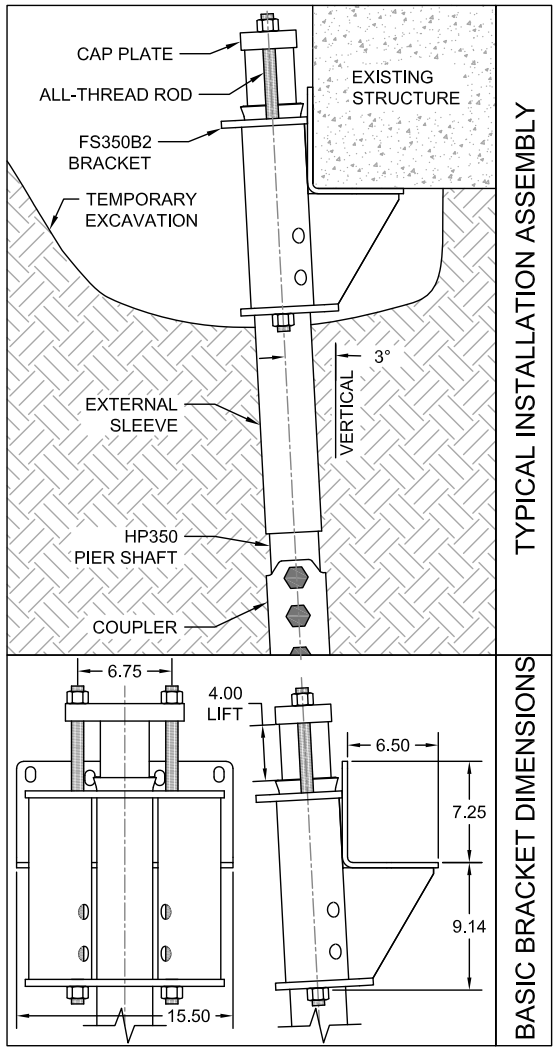

(1) Corroded capacities include a 50-year scheduled sacrificial loss in thickness per ICC-ES AC358.

(2) Hot-dip galvanized coating in accordance with ASTM A123.

(3) Optional hardware utilizes similar sized contour (coil) thread made from AISI 1045, tensile strength = 120 ksi. Slightly lower tensile strength material does not govern the listed capacities.

(4) Brackets shall be used for support of structures that are considered to be fixed from translation. Structures that are not fixed from translation shall be braced in some manner prior to installing retrofit bracket systems.

(5) Allowable capacities consider continuous lateral soil confinement in soils with SPT ≥ 4. Piles with exposed unbraced lengths or piles placed in weaker or fluid soils should be evaluated on a case-by-case basis by the project engineer.

(6) Concrete bearing assumes a minimum compressive strength (f'_c) of 2,500 psi. Local concrete bending and other local design checks should be evaluated on a case-by-case basis by the project engineer.

(7) Listed allowable capacities are for the specific shaft/bracket combination shown. System capacity should also not exceed the installed torque-correlated soil capacity (See Shaft Specifications & Capacities).

© 2024 Supportworks®
All Rights Reserved

FS350B2V Bracket Specifications & Capacities when used with the HP350 Helical Pile System

Bracket:
Weldment manufactured from ¼", ⅜", and ½"
ASTM A572 Grade 50 plate and Ø4.50" x 0.337"
wall AS7M A500 Grade C pipe

External Sleeve:
Ø4.000" x 0.226" wall x 30" long
with trumpet flare at one end
ASTM A500 Grade B or C
Yield strength = 50 ksi (min)
Tensile strength = 62 ksi (min)

Cap Plate:
1¼" x 4.00" x 8.50" ASTM A572 Grade 50

Bracket Hardware[3]:
(2) - Ø⅞" x 24" long all-thread rod Grade B7
Tensile strength = 125 ksi (min)
Electrozinc plated per ASTM B633

Bracket Finish:
Available plain or hot-dip galvanized[2]

	Allowable Bracket Capacity[4,5,6,7] R_n/Ω
	(kips)
Plain	54.9
Plain Corroded[1]	49.2
Galvanized Corroded[1,2]	53.2

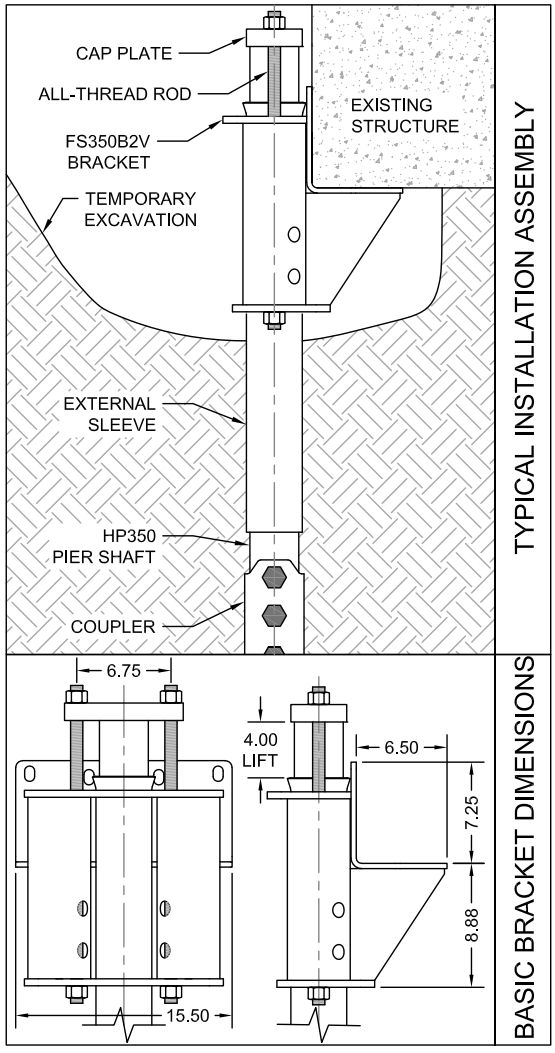

(1) Corroded capacities include a 50-year scheduled sacrificial loss in thickness per ICC-ES AC358.

(2) Hot-dip galvanized coating in accordance with ASTM A123.

(3) Optional hardware utilizes similar sized contour (coil) thread made from AISI 1045, tensile strength = 120 ksi. Slightly lower tensile strength material does not govern the listed capacities.

(4) Brackets shall be used for support of structures that are considered to be fixed from translation. Structures that are not fixed from translation shall be braced in some manner prior to installing retrofit bracket systems.

(5) Allowable capacities consider continuous lateral soil confinement in soils with SPT ≥ 4. Piles with exposed unbraced lengths or piles placed in weaker or fluid soils should be evaluated on a case-by-case basis by the project engineer.

(6) Concrete bearing assumes a minimum compressive strength (f'_c) of 2,500 psi. Local concrete bending and other local design checks should be evaluated on a case-by-case basis by the project engineer.

(7) Listed allowable capacities are for the specific shaft/bracket combination shown. System capacity should also not exceed the installed torque-correlated soil capacity (See Shaft Specifications & Capacities).

© 2024 Supportworks®
All Rights Reserved

HP350 Helix Plate Net Bearing Areas

H-Style Plates

Plate Diameter (inches)	Area (ft^2)
6	0.13
8	0.28
10	0.48
12	0.72
14	1.00
16	1.33

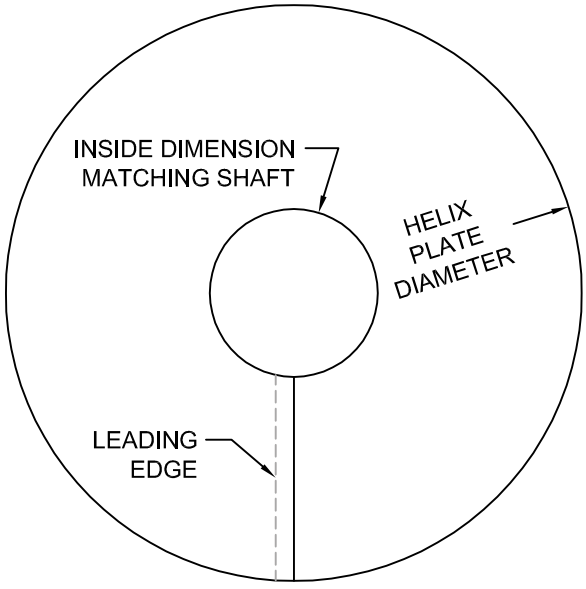

V-Style Plates(1)

Plate Diameter (inches)	Area (ft^2)
6*	0.12
8	0.26
10	0.43
12	0.65
14	0.89
16	1.18

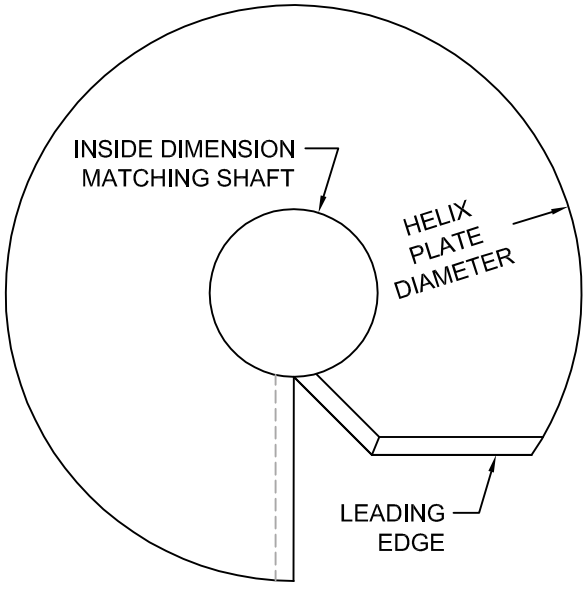

(1) V-Style plates feature a special cut on the leading edge (or cutting edge). This edge is cut at two successive 45° angles to roughly simulate a spiral. This is in addition to the 45° bevel on the leading edge which is a standard feature for helix plates of both styles. V-Style plates are appropriate for use in applications where rocky or rubble-filled soils are anticipated, or where very dense layers need to be penetrated. Some smaller plate diameters indicated by an asterisk (*), are not typically available in a V-Style.

© 2024 Supportworks®
All Rights Reserved

HP450

© 2024 Supportworks®
All Rights Reserved

HP450 Shaft Specifications & Capacities

Shaft Material:
Ø4.500" x 0.337" wall
ASTM A500 Grade B or C
Yield strength = 50 ksi (min)
Tensile strength = 60 ksi (min)

Shaft Coupler Material:
Ø5.250" x 0.313" wall
ASTM A513 Type 5 Grade 1026
Yield strength = 70 ksi (min)
Tensile strength = 80 ksi (min)

Helix Plates:
ASTM A572 Grade 50
½" thick (standard)
⅝" thick (available)
Helix plate geometry conforming to ICC-ES AC358

Shaft Coupling Hardware:
(4) - Ø1⅛" Grade 5 bolts with nuts
Electrozinc plated per ASTM B633

Surface Finish of Shaft Segments:
Available plain or hot-dip galvanized(2)

Nominal Thickness	**0.337 (in)**
Design Thickness(3)	**0.313 (in)**

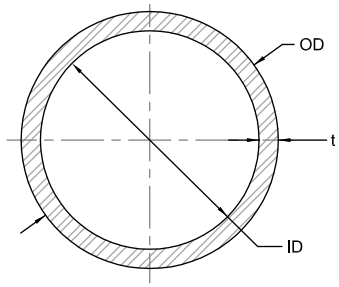

	Plain	Plain Corroded(1)	Galvanized Corroded(1,2)
OD (in)	4.500	4.464	4.490
t (in)	0.313	0.277	0.303
ID (in)	3.874	3.910	3.884
A (in²)	4.12	3.64	3.99
I (in⁴)	9.07	8.02	8.78
S (in³)	4.03	3.59	3.91
Z (in³)	5.50	4.86	5.32
r (in)	1.48	1.48	1.48
Shaft Max Allowable Compression Capacity(4,5) P_n/Ω (kips)	**123.3**	**109.1**	**119.3**
Shaft Max Allowable Tension Capacity(5) P_n/Ω (kips)	**61.1**	**52.6**	**58.7**

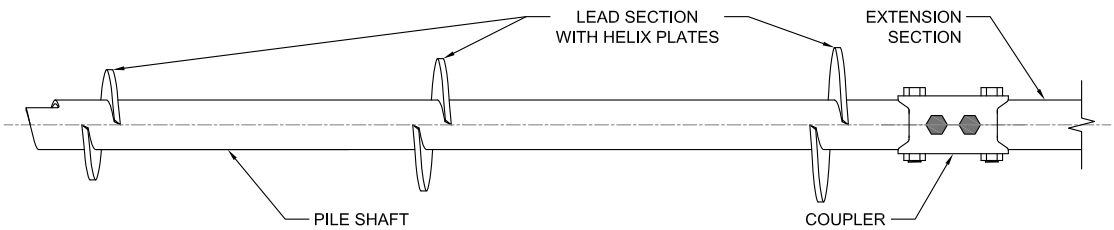

Torque Correlation Factor(6) K_t = 5.5 (ft^{-1})	**Maximum Ultimate Soil Capacity(7) Q_u = 121.0 (kips)**
Maximum Installation Torque T = 22,000 (ft-lb)	**Maximum Allowable Soil Capacity(7) Q_a = 60.5 (kips) FOS = 2.0**

(1) Corroded properties and capacities include a 50-year scheduled sacrificial loss in thickness per ICC-ES AC358.

(2) Hot-dip galvanized coating in accordance with ASTM A123.

(3) Indicated design thickness is conservatively based on 93% of nominal thickness. Measured thickness is verified prior to fabrication.

(4) Allowable mechanical compression capacities consider continuous lateral soil confinement in soils with SPT N-values ≥ 4. Piles with exposed unbraced lengths or piles placed in weaker or fluid soils should be evaluated on a case-by-case basis by the project engineer.

(5) Listed mechanical capacities are for the shaft and coupled connections only. System capacity should also not exceed the installed allowable torque-correlated soil capacity or the allowable capacity of the respective bracket (see additional bracket tables).

(6) Calculated K_t factor is in accordance with ICC-ES AC358. These values are generally conservative. Site-specific K_t factors can be determined for a given project with full-scale load testing.

(7) Soil capacities listed are at maximum installation torque. Ultimate soil capacity is based on the equation $Q_u = K_t \times T$. Allowable soil capacity is obtained by dividing the ultimate capacity by an appropriate factor of safety ($Q_a = Q_u / FOS$). Although a factor of safety of 2.0 is commonly used, a higher or lower factor of safety may be considered at the discretion of the helical pile designer or as dictated by local code requirements. System capacity should also not exceed the mechanical capacity of the shaft or those listed in the respective bracket capacity tables.

04/10/23

© 2024 Supportworks®
All Rights Reserved

HP450NCB8 Bracket Specifications & Capacities when used with the HP450 Helical Pile System

Bracket Sleeve Material:
Ø5.250" x 0.313" wall
ASTM A513 Type 5 Grade 1026
Yield strength = 70 ksi (min)
Tensile strength = 80 ksi (min)

Cap Plate Material:
¾" x 8.00" square
ASTM A572 Grade 50

Bracket Hardware:
(2) - Ø1⅛" Grade 5 bolts with nuts
Electrozinc plated per ASTM B633

Bracket Finish:
Available plain or hot-dip galvanized(2)

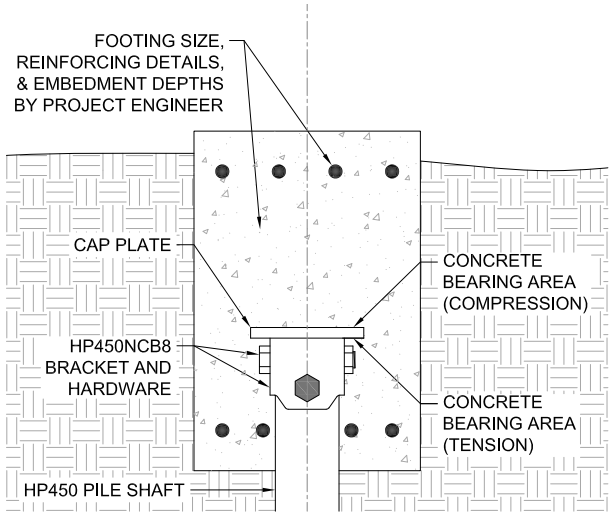

Concrete Bearing Area(6) (Compression) = 64.0 in²
Concrete Bearing Area(6) (Tension) = 42.35 in²

		Allowable Bracket Capacity(4) R_n/Ω			
		Compression(3) (kips)	Concrete Bearing(6) (ksi)	Tension (kips)	Concrete Bearing(6) (ksi)
2 Bolts	Plain	111.7	1.75	58.0	1.37
	Plain Corroded(1)	100.6	1.59	49.6	1.19
	Galvanized Corroded(1,2)	108.6	1.70	55.6	1.32
1 Bolt	Plain	111.7	1.75	18.6	0.44
	Plain Corroded(1)	100.6	1.59	15.6	0.37
	Galvanized Corroded(1,2)	108.6	1.70	17.7	0.42
0 Bolts(5)	Plain	111.7	1.75	0	0
	Plain Corroded(1)	100.6	1.59	0	0
	Galvanized Corroded(1,2)	108.6	1.70	0	0

(1) Corroded capacities include a 50-year scheduled sacrificial loss in thickness per ICC-ES AC358.

(2) Hot-dip galvanized coating in accordance with ASTM A123.

(3) Allowable compression capacities consider continuous lateral soil confinement in soils with SPT N-values ≥ 4. Piles with exposed unbraced lengths or piles placed in weaker or fluid soils should be evaluated on a case-by-case basis by the project engineer.

(4) Listed capacities include limiting mechanical capacities of the shaft when the shaft and bracket are combined as a system. System capacity should also not exceed the installed allowable torque-correlated soil capacity (See Shaft Specifications & Capacities).

(5) Applications utilizing no bolts should either be tack welded or utilize some other mechanism to immobilize the bracket and maintain firm contact between the cap plate and pile shaft throughout construction and concrete placement.

(6) Concrete bearing values provided are the uniform bearing stresses required to achieve the full corresponding bracket capacity. Allowable concrete bearing is a function of several project specific variables including depth of embedment, edge distance, and concrete compressive strength (f'_c). When allowable concrete bearing stresses are lower than these values, corresponding bracket capacities can be obtained by multiplying the actual allowable concrete bearing stress by the respective bearing areas provided, but should not exceed the capacities listed in this table. Other concrete design checks including shear, bending, and punching of the supported structure are also project specific and shall be the responsibility of the project engineer.

04/10/23

© 2024 Supportworks®
All Rights Reserved

HP450NCBE8 Bracket Specifications & Capacities when used with the HP450 Helical Pile System

Cap Plate Material:
¾" x 8.00" square ASTM A572 Grade 50

Bracket Hardware[5]:
½" square bar stock with tapped hole and Ø¼" retention bolt

Bracket Finish:
Available plain or hot-dip galvanized[2]

Concrete Bearing Area[6] (Compression) = 64.0 in²
Concrete Bearing Area[6] (Tension) = N/A

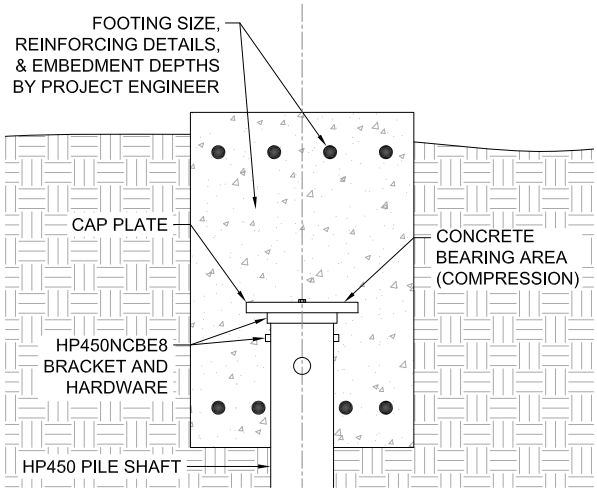

	Allowable Bracket Capacity[4] R_n/Ω			
	Compression[3] (kips)	Concrete Bearing[6] (ksi)	Tension (kips)	Concrete Bearing[6] (ksi)
Plain	111.7	1.75	0	0
Plain Corroded[1]	100.6	1.59	0	0
Galvanized Corroded[1,2]	108.6	1.70	0	0

(1) Corroded capacities include a 50-year scheduled sacrificial loss in thickness per ICC-ES AC358.

(2) Hot-dip galvanized coating in accordance with ASTM A123.

(3) Allowable compression capacities consider continuous lateral soil confinement in soils with SPT N-values ≥ 4. Piles with exposed unbraced lengths or piles placed in weaker or fluid soils should be evaluated on a case-by-case basis by the project engineer.

(4) Listed capacities include limiting mechanical capacities of the shaft when the shaft and bracket are combined as a system. System capacity should also not exceed the installed allowable torque-correlated soil capacity (See Shaft Specifications & Capacities).

(5) Supplied bracket hardware does not contribute to the system strength and is only intended to immobilize the bracket. Other methods, such as tack welds, may be substituted to maintain firm contact between the cap plate and pile shaft throughout construction and concrete placement at the discretion of the project engineer.

(6) Concrete bearing values provided are the uniform bearing stresses required to achieve the full corresponding bracket capacity. Allowable concrete bearing is a function of several project specific variables including depth of embedment, edge distance, and concrete compressive strength (f'_c). When allowable concrete bearing stresses are lower than these values, corresponding bracket capacities can be obtained by multiplying the actual allowable concrete bearing stress by the respective bearing areas provided, but should not exceed the capacities listed in this table. Other concrete design checks including shear, bending, and punching of the supported structure are also project specific and shall be the responsibility of the project engineer.

© 2024 Supportworks®
All Rights Reserved

HP450 Helix Plate Net Bearing Areas

H-Style Plates

Plate Diameter (inches)	Area (ft^2)
8	0.24
10	0.43
12	0.67
14	0.96
16	1.29

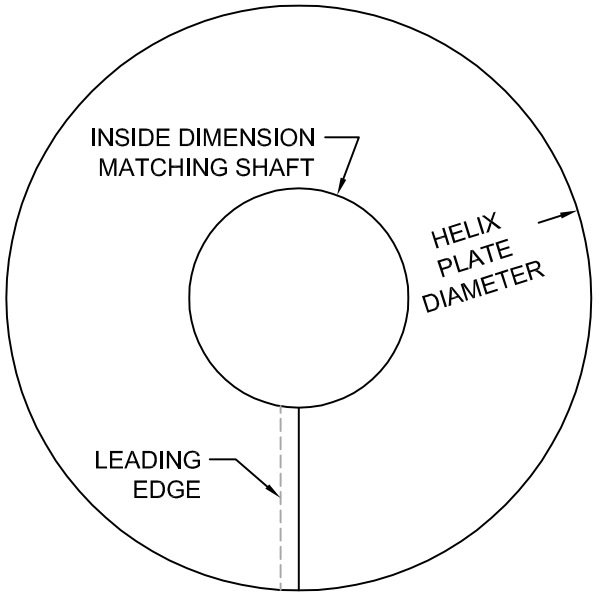

V-Style Plates[1]

Plate Diameter (inches)	Area (ft^2)
8*	0.22
10	0.40
12	0.62
14	0.87
16	1.15

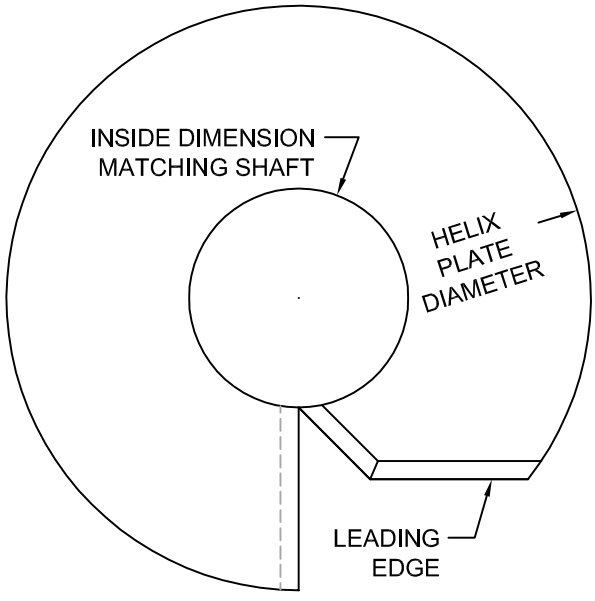

(1) V-Style plates feature a special cut on the leading edge (or cutting edge). This edge is cut at two successive 45° angles to roughly simulate a spiral. This is in addition to the 45° bevel on the leading edge which is a standard feature for helix plates of both styles. V-Style plates are appropriate for use in applications where rocky or rubble-filled soils are anticipated, or where very dense layers need to be penetrated. Some smaller plate diameters indicated by an asterisk (*), are not typically available in a V-Style.

© 2024 Supportworks®
All Rights Reserved

HP662

© 2024 Supportworks®
All Rights Reserved

HP662 Shaft Specifications & Capacities

Shaft Material[6]:
Ø6.625" x 0.280" wall
ASTM A500 Grade B or C
Yield strength = 60 ksi (min)
Tensile strength = 70 ksi (min)

Helix Plates[6]:
ASTM A572 Grade 50
½" thick (standard)
Helix plate geometry conforming to ICC-ES AC358

Surface Finish of Shaft Segments:
Available plain or hot-dip galvanized[2]

Shaft Coupler Material[6]:
Ø6.000" x 0.375" wall
ASTM A513 Type 5 Grade 1026
Yield strength = 70 ksi (min)
Tensile strength = 80 ksi (min)

Shaft Coupling Hardware[6]:
(4) - Ø1¾" ASTM A307 bolts with nuts
Electrozinc plated per ASTM B633

Nominal Thickness	**0.280 (in)**
Design Thickness[3]	**0.261 (in)**

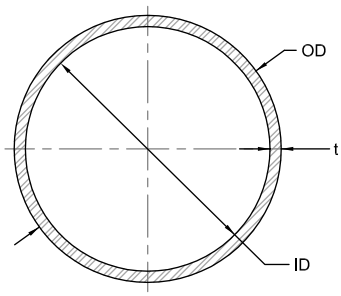

	Plain	Plain Corroded[1]	Galvanized Corroded[1,2]
OD (in)	6.625	6.589	6.615
t (in)	0.261	0.225	0.251
ID (in)	6.103	6.139	6.113
A (in²)	5.22	4.50	5.02
I (in⁴)	26.46	22.80	25.44
S (in³)	7.99	6.92	7.69
Z (in³)	10.58	9.12	10.17
r (in)	2.25	2.25	2.25
Shaft Max Allowable Compression Capacity[4,5] P_n/Ω (kips)	**182.6**	**157.4**	**175.6**
Shaft Max Allowable Tension Capacity[5] P_n/Ω (kips)	**98.7**	**83.3**	**93.0**

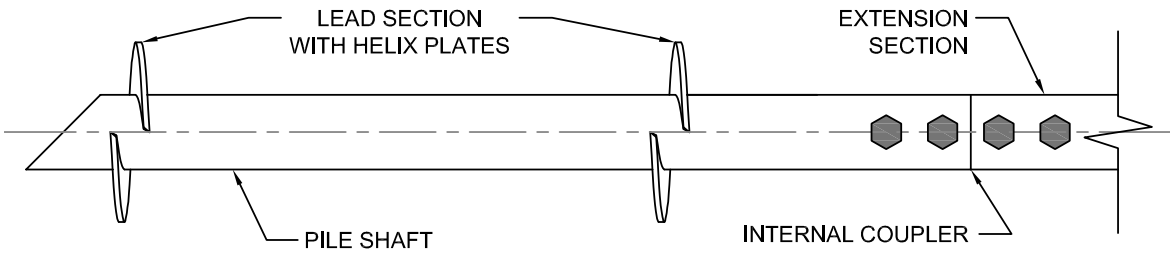

Torque Correlation Factor[6] K_t = N/A (ft^{-1})	**Maximum Ultimate Soil Capacity[6] Q_u = N/A (kips)**
Maximum Installation Torque[6] T = 35,000 (ft-lb)	**Maximum Allowable Soil Capacity[6] Q_a = N/A (kips)**

(1) Corroded properties and capacities include a 50-year scheduled sacrificial loss in thickness per ICC-ES AC358.

(2) Hot-dip galvanized coating in accordance with ASTM A123.

(3) Design thickness for HSS and Pipe based on 93% of nominal thickness per AISC.

(4) Allowable mechanical compression capacities consider continuous lateral soil confinement in soils with SPT N-values ≥ 4. Piles with exposed unbraced lengths or piles placed in weaker or fluid soils should be evaluated on a case-by-case basis by the project engineer.

(5) Listed mechanical capacities are for the shaft and coupled connections only. System capacity should also not exceed the installed allowable soil capacity or the allowable capacity of the respective bracket (see additional bracket tables).

(6) Larger diameter product lines are fully customized on a project specific basis. All values provided for these products are for general informational purposes only. Actual capacities (including any related to installation torque) will vary based on several project specific variables such as coupler details, end termination details, site specific soil profiles, and even material availability. Full scale load tests are recommended to confirm soil capacities determined in the design phase of the project.

© 2024 Supportworks®
All Rights Reserved

HP662 Helix Plate Net Bearing Areas

H-Style Plates

Plate Diameter (inches)	Area (ft^2)
10	0.31
12	0.55
14	0.83
16	1.16

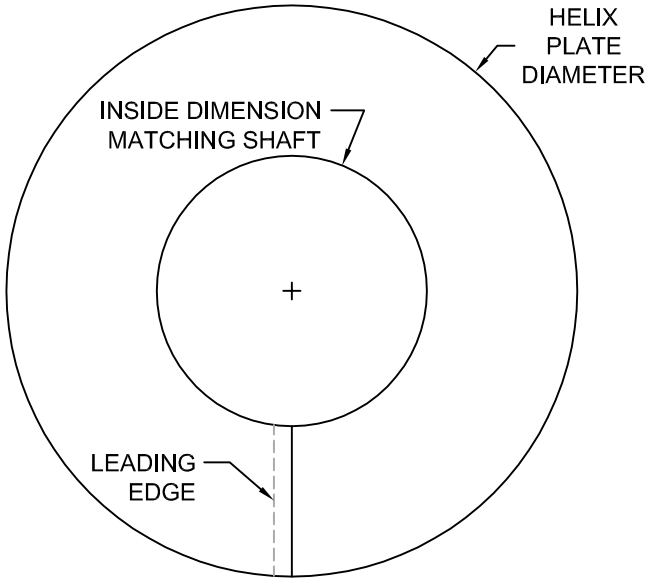

V-Style Plates(1)

Plate Diameter (inches)	Area (ft^2)
10*	0.29
12	0.51
14	0.77
16	1.06

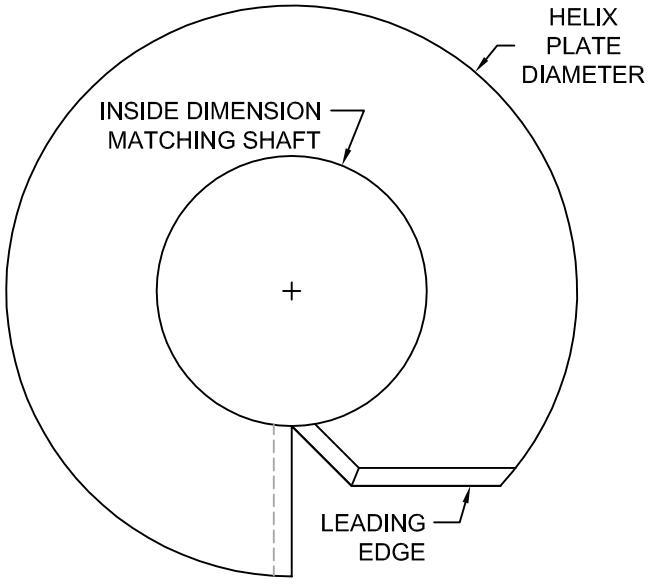

(1) V-Style plates feature a special cut on the leading edge (or cutting edge). This edge is cut at two successive 45° angles to roughly simulate a spiral. This is in addition to the 45° bevel on the leading edge which is a standard feature for helix plates of both styles. V-Style plates are appropriate for use in applications where rocky or rubble-filled soils are anticipated, or where very dense layers need to be penetrated. Some smaller plate diameters indicated by an asterisk (*), are not typically available in a V-Style.

© 2024 Supportworks®
All Rights Reserved

HP700

© 2024 Supportworks®
All Rights Reserved

HP700 Shaft Specifications & Capacities

Shaft Material[6]:
Ø7.000" x 0.362" wall
ASTM A252 Grade 3
Yield strength = 60 ksi (min)
Tensile strength = 70 ksi (min)

Helix Plates[6]:
ASTM A572 Grade 50
½" thick (standard)
Helix plate geometry conforming to ICC-ES AC358

Surface Finish of Shaft Segments:
Available plain or hot-dip galvanized[2]

Shaft Coupler Material[6]:
Ø7.750" x 0.313" wall
ASTM A513 Type 5 Grade 1026
Yield strength = 70 ksi (min)
Tensile strength = 80 ksi (min)

Shaft Coupling Hardware[6]:
(4) - Ø2" ASTM A307 bolts with nuts
Electrozinc plated per ASTM B633

Nominal Thickness	**0.362 (in)**
Design Thickness[3]	**0.337 (in)**

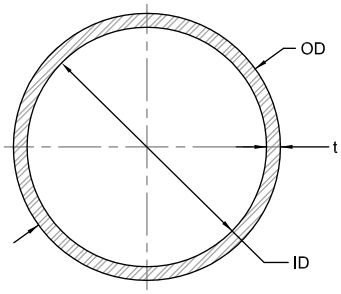

	Plain	Plain Corroded[1]	Galvanized Corroded[1,2]
OD (in)	7.000	6.964	6.990
t (in)	0.337	0.301	0.327
ID (in)	6.326	6.362	6.336
A (in²)	7.05	6.30	6.84
I (in⁴)	39.25	35.04	38.08
S (in³)	11.21	10.06	10.89
Z (in³)	14.97	13.37	14.53
r (in)	2.36	2.36	2.36
Shaft Max Allowable Compression Capacity[4,5] P_n/Ω (kips)	**246.9**	**220.5**	**239.6**
Shaft Max Allowable Tension Capacity[5] P_n/Ω (kips)	**135.0**	**118.8**	**130.5**

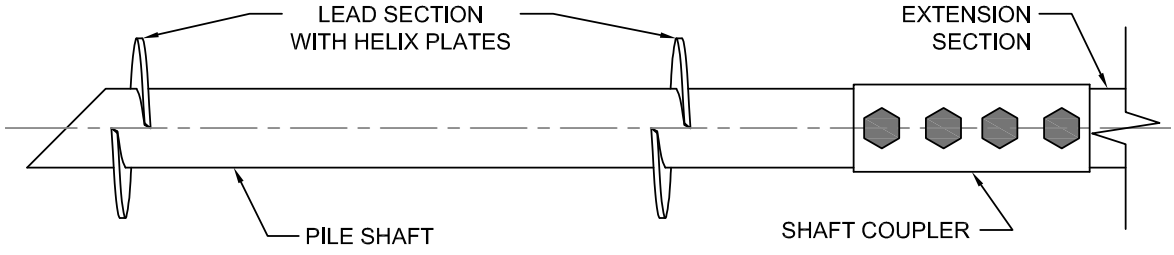

Torque Correlation Factor[6] K_t = N/A (ft^{-1})	**Maximum Ultimate Soil Capacity[6] Q_u = N/A (kips)**
Maximum Installation Torque[6] T = 50,000 (ft-lb)	**Maximum Allowable Soil Capacity[6] Q_a = N/A (kips)**

(1) Corroded properties and capacities include a 50-year scheduled sacrificial loss in thickness per ICC-ES AC358.

(2) Hot-dip galvanized coating in accordance with ASTM A123.

(3) Design thickness for HSS and Pipe based on 93% of nominal thickness per AISC.

(4) Allowable mechanical compression capacities consider continuous lateral soil confinement in soils with SPT N-values ≥ 4. Piles with exposed unbraced lengths or piles placed in weaker or fluid soils should be evaluated on a case-by-case basis by the project engineer.

(5) Listed mechanical capacities are for the shaft and coupled connections only. System capacity should also not exceed the installed allowable soil capacity or the allowable capacity of the respective bracket (see additional bracket tables).

(6) Larger diameter product lines are fully customized on a project specific basis. All values provided for these products are for general informational purposes only. Actual capacities (including any related to installation torque) will vary based on several project specific variables such as coupler details, end termination details, site specific soil profiles, and even material availability. Full scale load tests are recommended to confirm soil capacities determined in the design phase of the project.

© 2024 Supportworks®
All Rights Reserved

HP700 Helix Plate Net Bearing Areas

H-Style Plates

Plate Diameter (inches)	Area (ft^2)
10	0.28
12	0.52
14	0.80
16	1.13

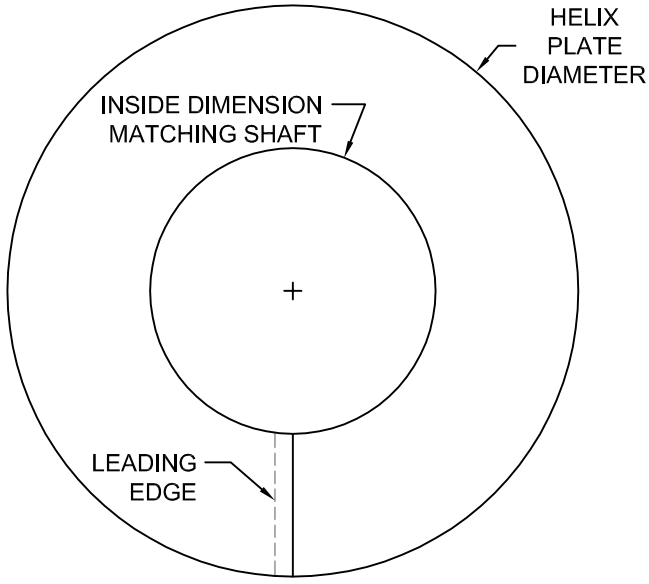

V-Style Plates[1]

Plate Diameter (inches)	Area (ft^2)
10*	0.27
12	0.49
14	0.75
16	1.04

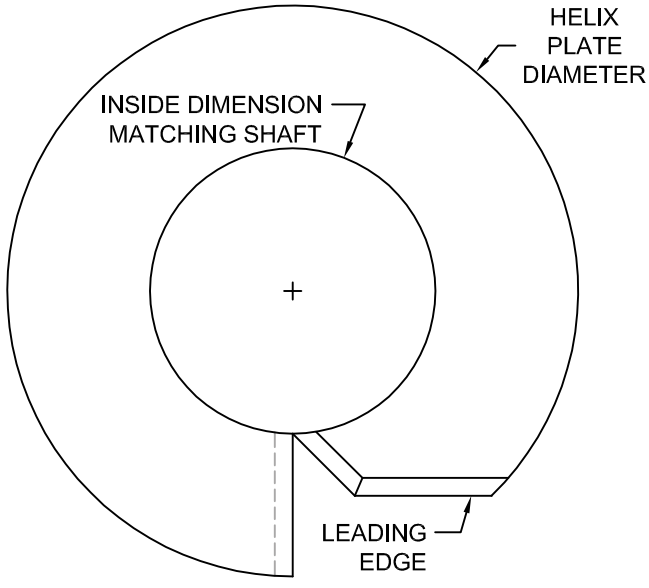

(1) V-Style plates feature a special cut on the leading edge (or cutting edge). This edge is cut at two successive 45° angles to roughly simulate a spiral. This is in addition to the 45° bevel on the leading edge which is a standard feature for helix plates of both styles. V-Style plates are appropriate for use in applications where rocky or rubble-filled soils are anticipated, or where very dense layers need to be penetrated. Some smaller plate diameters indicated by an asterisk (*), are not typically available in a V-Style.

© 2024 Supportworks®
All Rights Reserved

HELIX PLATE CAPACITIES

The capacity of an individual helix plate is determined through laboratory testing in accordance with Section 4.3 of ICC-ES AC358. This test is completed by placing a short section of shaft with a single helix plate in a laboratory load frame or universal machine. The helix plate bears on a helix-shaped fixture or on an adjustable mandrill with five or more pins. The line of bearing varies and is predetermined for each helix plate and pile shaft combination. Load is applied to be coaxial with the longitudinal axis of the pile shaft and normal to the bearing surface of the helix plate.

The Foundation Supportworks Engineering Department completed helix-capacity testing for several pile shaft/helix plate configurations in accordance with AC358 (See *Figure 1A.1*). HP288 and HP350 shafts were tested with 8, 10, 12 and 14-inch diameter helix plates. The helix plates were ⅜-inch thick Grade 50 (50 ksi min. yield) steel. Load was applied until (1) the test sample refused any additional load by reaching a failure mechanism such as weld shear, plate bending, or shaft buckling, or (2) a practical, usable resistance was exceeded. Test results (ultimate helix plate capacities) ranged from 101 kips to 200 kips, with most tests being terminated at loads of 140 kips (HP288) or 200 kips (HP350) since these values greatly exceed a practical, usable pile capacity. Considering even the lowest atypical test result, the allowable individual helix plate capacity for both shafts and all plate diameters would exceed 41 kips with a factor of safety of 2.0 and a scaling factor to normalize for 50 years of plain steel corrosion. A helix plate capacity of 40 kips was then selected for all helix plates on both shaft sizes. This value is published within ICC-ES Report ESR-3074 for 8, 10, 12 and 14-inch diameter helix plates on HP288 and HP350 shafts.

An allowable individual helix plate capacity of 40 kips will rarely be approached in practice since most heavily loaded applications will include pile designs with multiple helix plates. Exceptions could be installations in hard clay, dense granular soils or bedrock, where ½-inch thick helix plates would then likely be considered to increase individual plate capacities and minimize plate deflections under load. In most soil conditions, the torque-correlated, allowable soil capacity will limit the service load distributed to each helix plate to much less than 40 kips. Even in light load applications, multi-helix pile configurations are commonly utilized to increase bearing area, lower contact pressures within the soil, and minimize pile deflections due to soil deformation. Multi-helix pile configurations are also typically easier to install due to the downward thrust provided by the additional helix plates. For additional discussion about helix plates, see *Section 1.3.1* of this manual.

Figure 1A.1 Helix capacity testing of HP288 with 14-inch diameter helix plate

© 2024 Supportworks®
All Rights Reserved

CHAPTER 1

APPENDIX 1B

Helicast® Grouted Helical Pile Specifications & Capacities

Helicast® Grouted Helical Pile Specifications & Capacities

Shaft Material:
1.50" (HA150) or 1.75" (HA175) round corner square bar ASTM A29
Yield strength = 90 ksi
Tensile strength = 115 ksi
Detailed section properties as well as mechanical and torsional limits are available in *Appendix 1A*

Helix Plates:
ASTM A572 Grade 50 material
⅜" thick (standard)
½" thick (available)
Helix plate geometry conforming to AC358

Surface Finish of Shaft Segments:
Available plain or hot-dip galvanized per ASTM A123

Shaft Coupling Hardware:
(1) - Ø¾" Grade 8 bolt with nut (HA150)
(2) - Ø¾" Grade 8 bolts with nuts (HA175)
Mechanically galvanized per ASTM B695

Soil Displacement Plates:
Ø5.00", Ø6.00", and Ø7.00" (HA150)
Ø5.00", Ø6.00", Ø7.00", and Ø9.00" (HA175)
Provided with and without soil displacement paddles
¼" thick ASTM A36 material
Special displacement plates for use with casing are also available
Available plain (standard) or hot-dip galvanized per ASTM A123

Gravity Fed Grout Column:
28 day breaking strength (f'_c) = Varies (4,000 - 6,000 psi is most common)
Modulus of elasticity (E_c) = Varies
Maximum axial compression capacity of grout column at service load[(1)] = $0.3 \times f'_c \times A$
Maximum nominal axial compression capacity of grout column[(1,3)] = $0.6 \times f'_c \times A$

Maximum Allowable System Compression Capacity[(1,3,4,5,6)] = Varies
Maximum Allowable System Tension Capacity[(2,4,5,6)] = Varies

(1) Allowable system compression capacity includes the combined effects of friction resistance surrounding the grout column and the soil bearing resistance at the helix plates. Ultimate skin friction resistance should be determined through a generally accepted method of analysis. The available ultimate skin friction should be limited by the nominal axial strength of the grout column. When available skin friction is limited by the grout column strength, then the end bearing resistance at the helix plates should also be neglected from the calculated pile capacity.

(2) Allowable system tension capacity includes only the allowable soil bearing resistance at the helix plates. Skin friction should not be included in the calculated resistance.

(3) Foundation Supportworks recommends the given nominal axial compression capacity of the grout column, which is a simplified version of equation (14.5.3.1) of ACI 318-14 assuming continuous lateral soil confinement. Other generally accepted methods of analysis may be considered at the discretion of the helical pile designer.

(4) The end bearing geotechnical capacity may be estimated during installation by monitoring and recording the final installation torque and applying default torque correlation factors for the central steel shaft per ICC-ES AC358.

(5) The allowable resistance attributed to soil bearing at the helix plates should also not exceed the allowable mechanical capacity of the shaft, couplers, helix plates, or the termination device used at the pile head.

(6) Full scale load testing should be performed on a representative sample for each project. Allowable capacity should be determined by dividing the limiting ultimate load of the load test by an appropriate factor of safety (FOS). Load tests should be conducted in general accordance with the procedures of ASTM D1143 (compression) and D3689 (tension). FOS is most commonly taken as 2.0, although higher or lower factors of safety may be considered at the discretion of the helical pile designer or as dictated by local code or project requirements. Higher factors of safety should be considered when a load test is not performed, including a minimum FOS of 2.5 for the friction resistance.

© 2024 Supportworks®
All Rights Reserved

CHAPTER 1

APPENDIX 1C

Lift Assembly Specifications

Model 238 Lift Assembly Specifications

Compatible Brackets[3]:
FS238B

Lift Cylinder (FS256LC):
Stroke = 4"
Cylinder action = single
Bore = Ø2.56"
Hydraulic area = 5.15 in^2
Max operating pressure[2] = 8,000 psi

Lift Assembly Hardware[1]:
(2) - Ø⅝" x 16" long coil rod
with nuts and hex couplers, or
(2) - Ø⅝" x 14" long all-thread rod
with nuts and hex couplers

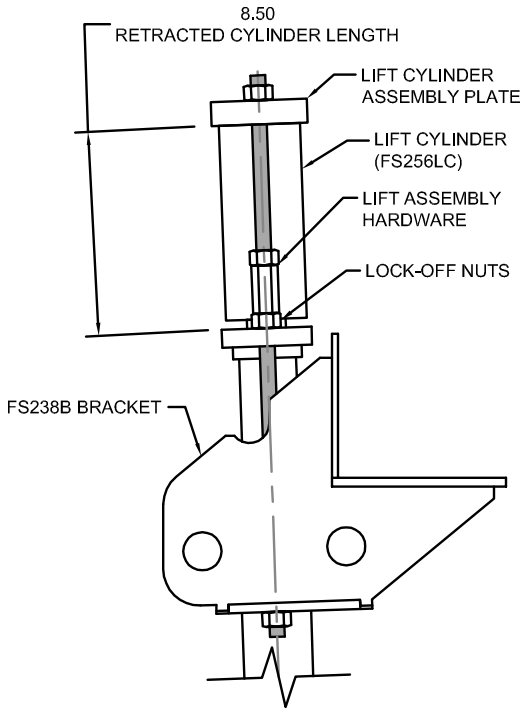

Lift Assembly Rated Lifting Load[2,3] 27.6 kips			
Hydraulic Pressure (psi)	**Lift Force[2,3] (kips)**	**Hydraulic Pressure (psi)**	**Lift Force[2,3] (kips)**
400	2.1	3,200	16.5
800	4.1	3,400	17.5
1,200	6.2	3,600	18.6
1,400	7.2	3,800	19.6
1,600	8.3	4,000	20.6
1,800	9.3	4,200	21.7
2,000	10.3	4,400	22.7
2,200	11.3	4,600	23.7
2,400	12.4	4,800	24.8
2,600	13.4	5,000	25.8
2,800	14.4	5,200	26.8
3,000	15.5	5,350	27.6

(1) Hardware used in the lift assembly must be selected to match the hardware used with the installed bracket assembly.

(2) Do not operate at pressures that produce lift forces in excess of the lift assembly's rated lifting load. Max operating pressure of the lift cylinder produces forces that exceed this value and is given for informational purposes only.

(3) Rated lifting load is given for the lift assembly only. Do not operate at pressures that exceed the allowable capacities of the system which are governed by the allowable capacities of the bracket and other system components, as well as the torque-correlated soil capacity, or installed driving force divided by an appropriate factor of safety. All of these governing limits are outlined in places elsewhere in the chapter appendices.

© 2024 Supportworks®
All Rights Reserved

Model 288 Lift Assembly[2] Specifications

Compatible Brackets[4]:
HP238B2, HP288B2, FS288BL2, FS288BL2V, FS288BFM, SPBA (when used with the SPLCAP assembly - See Slab Pier Detail)

Lift Cylinder (FS35LC):
Stroke = 4"
Cylinder action = double
Bore = Ø3.50"
Hydraulic area = 9.62 in^2
Max operating pressure[3] = 8,000 psi

Lift Assembly Hardware[1,2]:
(2) - Ø¾" x 16" long all-thread rod with nuts and hex couplers, or
(2) - Ø¾" x 16" long coil rod with nuts and hex couplers

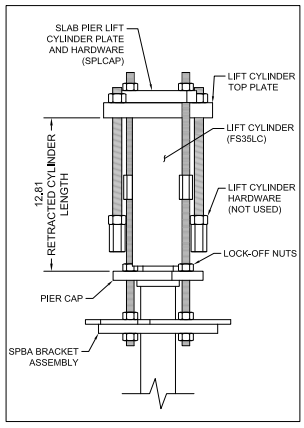

Slab Pier Detail

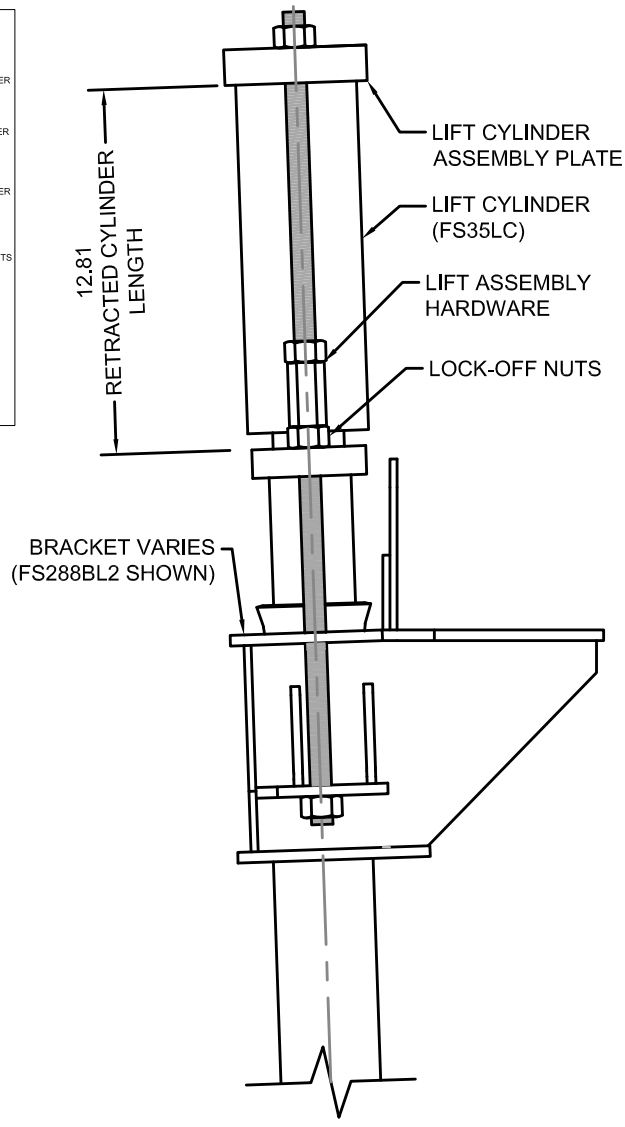

Lift Assembly Rated Lifting Load[3,4] 39.7 kips			
Hydraulic Pressure (psi)	**Lift Force[3,4] (kips)**	**Hydraulic Pressure (psi)**	**Lift Force[3,4] (kips)**
200	1.9	2,600	25.0
400	3.8	2,800	26.9
600	5.8	3,000	28.9
800	7.7	3,200	30.8
1,000	9.6	3,400	32.7
1,200	11.5	3,600	34.6
1,400	13.5	3,700	35.6
1,600	15.4	3,800	36.6
1,800	17.3	3,900	37.5
2,000	19.2	4,000	38.5
2,200	21.2	4,100	39.4
2,400	23.1	4,130	39.7

(1) Hardware used in the lift assembly must be selected to match the hardware used with the installed bracket assembly.

(2) Note that the only difference between the Model 288 and Model 350 lift assemblies is the diameter of the threaded rod hardware. All other components of the two assemblies are identical.

(3) Do not operate at pressures that produce lift forces in excess of the lift assembly's rated lifting load. Max operating pressure of the lift cylinder produces forces that exceed this value and is given for informational purposes only.

(4) Rated lifting load is given for the lift assembly only. Do not operate at pressures that exceed the allowable capacities of the system which are governed by the allowable capacities of the bracket and other system components, as well as the torque-correlated soil capacity, or installed driving force divided by an appropriate factor of safety. All of these governing limits are outlined in places elsewhere in the chapter appendices.

© 2024 Supportworks®
All Rights Reserved

Model 350 Lift Assembly[1] Specifications

Compatible Brackets[3]:
FS350B2, FS350B2V

Lift Cylinder (FS35LC):
Stroke = 4"
Cylinder action = double
Bore = Ø3.50"
Hydraulic area = 9.62 in^2
Max operating pressure[2] = 8,000 psi

Lift Assembly Hardware[1]:
(2) - Ø⅞" x 18" long all-thread rod
with nuts and hex couplers

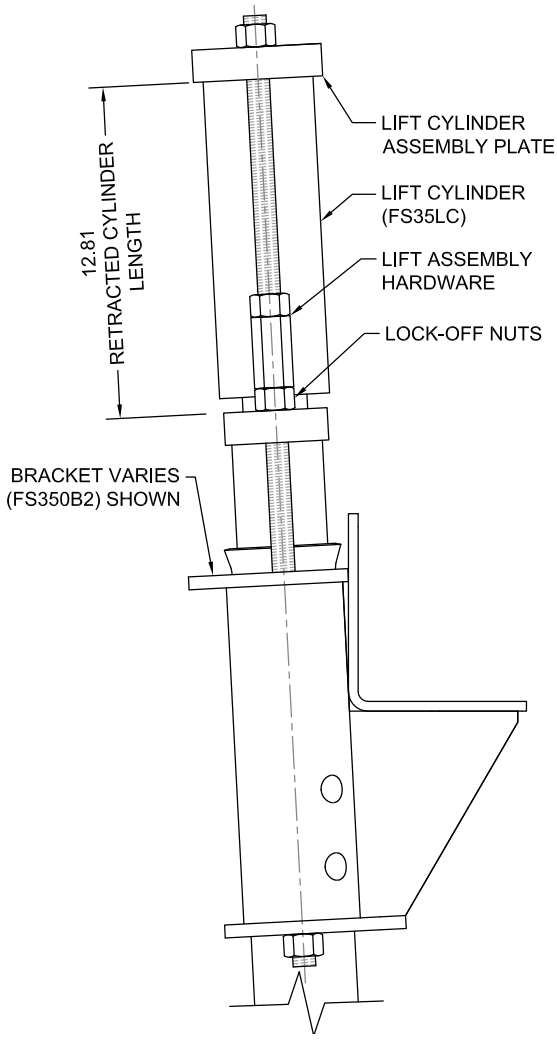

Lift Assembly Rated Lifting Load[2,3] 56.3 kips			
Hydraulic Pressure (psi)	**Lift Force[2,3] (kips)**	**Hydraulic Pressure (psi)**	**Lift Force[2,3] (kips)**
400	3.8	3,800	36.6
800	7.7	4,000	38.5
1,200	11.5	4,200	40.4
1,600	15.4	4,400	42.3
2,000	19.2	4,600	44.3
2,400	23.1	4,800	46.2
2,600	25.0	5,000	48.1
2,800	26.9	5,200	50.0
3,000	28.9	5,400	52.0
3,200	30.8	5,600	53.9
3,400	32.7	5,800	55.8
3,600	34.6	5,850	56.3

(1) Note that the only difference between the Model 288 and Model 350 lift assemblies is the diameter of the threaded rod hardware. All other components of the two assemblies are identical.

(2) Do not operate at pressures that produce lift forces in excess of the lift assembly's rated lifting load. Max operating pressure of the lift cylinder produces forces that exceed this value and is given for informational purposes only.

(3) Rated lifting load is given for the lift assembly only. Do not operate at pressures that exceed the allowable capacities of the system which are governed by the allowable capacities of the bracket and other system components, as well as the torque-correlated soil capacity, or installed driving force divided by an appropriate factor of safety. All of these governing limits are outlined in places elsewhere in the chapter appendices.

© 2024 Supportworks®
All Rights Reserved

CHAPTER 1

APPENDIX 1D

Pile Buckling Considerations

PILE BUCKLING CONSIDERATIONS

Buckling of helical piles is generally only considered when soil conditions consist of very soft clays or very loose sands with SPT N-values less than 4 blows per foot (bpf). Research has shown that soils with SPT N-values greater than or equal to 4 bpf provide sufficient lateral support to prevent buckling; however, determination of pile buckling is a complex problem that is affected by coupling strength/stiffness, pile batter, shaft section and elastic properties, load type and eccentricity, length of exposed pile shaft and soil strength.

The methods described in this section for buckling evaluation may not account for dynamic loading, partial embedment (exposed pile), pile geometry changes, and stiffness variations due to pile shaft couplings. The methods may be applicable for cases where fully embedded, grout-filled pipe piles (with couplings) are used, or for fully embedded piles without couplings. The design professional should be aware of the buckling design method assumptions as they apply to the helical pile design.

After the critical buckling load is calculated, a factor of safety (FOS) is applied to determine the allowable pile capacity to prevent buckling. A FOS of 1.67 would be consistent with AISC design methods, although helical pile designers routinely use factors of safety in the range of 1.5 to 2.0.

Euler Method

The Euler equation shown below provides an estimation of the elastic critical buckling load for a long, slender, ideal column:

$$P_e = (\pi^2 \cdot EI) / (KL)^2$$

Where,

P_e	=	Elastic Critical Buckling Load
E	=	Modulus of Elasticity of the Pile Shaft Cross Section
I	=	Moment of Inertia of the Pile Shaft Cross Section
K	=	Effective Length Factor
L	=	Unsupported Length

An ideal column is one that is perfectly straight, homogeneous, and free from any initial residual stresses. Since an ideal column can only exist in theory, AISC utilizes an adjustment coefficient to normalize the theoretical elastic buckling with the results observed in testing research. The elastic critical buckling load then becomes:

$$P_{crit} = 0.877P_e$$

Where,

P_{crit}	=	Critical Buckling Load

© 2024 Supportworks®
All Rights Reserved

It should be noted that the Euler Method is only suitable for intermediate length to longer columns that produce values of P_e less than $0.44F_yA$. When the Euler load (P_e) is greater than this value, then inelastic buckling will govern and P_{crit} becomes:

$$P_{crit} = \left[0.658^{\frac{F_yA}{P_e}}\right] F_yA$$

Where,

F_y = Yield Stress

A = Cross-Sectional Area

These equations for elastic and inelastic buckling would be applicable to helical piles installed without lateral soil support, e. g., piles with exposed lengths above the ground surface or piles penetrating fluid soils (SPT N-values = 0). In most other conditions, the critical buckling load determined using these equations may be overly conservative.

Davisson Method

The Davisson Method (1963) considers lateral support from the surrounding soil and variable boundary conditions for the pile. This method is based on manipulation of the governing differential equation which assumes the subgrade modulus of the soil is constant with depth along the pile:

$$EI\ (d^4y/dx^4) + P\ (d^2y/dx^2) + ky = 0$$

Where,

EI = Flexural Stiffness of the Pile

P = Axial Load

k = Subgrade Modulus

The differential equation was solved for various boundary conditions using non-dimensional variables. The boundary conditions are free (f), pinned (p) and fixed-translating (ft). For initial conditions where the pile is fully embedded, initially straight and the axial load is assumed constant (no skin friction), the dimensionless solutions are shown in *Figure 1D.1*. For further discussion of the derivation of these solutions the reader is advised to see the paper by Davisson (1963).

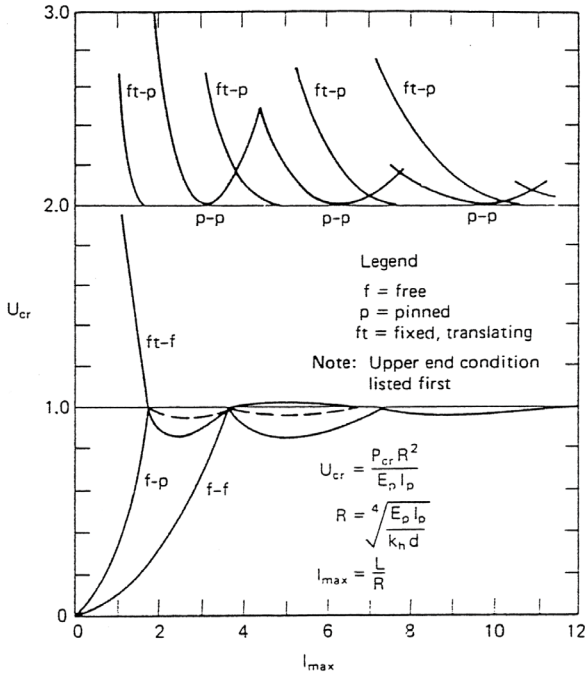

Figure 1D.1 Buckling load (load coefficient) vs. length (depth coefficient) for K_h = constant (Davisson 1963)

© 2024 Supportworks®
All Rights Reserved

The dimensionless variables are the critical axial load coefficient (U_{cr}) and the maximum value of the depth coefficient (I_{max}) and are defined as:

$$U_{cr} = (P_{cr} R^2) / (E_p I_p)$$

$$R = \sqrt[4]{((E_p I_p) / (k_h d))}$$

$$I_{max} = L / R$$

Where,

P_{cr}	=	Critical Axial Load
R	=	Relative Stiffness Factor
$E_p I_p$	=	Flexural Stiffness of the Pile
k_h	=	Horizontal Subgrade Modulus
d	=	Pile Diameter
L	=	Shaft Length over which k_h is constant

Typical values of k_h for design purposes are shown in *Figure 1D.2*.

	Soil Type-Consistency		
	Cohesion (psf)	**SPT N-value (bpf)**	**Design k_h (pci)**
Clay-Very Soft	<250	0-1	<30
Clay-Soft	250-500	2-4	30
Clay-Medium Stiff	500-1,000	5-8	100
Sand-Very Loose (above GWT)	NA	0-4	<25
Sand-Very Loose (below GWT)	NA	0-4	<20
Sand-Loose (above GWT)	NA	5-10	25
Sand-Loose (below GWT)	NA	5-10	20

Figure 1D.2 Typical Design Values for Horizontal Subgrade Modulus (Reese, Wang, et al. 2004b)

© 2024 Supportworks®
All Rights Reserved

Example

Consider a fully embedded pile installed to a depth of 25 feet within a soil profile consisting of 15 feet of very soft clay with an average SPT N-value = 1 bpf and an average cohesion value = 200 psf. The very soft clay layer is underlain by a dense sand which extends beyond the pile tip. Based on the pile design, a pinned-pinned boundary condition is selected. An HP287 pile is considered with the following parameters:

$\mathbf{E_p}$ = $29(10^6)$ psi
$\mathbf{I_p}$ = 1.445 in^4 for plain steel (plain corroded or galvanized corroded could also be considered)
d = 2.875 in. for plain steel (plain corroded or galvanized corroded could also be considered)
L = 15 ft. = 180 in.

Based on the cohesion of 200 psf, a design value of k_h = 20 pci is selected from *Figure 1D.2*.

$$\mathbf{R = \sqrt[4]{((29{,}000{,}000)(1.445) \ / \ (20)(2.875))} = 29.22 \text{ in.}}$$

$$\mathbf{I_{max} = 180 \ / \ 29.22 = 6.2}$$

From *Figure 1D.1*, with I_{max} = 6.2 and assuming pinned-pinned (p-p) boundary conditions, U_{cr} = 2.0. The critical buckling load (P_{cr}) can then be calculated from the design equation:

$$\mathbf{P_{cr} = (U_{cr} \, E_p \, I_p) \ / \ R^2 = ((2)(29{,}000{,}000)(1.445)) \ / \ 29.22^2 = 98{,}160 \text{ lb}}$$

Divide the critical buckling load by an appropriate FOS to determine the allowable pile capacity to prevent buckling.

© 2024 Supportworks®
All Rights Reserved

CHAPTER 1

APPENDIX 1E

Corrosion Considerations

CORROSION CONSIDERATIONS

The term "corrosion" is used to describe the degradation of a material or its properties due to reaction with its environment. Although most materials are known to corrode over time, corrosion is typically considered as the destructive attack of a metal by chemical or electrochemical reaction. During this process, ions from the base metal migrate from the surface, resulting in material loss. As the corrosion process and metal loss continues, there can be a reduction in material thickness and area, which could result in loss of structural capacity of a given member.

Romanoff (1957): "For electrochemical corrosion to occur there must be a potential difference between two points that are electrically connected and immersed in an electrolyte. Whenever these conditions are fulfilled, a small current flows from the anode area through the electrolyte to the cathode area and then through the metal to complete the circuit, and the anode area is the one that has the most negative potential, and is the area that becomes corroded through loss of metal ions to the electrolyte. The cathode area, to which the current flows through the electrolyte, is protected from corrosion because of the deposition of hydrogen or other ions that carry the current."

The following conditions must be met in order for corrosion to occur:

1. There must be two points (anode and cathode) on a metal structure with different electrical potential and these two points must be electrically connected to complete the circuit. The difference in electrical potential could be caused by inconsistencies in the metal, varying stress/strain points, contact with dissimilar metals or materials, etc.

2. There must be an electrolyte to carry current, and for below ground pile applications, soil moisture serves this purpose. The presence of soluble salts increases the electrical conductivity (or lowers resistivity) of the electrolyte, thereby increasing corrosion potential.

There is still much discussion and debate about how much corrosion actually occurs for buried metal, with the central argument typically being the amount of available oxygen. The amount of oxygen within soil decreases significantly just a few feet from the surface, unless the material is loosely-placed fill or an open-graded, granular soil. Relatively speaking, we would then expect these materials to present a higher potential for corrosion than undisturbed clayey soils. The presence of a water table further complicates the discussion as you'd expect less oxygen below the water table than above. It is also important to note that although oxygen-starved environments inhibit rusting, which is a specific type of corrosion, other types of galvanic or bacterial corrosion are still possible.

ICC Evaluation Service, LLC (ICC-ES) Acceptance Criteria 358 (AC358) and ICC-ES AC406 define corrosive soil environments by: (1) soil resistivity less than 1,000 ohm-cm; (2) soil pH less than 5.5; (3) soils with high organic content; (4) soil sulfate concentrations greater than 1,000 ppm; (5) soils located in landfills, or (6) soil containing mine waste. In such environments, the steel can be protected with a hot-dip galvanized zinc coating or with other means such as sacrificial anodes. A site-specific evaluation of the soil can be conducted in order to determine an appropriate level of protection. Foundation Supportworks engineers recommend that a corrosion engineer be consulted when site or project conditions warrant further evaluation.

© 2024 Supportworks®
All Rights Reserved

Foundation Supportworks helical products and hardware may be ordered as plain (black, uncoated) steel or with a protective coating to further prolong the anticipated service life. Helical pile capacity ratings are therefore provided for plain, plain corroded, and galvanized corroded pile sections. Scheduled corrosion losses are for a period of 50 years and are in accordance with ICC-ES AC358. Helical products (leads, extensions and bracket assemblies) are available hot-dip galvanized in accordance with:

- ASTM A123, Standard Specification for Zinc (Hot-Dip Galvanized) Coatings on Iron and Steel Products

Hardware and fasteners may be hot-dip galvanized, electro-plated, or mechanically galvanized in accordance with:

- ASTM A153, Standard Specification for Zinc Coating (Hot-Dip) on Iron and Steel Hardware
- ASTM B633, Standard Specification for Electrodeposited Coatings of Zinc on Iron and Steel
- ASTM B695, Standard Specification for Coatings of Zinc Mechanically Deposited on Iron and Steel

A Commonsense Discussion

Potential corrosion may be an objection for specifiers considering helical piles. These specifiers may feel that helical piles may not be an appropriate option because of their concerns about the steel corroding away and leaving the supported structure on a compromised foundation. While it's true that steel does corrode over time, it is actually quite rare that corrosion will govern the design of new construction helicals. This is because of the nature of how helical piles are designed and installed. To state it simply, the amount of steel which is required to develop the necessary torque during installation far exceeds the amount of steel that is required to resist the design axial compressive forces. This can be demonstrated in the following example.

A helical pile is required to resist an allowable compressive load of 35 kips. The Model HP288 helical pile is selected for the project (see *Appendix 1A*, Helical Product Ratings, Properties & Details). The pile is installed to a torque of 7,800 ft-lb to provide an ultimate torque-correlated soil capacity of 70 kips (FOS = 2.0). The pile has an uncorroded cross-sectional area of the shaft of 2.11 in^2 (plain steel) and an allowable mechanical axial capacity of 74.0 kips on the day the pile is installed. However, the overall allowable pile capacity would remain at 35 kips, limited by the installation torque and the correlated allowable soil capacity, even though the steel section in the ground is capable of a great deal more.

Following installation, we can now consider the effects of corrosion. ICC-ES AC358 provides scheduled losses or "sacrificial thicknesses" for black steel or steel with protective coatings, and these sacrificial thicknesses must be considered for design purposes. These sacrificial thicknesses are based on moderately corrosive soils over a period of 50 years. This is a design criterion only and should not be confused with service life. In our example, after 50 years in the ground, a black, uncoated steel pile would have lost a steel thickness of 0.036 inch due to corrosion. The pile would have a remaining cross-sectional area of the shaft of 1.82 in^2 and an allowable (mechanical) axial capacity of 63.6 kips. This is the value that Foundation Supportworks engineers list as the "plain corroded" allowable mechanical axial capacity in compression for the HP288. The overall allowable pile capacity still remains 35 kips, limited by the installation torque that was applied 50 years earlier.

© 2024 Supportworks®
All Rights Reserved

So how much steel would have to be lost before corrosion would begin to govern the design? See *Figure 1E.1*. The remaining allowable mechanical capacity does not fall below the allowable pile capacity of 35 kips from our example until the sacrificial thickness exceeds 0.135 inch. This is nearly four times greater than the scheduled 50-year corrosion loss rate for black steel and over eight times greater than the scheduled 50-year corrosion loss rate for hot-dip galvanized steel.

Corrosion is a very complex subject involving many factors which can affect loss rates. With some understanding, it quickly becomes apparent that even if the corrosive properties of the soil at a particular site are especially aggressive, it is still quite rare for corrosion to govern the design of a helical pile solution.

	Sacrificial Thickness (in)	Steel Area (in^2)	Allowable Mechanical Capacity (k)	Sacrificial Thickness (in)	Steel Area (in^2)	Allowable Mechanical Capacity (k)
Day of installation	**0.000**	**2.11**	**74.0**	0.090	1.37	48.1
	0.005	2.07	72.5	0.095	1.33	46.6
	0.100	1.29	45.2	0.100	1.29	45.2
	0.015	1.99	69.7	0.105	1.25	43.8
Scheduled 50 year corrosion loss for zinc-coated steel per AC358	**0.016**	**1.98**	**69.4**	0.110	1.21	42.3
	0.020	1.95	68.2	0.115	1.17	40.9
	0.025	1.91	66.8	0.120	1.13	39.4
	0.030	1.87	65.3	0.125	1.09	38.0
	0.035	1.83	63.9	0.130	1.04	36.6
Scheduled 50 year corrosion loss for plain black steel per AC358	**0.036**	**1.82**	**63.6**	0.135	1.00	35.1
	0.040	1.78	62.5	0.140	0.96	33.7
	0.045	1.74	61.0	0.145	0.92	32.2
	0.050	1.70	59.6	0.150	0.88	30.8
	0.055	1.66	58.1	0.155	0.84	29.4
	0.060	1.62	56.7	0.160	0.80	27.9
	0.065	1.58	55.3	0.165	0.76	26.5
	0.070	1.54	53.8	0.170	0.72	25.0
	0.075	1.50	52.4	0.175	0.67	23.6
	0.080	1.46	51.0	0.180	0.63	22.2
	0.085	1.41	49.5	0.185	0.59	20.7

Figure 1E.1 HP288 Steel Areas and Allowable Mechanical Capacities for Increasing Sacrificial Thickness

© 2024 Supportworks®
All Rights Reserved

CHAPTER 1

APPENDIX 1F

Guidelines & Recommendations

GEOTECHNICAL INVESTIGATION GUIDELINES FOR HELICAL PILE, HELICAL ANCHOR & PUSH PIER DESIGN

Design professionals rely on site-specific geotechnical investigations to provide soil strength parameters for use in foundation design. However, when these investigations do not properly identify a suitable bearing stratum, the project may be impacted with additional costs or delays until such adequate information is obtained. At the very least, contractors left to bid on a project with little to no usable soil information will do so conservatively. These bid proposals are then often filled with clauses outlining potential change order items, e.g., additional footage, revisions to the shaft section, revisions to the helix plate configuration, costs and responsibility due to failed load tests, etc. These extras often add up to many times the cost to simply complete deep soil borings and obtain the necessary soil information.

This document is not intended for incorporation into bid specifications, proposals, or requests for proposals. Ultimately, it is the role of the owner and his/her team of design professionals and contractors to determine the scope of geotechnical investigation necessary based on considerations that may include structure size and type, structure design category, anticipated design loads, acceptable levels of risk, and/or available funding.

This document is provided as a guide to assist design professionals, contractors and owners when helical piles, helical anchors, or push piers are planned. Due to differences in design, fabrication, and performance of seemingly equivalent products between manufacturers, these guidelines are intended exclusively for products designed and manufactured by Foundation Supportworks.

Hydraulically Driven Push Piers

1. Push piers are advanced into the ground with hydraulic equipment exerting a steady but high downward force at the top of the pier. With most push pier systems using 4-inch O.D. shafts or smaller, this translates to high contact pressures with the soil. In order to provide competent bearing and to also minimize the potential for the push pier to punch through a seemingly competent but thin layer of soil, a minimum thickness of 10 to 15 feet of hard/dense material should be identified or be known to exist. This material may consist of hard clays, dense to very dense sands, or competent bedrock. The required thickness and strength of this layer would increase with an increase in the required pier capacity.

2. The standard penetration test (SPT) completed in accordance with ASTM D1586 is a common method of retrieving disturbed soil samples in the field while also providing correlations to several soil strength parameters. The SPT is performed by driving a 2-inch O.D., split-barrel sampler 18 inches with a 140-pound hammer falling a distance of 30 inches. The number of blows required to drive the sampler the final 12 inches is recorded as the standard penetration number, or N-value. Typically, N-values of 35 to 40 blows per foot for clay soils and 30 to 35 blows per foot for sand are required to provide end-bearing resistance for push piers.

© 2024 Supportworks®
All Rights Reserved

If the loading is extremely light or the piers are long enough to develop significant skin friction, lower end-bearing resistance may be required. However, these guidelines are good rules-of-thumb for most installations.

3. The standard penetration test provides a reasonable indication of strength and density of granular soils with correlations available to relate SPT N-values to relative density, unit weight and internal friction angle. Laboratory direct shear tests or triaxial tests provide even more accurate estimates of soil strength which may be warranted for large projects. The additional cost of performing these tests could be offset by a more economical pier design that would not have been considered using SPT results alone.

4. SPT N-values may be inconsistent for fine-grained, cohesive soils and may not accurately reflect the soil shear strength. Tests may also be conducted on intact cohesive soil samples with pocket penetrometers. These results can vary widely between technicians depending upon the accuracy of the instrument and how closely the test procedure is followed. Laboratory testing of cohesive samples collected using undisturbed sampling methods, such as Shelby tube sampling (ASTM D1587), provides more reliable results. The more common methods for laboratory testing of undisturbed samples of cohesive soils are the unconfined compression test, the triaxial shear test and the direct shear test. Undrained shear strengths in excess of 4,000 pounds per square foot (psf) are typically required to provide end-bearing resistance for push piers.

5. The presence of very loose granular soil and very soft to soft cohesive soil should be identified. Column buckling may be a concern when very loose or soft soil is present in layer thicknesses of more than just a few feet, especially for a deep foundation element that derives its capacity primarily from end-bearing. Column buckling should be considered when SPT N-values are less than 4 blows/foot. When SPT sampling indicates weight-of-hammer (WOH) or weight-of-rod (WOR) values, additional laboratory testing for soil strength is recommended to document the shear strength in the WOH/WOR zone. Cone penetrometer tests (CPT) completed in accordance with ASTM D3441 may also be considered to measure in situ soil strengths. The CPT is widely used in lieu of, or as a supplement to, the SPT. The CPT is particularly suited for soft clays, soft silts, and fine to medium sand deposits.

6. The presence of rubble fill, construction debris, or fill soils containing cobbles or boulders should be identified. Large, hard fractions within fill soils would likely stop advancement of the push pier. Pre-drilling may be required to allow the push pier to penetrate these soils and reach a suitable bearing stratum.

7. When project characteristics or site conditions warrant, the owner and his/her team of design professionals may elect to determine the corrosive characteristics of the soils. Geotechnical or environmental consultants may classify soils as corrosive based on visual review of soil samples, from soil survey maps of the area, or from the results of additional testing. At a minimum, pH and resistivity testing are required for a corrosion analysis. Multi-directional field resistivity testing is preferred over laboratory resistivity testing. For a more complete corrosion analysis, chemical analyzes may be completed to determine specific concentration levels. Corrosive characteristics of the soil should be determined from the ground surface to the bearing elevation of the deep foundation, if practical.

© 2024 Supportworks®
All Rights Reserved

Helical Piles/Anchors

1. Helical piles and anchors are advanced into the ground by the application of torque and crowd. Crowd (or downforce) is applied longitudinally with the shaft to initiate penetration into the soil with the helix bearing plates. Less crowd is typically needed after the helix plates advance a few feet below the surface. Additional crowd may be needed in order to maintain the proper penetration rate of about 3 inches per revolution (for a helix plate with a 3-inch pitch) through stiffer/denser soil layers. Helical piles and anchors are best suited for medium dense sands and stiff to very stiff clay soils, although they can be effectively designed for bearing in very dense sands and hard clay. With proper design and installation techniques, helical piles may also be considered for bearing on or within soft or weathered bedrock. A competent bearing stratum should be identified by the geotechnical investigation. Additional helix plates are often needed along the shaft as the required pile/anchor capacity increases or when bearing in lower-strength soils. Therefore, with higher pile/anchor capacities, the known or investigated thickness of the competent soil layer must also increase to fully embed all of the helix plates along the shaft. For compression piles, the geotechnical investigation should extend at least 5 to 10 feet below the anticipated termination depth of the pile. Soil strength parameters for the soils within that 5 to 10 feet should be equivalent to or greater than those strength parameters for the soils at the helix bearing depths.

2. The standard penetration test (SPT) completed in accordance with ASTM D1586 is a common method of retrieving disturbed soil samples in the field while also providing correlations to several soil strength parameters. The SPT is performed by driving a 2-inch O.D. split-barrel sampler 18 inches with a 140-pound hammer falling a distance of 30 inches. The number of blows required to drive the sampler the final 12 inches is recorded as the standard penetration number, or N-value. Typically, N-values of 15 to 30 blows per foot for clay soils and 10 to 25 blows per foot for sand are preferred for providing the necessary end-bearing resistance for helical piles or helical anchors. N-values higher or lower than those ranges may also be considered.

3. The standard penetration test provides a reasonable indication of strength and density of granular soils with correlations available to relate SPT N-values to relative density, unit weight and internal friction angle. Laboratory direct shear tests or triaxial tests provide even more accurate estimates of soil strength which may be warranted for large projects. The additional cost of performing these tests could be offset by a more economical pile/anchor design that would not have been considered using SPT results alone.

4. SPT N-values may be inconsistent for fine-grained, cohesive soils and may not accurately reflect the soil shear strength. Tests may also be conducted on intact cohesive soil samples with pocket penetrometers. These results can vary widely between technicians depending upon the accuracy of the instrument and how closely the test procedure is followed. Laboratory testing of cohesive samples collected using undisturbed sampling methods, such as Shelby tube sampling (ASTM D1587), provides more reliable results. The more common methods for laboratory testing of undisturbed samples of cohesive soils are the unconfined compression test, the triaxial shear test, and the direct shear test. Undrained shear strengths ranging from 1,500 psf to 4,000 psf are preferred for the use of helical piles or anchors, although higher or lower values may also be considered.

5. The presence of very loose, granular soil and very soft to soft cohesive soil should be identified. Column buckling may be a concern for compression piles when very loose or soft soil is present in layer thicknesses

© 2024 Supportworks®
All Rights Reserved

of more than just a few feet, especially for a deep foundation element that derives its capacity primarily from end bearing. Column buckling should be considered when SPT N-values are less than 4 blows/foot. When SPT sampling indicates weight-of-hammer (WOH) or weight-of-rod (WOR) values, additional laboratory testing for soil strength is recommended to document the shear strength in the WOH/WOR zone. Cone penetrometer tests (CPT) completed in accordance with ASTM D3441 may also be considered to measure in situ soil strengths. The CPT is widely used in lieu of, or as a supplement to, the SPT. The CPT is particularly suited for soft clays, soft silts, and fine to medium sand deposits.

6. Helical bearing within soft or sensitive clays should be avoided due to long-term settlement or creep effects. Pile/anchor capacities should be limited when helix plates bear within medium stiff clay or loose sands, and a higher factor of safety (FOS ≥ 3) may also be considered to reduce potential long-term settlement or creep.

7. Groundwater levels should be accurately identified during the geotechnical investigation, particularly for sites with granular soils. The presence of groundwater above the anticipated bearing depths of the helix plates may significantly reduce the effective overburden stresses, thereby reducing pile capacities in granular soils. Groundwater table fluctuations should be considered for the pile/anchor design and installation. The highest potential groundwater elevation should be used for design of the helix plate configuration, and the current groundwater elevation should be used for the determination of installation torque requirements with that given plate configuration.

8. The presence of rubble fill, construction debris, or fill soils containing cobbles or boulders should be identified. Large, hard fractions within fill soils would likely stop advancement of the helical pile or anchor. Pre-drilling or removal of the hard fractions may be required to allow helical piles/anchors to penetrate these soils and reach a suitable bearing stratum.

9. When project characteristics or site conditions warrant, the owner and his/her team of design professionals may elect to determine the corrosive characteristics of the soils. Geotechnical or environmental consultants may classify soils as corrosive based on visual review of soil samples, from soil survey maps of the area, or from the results of additional testing. At a minimum, pH and resistivity testing are required for a corrosion analysis. Multi-directional field resistivity testing is preferred over laboratory resistivity testing. For a more complete corrosion analysis, chemical analyzes may be completed to determine specific concentration levels. Corrosive characteristics of the soil should be determined from the ground surface to the bearing elevation of the deep foundation, if practical.

10. Soil strength parameters should be determined for the top 10 feet of the soil profile when helical piles are subjected to lateral loading. Continuous sampling or continuous in situ testing methods should be used within this zone in order to estimate the lateral load capacity of the pile. For critical projects, consideration could be given to special sampling and testing techniques such as pressuremeter testing; otherwise, typical sampling and testing methods as described above may be suitable.

© 2024 Supportworks®
All Rights Reserved

Alternative Methods of Developing Geotechnical Design Information

For many projects, an appropriate level of geotechnical information has not been obtained prior to initiating a preliminary design for helical piles and push piers. New construction helical piles are often an afterthought following a shallow geotechnical investigation and discovery of weak, near-surface soils. Helical piles are then listed in the geotechnical report or on the project plans as a deep foundation alternative, but additional or deeper test borings are rarely completed to adequately identify the soil strength parameters for the deeper bearing soils. In additional to a geotechnical investigation, there are other potential sources or methods for obtaining geotechnical information for a preliminary design.

1. Establish a relationship with a local geotechnical engineering firm. An established, local geotechnical firm may have performed a previous investigation within the area of the proposed project, or may have knowledge of the general soil profile. A discussion with the geotechnical firm would allow the installing contractor to, at a minimum, determine if soil conditions are suitable for use of helical piles or push piers.

2. Contact local well drilling firms for any information regarding local ground/geologic conditions.

3. Contact the Geologic Survey for the applicable state jurisdiction. This agency often maintains records of test borings and wells throughout a given state, and this information may be used to support a preliminary design effort.

4. Conduct a test installation of a helical pile/anchor, also called a "helical test probe". A typical helical test probe consists of a Model HA150 or Model HA175 lead section with a single 10 or 12-inch helix plate and multiple extensions to reach the required depth. For some soil profiles, a double helix may be necessary to provide the thrust needed to penetrate stiff or dense strata or advance through particularly soft zones. For these situations, a double 8/10 or 10/12 helix plate configuration generally works well. Torque must be monitored in 1-foot intervals during installation of the test probe(s) from the ground surface to the termination depth. The torque readings must be taken with calibrated equipment such as a certified drive head and calibrated pressure gauges or by using a calibrated torque transducer in line with the drive tooling. The depth of investigation would be similar to that described above, i.e., 5 to 10 feet below the anticipated termination depth of the production piles. A general understanding of the soil profile and depth to groundwater may be required to back-calculate soil strength from a helical test probe. The proposed number of helical test probes for a given project is dependent upon the project characteristics and the variability of site soil conditions. Factors of safety greater than 2.0 must be considered when the helical pile/anchor design is based solely or in large part on the results of helical test probes. The following information is required when evaluating the results of helical test probes: make and model of the drive head, calibrated torque readings, test probe shaft size, and test probe helix plate configuration. For push pier projects, the installation of a test push pier typically provides sufficient information for a push pier preliminary design.

5. Perform a load test. If site access allows the setup of a load test frame, the results from compression or tension load tests can determine helical pile or anchor capacity without soil information. The required number of load tests would again be dependent upon project characteristics and should be determined by design professionals. The helical piles or anchors used for the load test(s) shall be installed with calibrated equipment

© 2024 Supportworks®
All Rights Reserved

so the true installation torque is known. The load tests should be performed in general accordance with applicable ASTM standards. A site-specific torque correlation factor can be determined from the results of the load test(s), which would then allow the final installation torque readings to be used for pile capacity verification.

Helical piles, helical anchors, and hydraulically driven push piers are installed routinely on residential projects without adequate site-specific soil information available. The homeowner is often unwilling to pay for deep soil borings, laboratory tests and recommendations from a geotechnical consultant. In these cases, the installing contractor typically proposes a specific pile or anchor system with depth/length and product spacing based upon experience from doing previous work in the area. The contractor then follows rules-of-thumb guidelines for installation.

Foundation Supportworks offers a software tool called "Foundation View" to assist its installing contractors in estimating structural residential loads and spacing of retrofit piers. This program assumes that the soils are capable of providing adequate support to the piering system in order to achieve its full rated allowable capacity with a suitable factor of safety. The contractor should request that adequate soil information be provided, or have at least some general knowledge of the local and/or site-specific soil conditions to reduce potential risks associated with unknowns or unforeseen conditions.

DISCLAIMER

The information contained in this document is provided for design professionals, contractors, owners and Foundation Supportworks installing contractors to assist in the application of Foundation Supportworks products. Copying or distributing all or part of this document for any other purpose, without the prior, written consent of Foundation Supportworks, is expressly forbidden.

The guidelines provided in this document are not intended to become part of bid specifications, proposals, requests for proposals, or to override the requirements of appropriate national, state, or local regulatory agencies, or the recommendations of qualified design professionals. Due to the wide variation in building codes, regulations and rules that apply to construction between regions and countries, Foundation Supportworks engineers should not be relied upon for and shall not be responsible for the development or approval of final design documents. Development and submittal of final design documents shall be completed by a professional engineer licensed in the state of the project.

© 2024 Supportworks®
All Rights Reserved

POLICY FOR AXIAL COMPRESSION OR AXIAL TENSION LOAD TESTS ON HELICAL PILES & ANCHORS

Foundation Supportworks is equipped and staffed to provide our contractor network with the necessary equipment, support, and assistance for completing axial compression and axial tension field load tests on helical piles and anchors. Given our investment in time and resources to provide this level of support, we ask that all parties communicate, understand and be in agreement with the statements outlined in this document. This document is intended to set realistic expectations of our involvement in such projects and to guide the installing contractor, the general contractor, the design team, and the owner through the load test process. The design team member in charge of the load test is hereafter referred to as the "engineer of record". Ultimately, our goal is to bring all possible positive results to fruition in the various steps of the load test process, while maintaining reasonable costs and minimizing frustrations. Please contact the Foundation Supportworks Engineering Department should any questions arise or special circumstances require consideration.

Foundation Supportworks Field Staff Responsibility

1. Foundation Supportworks field staff may act in an advisory capacity for the installation of test piles, test anchors and reaction piles and also oversee setup of the load test frame and test equipment.

2. Upon request by the installing contractor or engineer of record, Foundation Supportworks field staff will advise or train personnel in recording load and deflection readings during the load test, or otherwise assist in data collection.

3. Foundation Supportworks field staff does not interpret load test results nor do they offer opinions concerning pass/fail criteria. The load test information must be forwarded to the Foundation Supportworks Engineering Department for evaluation if interpretation has been requested.

4. Foundation Supportworks assumes no responsibility, economically or otherwise, should the load tests fail to achieve the desired results.

5. Foundation Supportworks is not responsible for site safety issues and shall not be held liable for any breach in site safety protocol. If Foundation Supportworks representatives feel site safety procedures are not followed or are inadequate, said representatives have the authority to immediately terminate the field load test oversight services.

© 2024 Supportworks®
All Rights Reserved

Qualifications for Foundation Supportworks Engineering Involvement with Field Load Tests

1. The Foundation Supportworks Engineering Department may provide a preliminary design recommendation and/or a document review prior to the test pile/anchor installation. Project specifications, test loads, applicable failure criteria, and adequate subsurface information must be provided in order to develop the preliminary design recommendation.

2. Foundation Supportworks engineers shall be provided an open line of communication with the project design team, including owners, architects, engineers, and contractors during the preliminary design phase and throughout the load test process.

3. Foundation Supportworks engineers shall have access to all documents and information relating to the load test and the load test results, including project specifications, test loads, failure criteria, subsurface information, installation field logs for all test piles/anchors and reaction piles, calibrations of test equipment, and field logs of load tests.

4. The engineer of record understands and considers opinions and recommendations by Foundation Supportworks engineers regarding options to proceed in the event of unsatisfactory load test results.

Foundation Supportworks Engineering Role & Limitations

1. The Foundation Supportworks Engineering Department acts in an advisory capacity only, whether in preliminary design, on-site issues and adjustments, use of Foundation Supportworks products and equipment, or interpretation of load test data.

2. Foundation Supportworks engineers assume no liability in the event that capacity is not achieved, piles/anchors require increased depth or length, or a revised helix plate configuration is needed.

3. Foundation Supportworks and its representatives reserve the right to refuse participation in any preliminary design, project review, or field load test operation at its discretion.

Review of Load Test Data

1. Upon request of the installing contractor or the engineer of record, Foundation Supportworks engineers may offer opinions and recommendations regarding the results of the load test. The field installation logs for the test pile/anchor and reaction piles, the test pile/anchor deflection versus load measurements, and all other applicable information should be scanned and emailed to the Foundation Supportworks Engineering Department at the earliest opportunity to allow adequate time for review.

2. Please allow at least 24 hours per test from the time of submittal of the field logs for Foundation Supportworks engineers to evaluate the information and offer an interpretation and opinion of the load test results. If the information submitted is incomplete or illegible, additional time may be required for interpretation of data.

© 2024 Supportworks®
All Rights Reserved

Suggested Installation Procedure for Test Piles/Anchors, Reaction Piles & Load Frame

1. If Foundation Supportworks engineers will be involved with interpretation of load test data, the following information shall be provided prior to installation of the test pile/anchor and reaction piles: make and model of installation equipment with ratings for hydraulic fluid pressure and flow rate; make and model of the drive head; method of torque monitoring with any back-up information and/or calibrations, expected ultimate pile capacity, and the load test failure criteria. Provide same information to engineer of record for review and approval.

2. In the event that no soil information or inadequate soil information is provided, it is recommended that helical test probes be installed on the proposed site to a depth at least 10 feet beyond the anticipated pile tip depth using calibrated torque monitoring equipment. See Geotechnical Investigation Guidelines in *Appendix 1F* for helical test probe installation procedures.

3. It is highly recommended that field installation torque/differential pressure recordings be logged in 1-foot increments for the test pile/anchor and reaction piles. At a minimum, torque/differential pressure readings must be recorded on 5-foot intervals up to the last 10 feet of installation, where then 1-foot interval readings are required to the termination depth. Field installation logs shall further note depths and magnitudes of high torque/pressure spikes, apparent encounters with obstructions, or any other difficulties in advancing the helical piles.

4. Test piles/anchors and reaction piles shall be installed as close to vertical and plumb as possible, unless battered or angled elements will be tested. Maintain installation speed under 25 rpm during installation of the test and reaction piles. Installation speed should be further reduced to 10 rpm or less for the final 3 to 5 feet of installation or when there is a risk of abruptly exceeding the torque rating of the helical shaft.

5. The test frame shall have an allowable structural capacity greater than the maximum test load. The test frame reaction piles shall have a combined ultimate soil capacity at least two times the anticipated maximum test load. The maximum test load shall be determined by multiplying the service load by the appropriate factor of safety. Ultimate soil capacities for reaction piles are determined by multiplying the installation torque by the applicable default torque correlation factor.

6. The test frame shall be installed with the main beam centered over the test pile. The main beam and the reaction beams shall be as close to horizontal (level) as possible and the reaction piles shall be as close to vertical as possible.

7. Tests procedures should generally follow ASTM D1143 (Compression) and ASTM D3689 (Tension). Criteria for evaluating the ultimate capacity of the pile is provided in AC358, Acceptance Criteria for Helical Pile Systems and Devices, by the International Code Council Evaluation Service, Inc. (ICC-ES). Alternative failure criteria may be proposed by the engineer of record. Such criteria must be provided to the Foundation Supportworks Engineering Department prior to installation of the test piles/anchors and reaction piles.

© 2024 Supportworks®
All Rights Reserved

Load Test Communication & Responsibilities

1. A representative of the engineer of record or the owner should be on site prior to initiation of the load test and should remain through completion of the test cycles.

2. When an extended or long-term test is required, procedures and data recording should be detailed by the engineer of record.

3. The engineer of record, the owner, or the owner's representative shall have the opportunity to physically read dial gauges and record measurements.

4. The engineer of record and the Foundation Supportworks Engineering Department shall be provided with a copy of the proposed test pile/anchor installation procedures and load test procedures for review and comment prior to the start of any site work.

Foundation Supportworks Travel & Expenses

1. Foundation Supportworks has a vested interest in the success of all installing contractor load test operations and offers field assistance when necessary to support its contractor network. Foundation Supportworks typically requires the installing contractor to pay travel costs and expenses for Foundation Supportworks representatives to travel to the project site to provide support. In special cases, Foundation Supportworks may choose to assume some or all of the travel costs and expenses for the Foundation Supportworks representative to be on site for the load test. In the event that the installing contractor fails to be prepared to a reasonable degree and this contributes to extensive delays and extended or repeat trips, Foundation Supportworks reserves the right to pass additional costs on to the installing contractor. Proper communication and organization should prevent unnecessary costs that are within control.

© 2024 Supportworks®
All Rights Reserved

CHAPTER 1

REFERENCES

REFERENCES

Adams, J. I., & Klym, T.W. (1972). A Study of Anchorages for Transmission Tower Foundations. Canadian Geotechnical Journal, 9(1).

Bjerrum, L. (1957). Norwegian experiences with steel piles to rock. Geotechnique, 7, 73-96.

Cadden, A., & Gomez J. (2002). Buckling of Micropiles; A Review of Historic Research and Recent Experiences. ADSC Micropile Committee, 18.

California Department of Transportation. (1999). Manual of Instructions for SNAILZ. Sacramento, CA: CALTRANS

Davisson, M. T. (1963). Proceedings of the 2nd Pan-American Conference on Soil Mechanics and Foundation Engineering: Estimating buckling loads for piles. Brazil.

Deardorff, D. A. (2007). Proceedings from Deep Foundations Institute 32nd Annual Conference on Deep Foundations: Torque Correlation Factors for Round Shaft Helical Piles. Colorado Springs, CO.

Federal Highway Administration, (2014), SNAP-2 (Soil Nail Analysis Program) User's Manual, Siel, Barry D.

Federal Highway Administration. (2015). Geotechnical Engineering Circular No. 7 - Soil Nail Walls. Washington D.C.: Lazarte, C.A., Elias, V., et al.

Golder (1996). GoldNail User Manual. Redmond, WA, Golder Associates: 34.

Hoyt, R. M., & Clemence, S.P. (1989). Proceedings from 12th International Conference on Soil Mechanics and Foundation Engineering: Uplift Capacity of Helical Anchors in Soil. Rio de Janeiro, Brazil.

Lutenegger, A. J., & Smith, B.L., et al. (1988). Proceedings of the Conference of Special Topics in Foundations: Use of In Situ Tests to Predict Uplift Performance of Multihelix Anchors. Nashville, TN, ASCE.

Meyerhof, G. G. (1976). Bearing Capacity and Settlement of Pile Foundations. Journal of the Geotechnical Engineering Division, Proceedings of the American Society of Civil Engineers, 102(GT3), 197-227.

Mitsch, M. P., & Clemence, S.P., (1985). Proceedings of a session sponsored by the Uplift Behavior of Anchor Foundations in Soil: Geotechnical Division of the American Society of Civil Engineers: The Uplift Capacity of Helix Anchors in Sand. Detroit, Michigan, ASCE.

Reese, L., & Wang, T., et al. (2004b). A Program for the Analysis of Piles and Drilled Shafts Under Lateral Loads. (Version 5.0). [Software]. Austin, Texas: ENSOFT, Inc.

Romanoff, M. (1989). Proceedings from National Association of Corrosion Engineers: Underground Corrosion. Houston, TX. (Republished from National Bureau of Standards Circular 579, 1957).

© 2024 Supportworks®
All Rights Reserved

CHAPTER 2

Hydraulically Driven Push Pier Systems

2.1 History

Commonly referred to as push piers, jacked piles, resistance piers, or hydraulically driven piers, these systems were developed to stabilize existing buildings against further settlement and/or to provide additional foundation support. Push pier systems have patent history dating back to the late 1800s and had their early beginnings in the populated areas of the northeast United States (US). Several inventors from New York were the pioneers of these systems, and utilized a common methodology of pushing hollow, tubular iron columns in sections to a suitable load bearing stratum. They are considered retrofit systems since they require an existing structure to provide the reaction necessary to push or drive the piers to competent soils. These early pier systems were typically installed beneath opposing sides of a building wall (staggered or in pairs), or directly beneath the center of the wall.

Jules Breuchard patented the first push pier system in the US (Patent No. 563,130) on June 30, 1896, which specified removal of portions of brick foundation walls to allow for placement of structural "headers" (stone or steel) and setup of the drive equipment (*Figure 2.1*).

The drive equipment (or "ram") would push steel piling sections against the upper header beam using the weight of the structure until the desired resistance was achieved. The top of the pier would then be shimmed with brick or other structural elements to another header beam located across the bottom of the foundation opening. The space between the structural headers would then be refilled with brick and mortar. The first application of this system was in New York City in 1896. The piers supported a 4-story building during the excavation and construction of the basement level of the new Commercial Cable Building on the adjacent property. Nine piers were installed along a 57-foot long wall to allow excavation to a depth of about 10 feet below the underpinned structure. The piers were manufactured from 10-inch outside diameter (O.D.) pipe with a ⅝-inch wall thickness. Five-foot lengths of pipe were pushed to depths of about 33 feet using a 60-ton hydraulic ram to its full capacity. External couplings were used to maintain direct bearing of the pier sections. An internal coupling was first patented by Francis Pruyn (US Patent No. 1,188,485) on June 27, 1916. This internal coupling concept allowed for a premanufactured connection with the same diameter as the pier pipe (*Figure 2.2*).

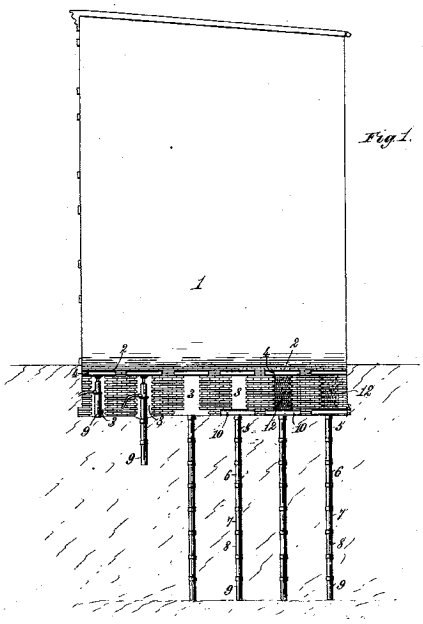

Figure 2.1 Breuchard patented system (1896)

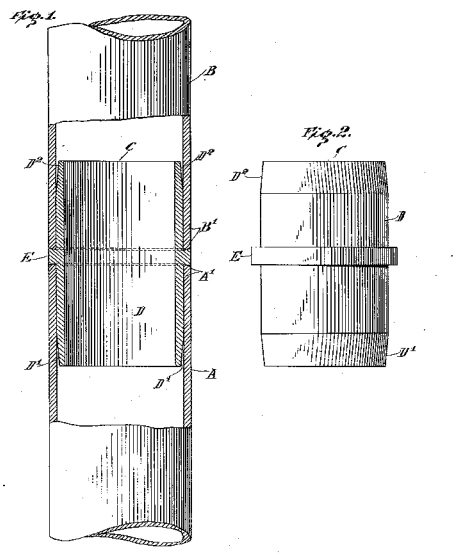

Figure 2.2 Pruyn patented internal coupling (1916)

© 2024 Supportworks®
All Rights Reserved

The Breuchard system did not specify a factor of safety to be applied to the service loads and some problems resulted from underperformance of the piers after construction. The first patented push pier system to recommend a factor of safety was registered by Lazarus White (US Patent No. 1,217,128) on February 20, 1917. Specifically, the language in the patent recommends a final drive load about 50 percent greater than the service load applied to the pier, which equates to a factor of safety of 1.5 against pier settlement. This patent also describes using a pressure gauge within the hydraulic system to monitor final drive and lock-off pressures. The White patent detailed geotechnical considerations, including pier rebound, and provided a drawing of the assumed pressure bulb formed under the pier tip upon loading (*Figure 2.3*). In a later patent registered on October 20, 1931 (US Patent No. 1,827,921), Lazarus White recommended application of the drive force to each pier individually and then simultaneous loading of all piers to evenly distribute structural loads during lock-off procedures. Mr. White also suggested that previous performance problems with push pier systems may have been due to overlap of the assumed stress bulbs for closely spaced piers, which he believed could be mitigated by using simultaneous loading during lock off.

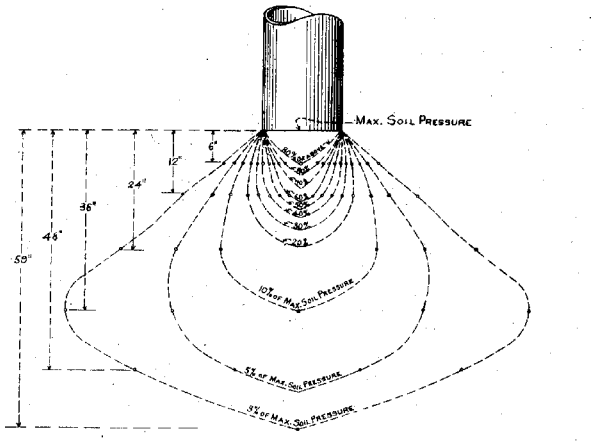

Figure 2.3 Assumed stress bulb under push pier tip (White, 1917)

An eccentrically loaded flush-mount bracket system was presented in the Henry Revesz and Jack Steinsberger Patent (US Patent No. 2,982,103) registered on May 2, 1961. This system had many similarities to current flush-mount pier systems, including attachment of a flush-mount pier bracket to a foundation wall and using a drive stand and hydraulic ram to provide the final drive and lock-off forces. This patent also recommended applying a factor of safety of 1.5 to the service load to determine the required final drive load. The components and setup of this system are shown in *Figure 2.4*.

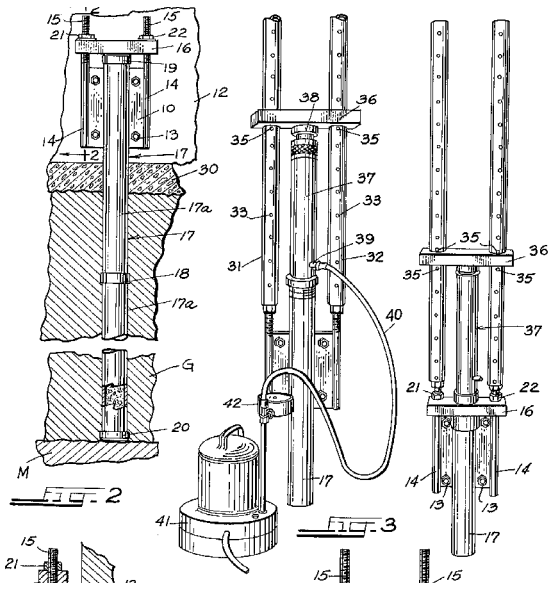

Figure 2.4 Revesz and Steinsberger flush-mount push pier system (1961)

The first patent for a side-load, under-footing bracket with vertical and horizontal bearing plates positioned against and below a footing was issued on September 2, 1975 to George Langenbach (US Patent No. 3,902,326). The system was further refined in subsequent patents to resemble the eccentric push pier systems common today. The ingenuity of these early inventors paved the way for the development of numerous push pier systems and an industry that has grown dramatically since the 1970s. Manufacturers and installers of underpinning systems continue to provide innovative solutions capable of ever-increasing load capacities and improved system performance. Systems designed by reputable manufacturers, installed by experienced foundation repair contractors, and with a proven record of performance have become widely accepted throughout the engineering community.

© 2024 Supportworks®
All Rights Reserved

2.2 Summary Description

Foundation Supportworks push pier systems utilize high-strength round steel tubes and a load transfer bracket (retrofit foundation repair bracket) to stabilize and/or lift sinking or settling foundations, or to provide additional capacity to existing foundation systems. The foundation bracket is secured against and below the existing footing (under-footing bracket), directly beneath the footing and foundation wall (concentric bracket), to the side of the footing or foundation wall (flush-mount bracket), or below existing slabs (slab pier bracket). Pier sections are then hydraulically driven through the bracket and into the soil below using the combined structural weight and any contributory soil load as drive resistance. The one exception to this typical installation process is the concentric pier system. Concentric pier sections are driven without the foundation bracket in place. When the pier has met termination criteria, the drive stand is removed and the concentric pier bracket is set over the installed pier.

Pier sections are added and driven until a suitable load bearing stratum is encountered. At that point, the structure either begins to lift or the target pressure/load is achieved. The weight of the structure is then transferred to the foundation brackets, through the piers, and to firm load bearing soil or bedrock. Typical under-footing, concentric, flush-mount, and slab pier brackets are shown in *Figure 2.5*. A Model PP288 push pier installation is shown in *Figure 2.6*.

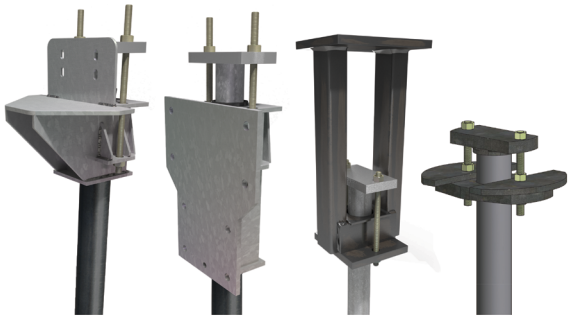

Figure 2.5 Left to right; typical under-footing, flush-mount, concentric pier, and slab pier brackets (no relative scale)

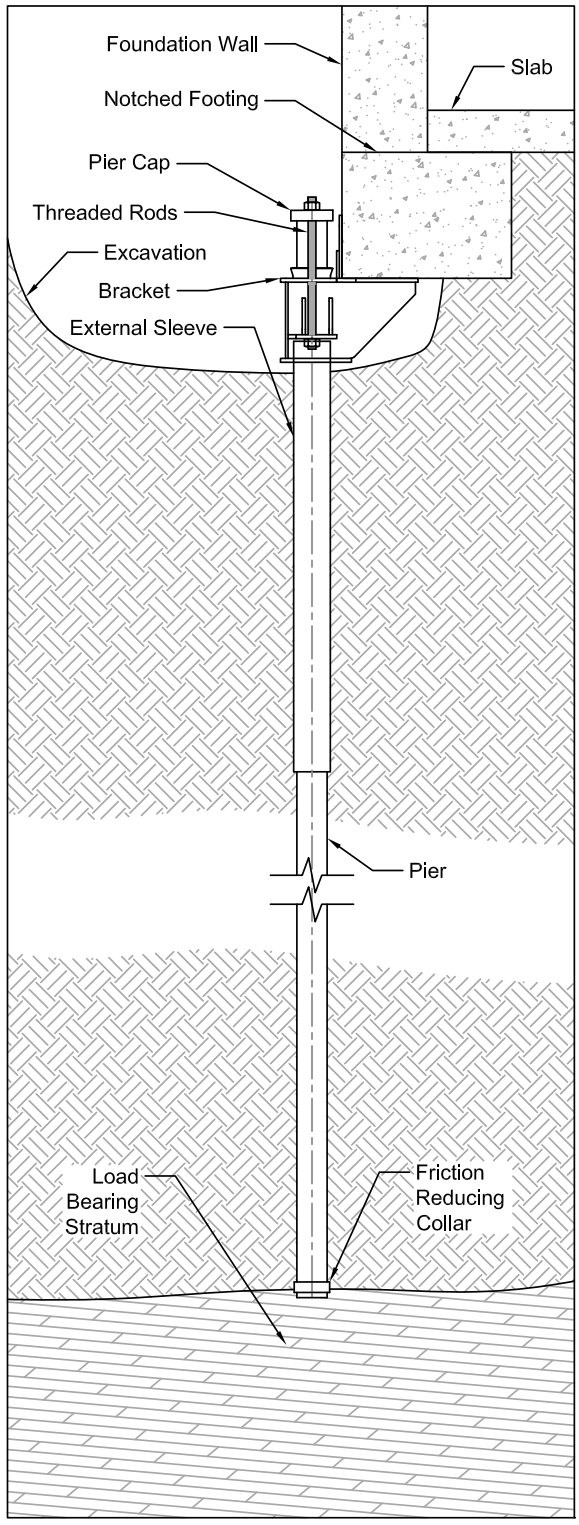

Figure 2.6 Foundation Supportworks PP288 push pier system with an under-footing bracket

© 2024 Supportworks®
All Rights Reserved

2.2.1 Applications

Push pier systems are typically used for underpinning existing structures in the following applications:

- To stabilize settled foundations or slabs
- To stabilize and lift settled foundations or slabs
- To provide increased capacity (additional support) for existing foundations or slabs
- To provide foundation support while adjacent excavations are made

2.3 Push Pier System Components

Foundation Supportworks push pier system components are manufactured to high quality control standards using American Society for Testing and Materials (ASTM) grade steel and certified welding processes. The product line includes Models PP237, PP288, and PP350, corresponding to shaft sizes of 2.375-inch, 2.875-inch, and 3.50-inch O.D., respectively. Various external sleeve and bracket options are available. Push pier system capacities and specifications are provided in *Appendix 2A*. Refer to Sections 2.3.1 thru 2.3.3 for additional discussion regarding push pier system components.

2.3.1 Bracket Assemblies

Bracket assemblies may include an under-footing bracket, concentric bracket, flush-mount bracket or slab bracket. Under-footing brackets are typically placed against and below the footing and have both vertical and horizontal bearing plates. Under-footing brackets have been designed to allow piers to be driven vertically, or at 2 or 3 degrees from vertical orientation. Two-degree brackets, standard for the PP237 push pier system and used most often with the PP288 push pier system in residential applications, and three-degree brackets which are most often used with the PP350 system for commercial applications, can be positioned beneath foundation walls as much as practical and still provide separation for the drive stand and drive cylinder to miss brick overhangs and window and door trim. Vertical brackets are typically used on opposing sides of column footings and along residential and commercial wall footings where structural details do not obstruct setup of the drive stand and drive cylinder. Independent testing of the PP288 and PP350 push pier systems with the 2-degree, 3-degree and vertical brackets has shown less than 1 percent capacity difference between the canted and vertical brackets. PP288 concentric brackets are positioned beneath the centerline of the footing and foundation wall and are pressed up against the bottom of the concrete footing. PP288 flush-mount brackets have a vertical “bearing” plate anchored to the vertical concrete face of the footing, grade beam, or foundation wall with wedge anchors or adhesive anchors. PP288 slab pier brackets are plate assemblies constructed under the concrete floor slab via holes cored in the slab. Pier sections driven through flush-mount and slab pier brackets, or for use with concentric pier brackets, are in a vertical orientation only. The PP350 push pier system utilizes either a 3-degree or vertical under-footing bracket. The Foundation Supportworks bracket assemblies generally include the bracket, pier cap, external sleeve and associated hardware. However, the PP288 concentric pier system and the PP288 slab pier system are designed without external sleeves. See *Appendix 2A* for mechanical ratings of the various push pier systems and bracket assemblies.

© 2024 Supportworks®
All Rights Reserved

Pier tubes of push pier systems utilizing under-footing and flush-mount brackets are not located directly under the structure's footing. Therefore, these systems are eccentrically loaded and in turn need to resist the bending forces generated by this loading condition (*Figure 2.7*). The eccentricity generated by under-footing and flush-mount bracket systems is in reality shared by the pier and the structure.

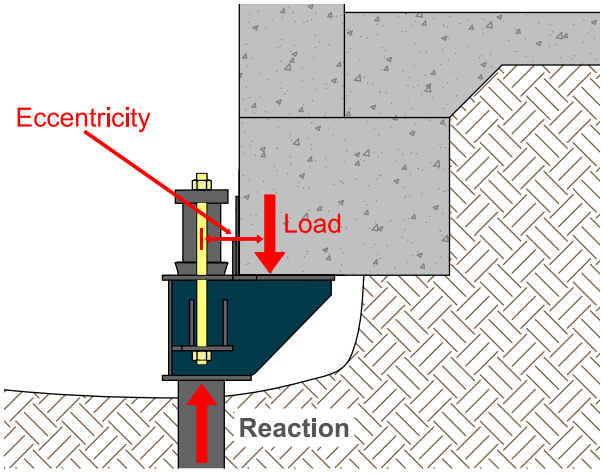

Figure 2.7 Eccentric loading condition for under-footing bracket

In general, the more rigid the pier system and its connection to the foundation, the more the system acts as an extension of that foundation and the more eccentricity must be absorbed by the structure. This bending or twisting imparted to the structure can be resisted by the internal strength of the foundations and connections to the superstructure, by passive resistance of the soil along the opposite face of the footing and/or foundation wall, by bracing with internal structural elements such as floor slabs and shear walls, and by support generated at building corners. When the eccentricity cannot be resisted by such conditions, the piers can be staggered or paired on opposing sides of the foundation. Multiple piers are often needed at column locations simply to balance the load and prevent tipping of the footing. Evaluation of the eccentric loading condition on the structure should be completed by a qualified design professional on a case-by-case basis.

Overall dimensions of a push pier cross section are 4 inches or less in most applications. These sections are therefore very sensitive to the bending moments introduced by eccentric loading. Additionally, as pier bending moments increase, the pier axial capacity will decrease. This loss of axial capacity due to the addition of bending stresses can be demonstrated with the following example. A given pier section with a 3.50-inch O.D., 0.300-inch wall thickness and a yield strength of 35 ksi has a maximum allowable compressive capacity of 59.3 kips according to the American Institute of Steel Construction (AISC) Allowable Stress Design methodology. When a bending moment of 40 kip-in is applied to the same section, its allowable compressive capacity drops to 24.7 kips. This is a reduction of nearly 60 percent of the section's full axial capacity. Furthermore, this moment would equate to an equivalent eccentricity of only 1.62 inches, which is a seemingly small eccentricity and is still within the envelope of a typical pier cross section. Since, eccentricities for under-footing bracket systems are generally within the range of 3 to 4 inches, the loss of axial capacity due to the resulting bending moments is a significant design consideration.

The bending moment created by eccentric loading is dissipated by passive resistance of the soil against the pier tube within the first few feet of soil support, therefore, the bending moment only needs to be considered for the pier tubes directly below the bracket. One method of providing the necessary bending resistance could involve using larger diameter and/or thicker pier tube sections for the entire length of the pier. The larger/thicker pier sections would resist bending, yet still have sufficient axial capacity in reserve. Although a seemingly reasonable approach, it is not an economical one since the extra steel is only useful within the region of bending, i.e., the first few

© 2024 Supportworks®
All Rights Reserved

feet below the bracket where the bending moment is dissipated into the surrounding soil. Another method used by many manufacturers is to utilize internal or external pier reinforcement after the pier has been exposed to the final drive force. Internal reinforcement is simply smaller diameter pipe or tube sections set inside the pier, generally spanning between the internal couplers of the pier shaft. Internal reinforcement can be of inconsistent length and may not be placed at the optimal location, i.e., not extending through and below the bracket, since the final coupler location cannot be estimated or predetermined. Also, internal reinforcement is not generally placed until after the final drive load has been applied, when the maximum bending moment may have already caused the pier shaft to deform or buckle. There is little chance for success when trying to insert a straight pipe section through a bent pier tube. External reinforcement typically consists of larger round or square hollow sections driven or placed around the pier, again after the pier has been exposed to the final drive force. Similar challenges exist with placement of straight external reinforcement elements over a bent pier.

Foundation Supportworks engineers developed a unique approach to address the issue of eccentric loading on retrofit push pier systems... the external sleeve.

2.3.1.2 External Sleeve

The PP237, PP288 and PP350 push pier systems incorporate a 48-inch long external sleeve to resist the bending forces generated by the eccentric loading condition on the under-footing and flush-mount brackets, thereby preserving the axial capacity of the pier sections (*Figure 2.8*). The external sleeve is hydraulically driven with and around the pier starter tube section to extend through and below the bracket. The effect of the sleeve essentially creates a bracket that is 48 inches tall without any additional excavation. A 30-inch long external sleeve is available for the PP237 and PP288 push pier systems for use in limited headroom and crawl space applications.

The moment or bending force is localized within a relatively short distance below the bracket. Although the bending force is dissipated quickly by the pier bearing against the confining soil, it is significant and cannot be ignored. The depth or length of sleeve and pier over which the bending force dissipates is a function of the soil stiffness. The depth is greater in soft clay and loose sand, and less in stiff clay and dense sand. Finite element analysis software was used to analyze how the external sleeve and the pier interact with soils of various properties. Bracket rotation is resisted not only by the rigidity of the pier system, but also by the passive pressure of the soil surrounding the external sleeve and pier. Therefore, the capacity and performance of the pier system is in part governed by the stiffness of the confining soils.

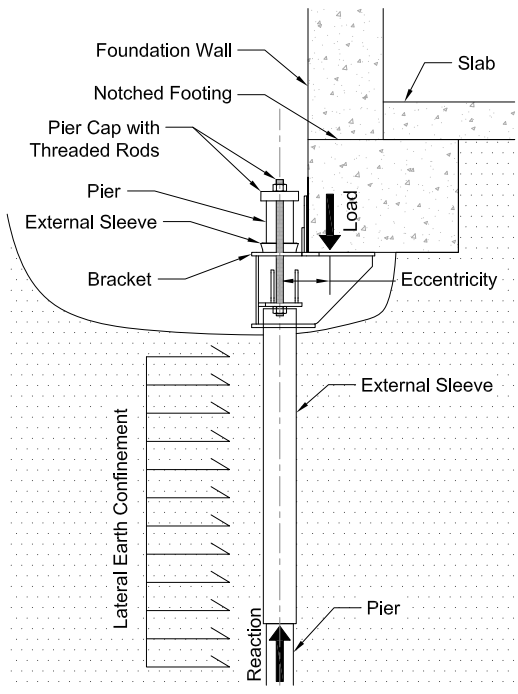

Figure 2.8 External sleeve and pier bear against confining soil when system is under load

© 2024 Supportworks®
All Rights Reserved

Benefits/advantages of an external sleeve:

- The sleeved system separates bending forces from axial compression forces.
- The sleeve resists most of the bending forces and behaves purely as a beam.
- The pier tube is protected from the bending forces preserving its axial capacity so it can behave more like a column.
- The sleeve is easy to install. It's driven at the same time as the starter tube.
- There is no cumbersome reinforcement to install after driving pier tubes.
- The extra steel is where it needs to be. Much more efficient than using thicker pier tube sections for the entire length. It's a local solution to a local issue.
- The sleeve is in place during the system's maximum load (while driving pier tubes).
- The sleeve relieves friction between the pier bracket and pier tube. Drive and lift pressures more accurately reflect the load on the pier system.
- The final pier tube is protected from bending during application of the final drive force, allowing easy removal for cutting to the proper length and reinstallation.

2.3.2 Starter Tube

The starter tube is the first pier section pushed into the ground and is installed at the same time as the external sleeve, where applicable. Under-footing, concentric and flush-mount bracket systems utilize a friction reduction collar at the bearing end of the starter tube. The friction reduction collar will be discussed in more detail in the following section. Models PP237 and PP288 starter tubes come in standard lengths of 17, 32 and 50 inches. The PP288 concentric pier uses 17-inch long starter tubes and 18-inch long pier tubes to fit within the system's unique drive stand assembly. The 32-inch starter tubes are used in limited access and low headroom applications, such as within a crawl space, along with a modified (shorter) drive stand, shorter drive cylinder, a 30-inch long external sleeve and 18-inch long pier tubes. The PP350 system uses a 50-inch long starter tube only, to coincide with the standard 48-inch long external sleeve. The PP350 is a higher capacity system and generally not ideal for crawl space applications. The PP288 slab pier system does not utilize a starter tube with a friction reduction collar. The first section advanced consists of a field-modified standard pier section (*Section 2.12)*.

© 2024 Supportworks®
All Rights Reserved

Figure 2.9 PP288 starter tubes with pressed fit and welded friction reduction collars

A friction reduction collar is included at the bearing end of push pier system starter tubes (*Figure 2.9*). This collar consists of a 1-inch long slice of a slightly larger round shaft section slid over and welded to the end of the starter tube, or a machined ring with a pressed fit. These friction reduction collars have outside diameters ½-inch larger than their respective pier sections and serve to either create annular space or remold the soil around the pier shaft as it is advanced through the soil. The reduction in frictional resistance on the outside surface of the pier results in a driven pier that generates most of its capacity in end bearing. With reduced skin friction and high bearing pressures generated at the pier tip, push pier systems with friction reduction collars also generally penetrate deeper into the ground (than a frictional pier) and advance through weak or marginal soils to bear on competent material below.

It is common to think of push piers as being advanced through overburden soils to bear on bedrock. This may or may not be the case. For residential and light commercial projects with light to moderate pier loads, adequate resistance may be achieved within very stiff to hard clay soils or medium dense to dense sand and gravel. Allowable pier capacities of 15 to 20 kips, with a factor of safety of 1.5, may be achieved in soils having standard penetration test N-values around 30 blows per foot. Higher strength soils or rock would therefore be required to develop higher pier capacities.

© 2024 Supportworks®
All Rights Reserved

The soils displaced or remolded by the friction reduction collar "heal" back around and against the shaft over time, generating an additional frictional component to the pier's capacity. This effect is often referred to as pile "setup" when driving larger, higher capacity pipe piles or H-piles. Setup can occur within a matter of hours, days or weeks, and is the reason piering contractors generally try to start and finish installation of a push pier the same day and, in some unique conditions, before a work break is taken. Although this frictional capacity can be significant, it is conservatively ignored in most cases in the determination of the pier's factor of safety against settlement. The final drive force is measured and documented prior to development of the soils ultimate frictional resistance. Push pier system factors of safety are further discussed in *Section 2.8.1*.

2.3.3 Pier Tube

Pier tubes follow the starter tube during installation and have a crimped, slip-fit internal coupling at the leading end (*Section 2.3.3.1*). The push pier tubes and couplings are manufactured from hollow round structural steel sections. Models PP237 and PP288 push pier tubes are available in standard lengths of 18 and 36 inches. The 18-inch long pier tubes are again used for concentric piers and limited headroom or crawl space applications. Model PP350 pier tubes are available in standard lengths of 36 inches only.

2.3.3.1 Coupling

Pier tube sections are coupled with an internal slip-fit connection (*Figure 2.10*). A hollow round shaft section with an outside diameter smaller than the inside diameter of the respective pier tube is crimped (button punched) or plug welded to the leading end. The internal coupler extends one-half its length inside the pier tube and one-half its length beyond the end to maintain direct bearing of the pier sections. The coupling is not pinned or bolted and is therefore generally considered and utilized for compression applications only.

Figure 2.10 Push pier tube coupling

© 2024 Supportworks®
All Rights Reserved

2.4 Benefits

Some of the benefits of hydraulically driven steel push pier systems versus other underpinning systems may include:

- Premanufactured components increase the quality control of the installed system
- Components available with zinc coating for additional corrosion resistance
- Laboratory testing of the push pier system and components verifies the system capacity
- Eccentricity between the shaft and bearing area is minimized to reduce the bending moment transferred to the pier system, allowing superior performance when stabilizing or lifting the structure
- Drive and lock-off forces easily determined using hydraulic pumps and cylinders
- Documentation of the final drive force and lock-off force is used to verify a factor of safety at each pier location
- Essentially, a proof load test is completed for each pier installation
- End-bearing pier is driven deep through problem soils
- Additional skin friction develops after installation, increasing the factor of safety against pier settlement
- Steel reinforcement and grout added within hollow pier sections improves lateral capacity and pier stiffness
- Installs with portable hydraulic equipment
- Can be installed within areas of limited or difficult access
- Can be installed in areas of low overhead clearance (crawl spaces)
- Easy to install
- No vibration
- Installs quickly from inside or outside the structure
- Cost-effective solution

© 2024 Supportworks®
All Rights Reserved

2.5 Limitations

The use of push pier systems is limited to structures that have sufficient structural load and/or contributory soil load to provide adequate resistance to advance the piers to a competent bearing stratum. Push pier systems are generally considered for compression-only applications and are not considered for lateral capacity. Foundation Supportworks' published system capacities are based on the following assumptions:

- The systems should be used on structures that are fixed from translation or braced in some manner to prevent translation of the foundation.

- Concrete bearing assumes a minimum compressive strength (f'_c) of 2,500 psi. Local concrete bending and other local design checks should be evaluated on a case-by-case basis.

- The surrounding soils provide continuous lateral support with SPT N-values greater than or equal to 4 blows per foot. Piers with exposed unbraced lengths or piers placed in weaker or fluid soils should be evaluated on a case-by-case basis.

- The maximum recommended drive load is not exceeded during installation.

2.6 Corrosion Protection

Foundation Supportworks' hydraulically driven steel push pier systems have been designed following the guidelines of ICC-ES AC358 and ICC-ES AC406 for corrosion loss rates and design period (50 years).

The starter and pier tube sections used for Models PP288 and PP350 push pier systems are manufactured with a triple-layer, in-line galvanized coating. The triple-layer coating process consists of a uniform galvanized zinc coating, an intermediate conversion coating to inhibit the formation of white rust and enhance corrosion resistance, and a clear organic polymer top coating which interacts with the intermediate coating to further enhance the corrosion protection and durability. The insides of the PP288 and PP350 starter and pier tubes also have a zinc-rich coating. Although the triple-layer coating offers significant corrosion resistance, the process is not specifically recognized within AC358 and AC406. The PP288 and PP350 push pier system capacities provided in *Appendix 2A* are therefore conservatively based on corrosion losses for plain steel. The starter and pier tube sections for the PP237 push pier system are available in either plain steel or with a hot-dip galvanized coating in accordance with ASTM A123.

The Foundation Supportworks' push pier system brackets, external sleeves, and pier caps are also available as either plain steel or hot-dip galvanized (ASTM A123). The bracket hardware is electro-plated in accordance with ASTM B633.

Additional corrosion protection may be achieved by filling the pier tubes with a fluid grout or concrete mix following installation. With a dry hole and using a neat or sand mix, the grout may be gravity fed from the top of the pier. In a wet hole, to prevent segregation of aggregate, or to prevent bridging effects, the grout may be placed by tremie tube from the bottom of the pier toward the surface. Pier tubes can also be filled with concrete or grout at intervals during the installation, i.e., piers are gravity filled from the top after advancement of every one or two sections.

© 2024 Supportworks®
All Rights Reserved

2.7 Push Pier Installation Equipment

The equipment needed to first drive the piers individually and then transfer the structural load to the multiple pier locations consists of hydraulic cylinders, a hydraulic pump, a remote valve assembly (or other control device), hoses and fittings, drive stands and lift cylinder assemblies.

Safety precautions must be followed when using high-pressure hydraulics. The pressure rating of each system component must be verified prior to use to ensure that all components meet the maximum pressure rating required during the installation. Hoses and fittings should be checked periodically for damage and replaced when in question. Failure to follow manufacturer's specifications may result in equipment failure and/or personal injury.

2.7.1 Drive & Lift Cylinders

Hydraulic drive cylinders (also commonly referred to as "rams") are used to push (drive) pier sections below the existing footing or slab until the target ultimate pressure or load is achieved or until the structure begins to mobilize (lift response). Hydraulic lift cylinders are then used at each of the multiple pier locations to provide the final lock-off load for stabilization or to lift the structure, if required. Foundation Supportworks offers four drive cylinder (FS425DC, FS35CSDC, FS35DC, and CP288DC) and two lift cylinder (FS256LC and FS35LC) options. The FS35CSDC drive cylinder is a shorter version of FS35DC for use in limited headroom and crawl space applications. The CP288DC is used for concentric pier installations. Drive and lift cylinders are shown in *Figure 2.11* and *Figure 2.12*.

Drive and lift cylinder specifications are provided in *Appendix 2B* (Drive Stand Specifications) and *Appendix 2C* (Lift Assembly Specifications), respectively.

Figure 2.11 Foundation Supportworks FS35DCA drive cylinder assembly

Figure 2.12 Foundation Supportworks FS35LCA lift cylinder assembly

© 2024 Supportworks®
All Rights Reserved

2.7.2 Hydraulic Pumps

Hydraulic pumps used to drive pier tube can be electric or gasoline powered. The selection of the pump unit should take into consideration the maximum drive pressure (ultimate pier capacity) required and the rate of pier installation desired. The flow rate of the hydraulic pump will affect how fast piers can be advanced with higher flow units allowing faster pier installation. That said, gasoline pumps generally provide greater flow than electric pumps and are therefore preferred for deep foundation pier installation. Electric pumps are often recommended for the stabilization/lift operation of foundation pier installation and for both the driving and stabilization/lift operations of slab pier installation. With lower flow rates, electric pumps install piers slower and provide greater control to reduce potential overstressing of the concrete slab or footing should sudden spikes in pressure/load occur. Foundation Supportworks offers two models of electric pumps and two models of gas pumps.

The effective area of the hydraulic drive cylinder used will also have an effect on installation speed. Foundation Supportworks drive cylinders FS35DC and FS35CSDC have effective areas of 9.62 in^2 while operating in extension mode and 6.48 in^2 while operating in retraction mode. Foundation Supportworks drive cylinder FS425DC has effective areas of 14.18 in^2 and 11.04 in^2 for the extension and retraction modes, respectively. With different effective areas, the drive cylinders will have different extension and retraction rates at similar flow rates, as shown in *Figure 2.13*. Cylinders with less effective area will have faster extension or retraction rates than cylinders with more effective area at similar flow rates. The effective area of the cylinder in retraction mode is less than the effective area in extension mode due to the presence of the internal drive rod.

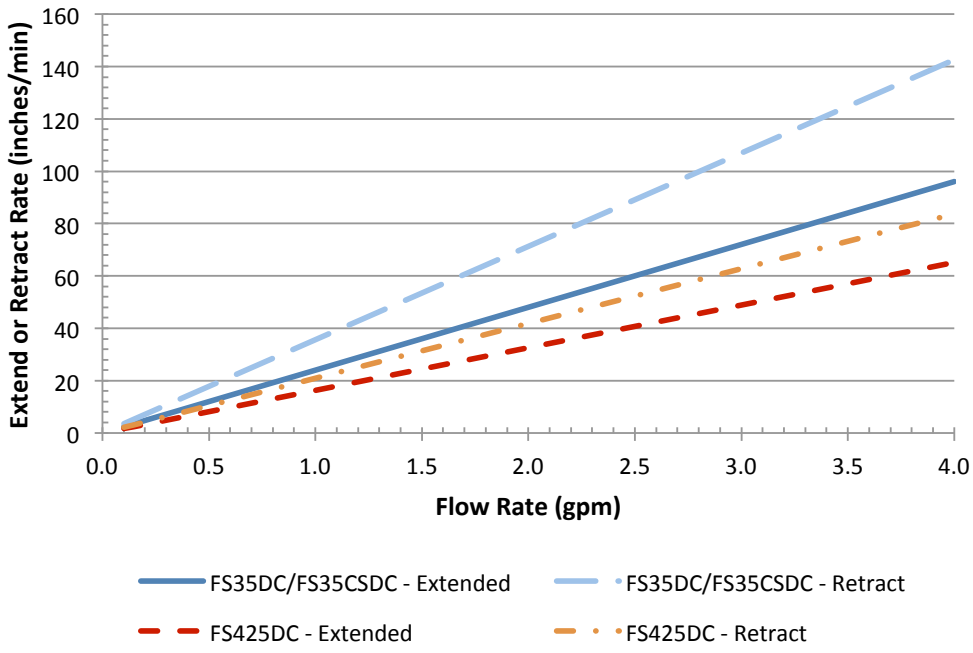

Figure 2.13 Foundation Supportworks drive cylinder extend and retract rates

© 2024 Supportworks®
All Rights Reserved

2.7.2.1 Gasoline Powered Hydraulic Pumps

FSGP5A is a single-stage gear pump driven by a variable speed, 11 HP, 4-cycle gasoline engine. Per manufacturer specifications, the pump unit is capable of a 629 in^3/min (2.7 gpm) flow rate at the maximum rated output pressure of 4,000 psi and a speed of 3,600 rpm. FSGPZG6A is a dual-stage piston pump driven by a variable speed, 13 HP, 4-cycle gasoline engine. In the first stage of operation, with an output pressure up to about 1,800 psi, the pump produces hydraulic flow of at least 850 in^3/min (3.7 gpm). The flow rate then drops significantly through the second stage of operation to 200 in^3/min (0.87 gpm) at the maximum rated output pressure of 10,000 psi and a speed of 3,600 rpm. Pump performance is affected by the output pressure and pump speed. The output pressure may also be limited by the pressure relief valve setting. The pump output flow versus pressure curves for both motors at a speed of 3,600 rpm are illustrated in *Figure 2.14*.

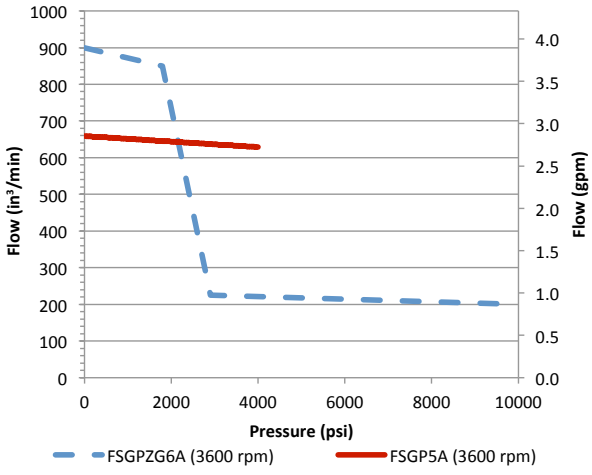

Figure 2.14 Foundation Supportworks gasoline powered hydraulic pump curves

Safety precautions must be followed when using gasoline-powered equipment. Ignition sources must be kept away from the gasoline tank and any gasoline vapor or fluid leakage must be stopped. Exhaust fumes from operation of gasoline engines require proper ventilation, particularly when used indoors or in confined spaces.

2.7.2.2 Electric-Powered Hydraulic Pump Units

The FSEPZU4A hydraulic pump is driven by a single speed, 1.125 HP, 110 volt electrical motor capable of a 60 in^3/min (0.26 gpm) flow rate at the maximum rated output pressure of 10,000 psi. The FSEP554A hydraulic pump is driven by a single speed, 1.125 HP, 110 volt electrical motor capable of a 56 in^3/min (0.24 gpm) flow rate at the maximum rated output pressure of 10,000 psi. As can be seen by the pump performance curves in *Figure 2.15*, the FSEPZU4A and FSEP554A pump units have similar flow performance above an output pressure of 1,500 psi. Again, pump performance is affected by the output pressure and pump speed and the output pressure may be limited by the pressure relief valve setting.

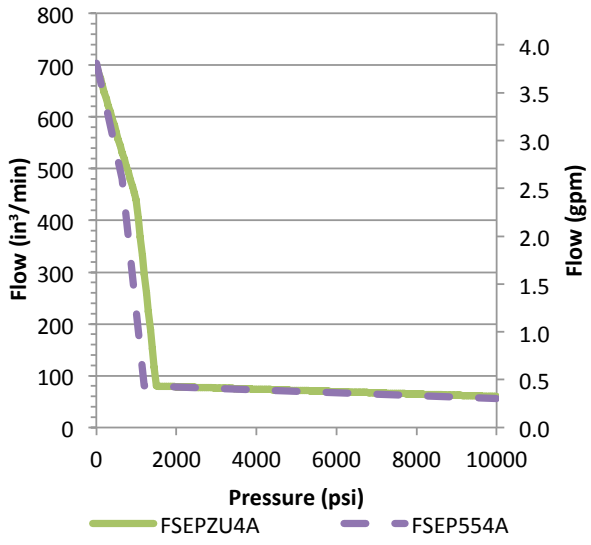

Figure 2.15 Electric Powered Hydraulic Pump Curves

© 2024 Supportworks®
All Rights Reserved

2.7.3 Remote Valve Assembly

The remote valve assembly is used to control the hydraulic fluid pressure from a gasoline pump to the drive cylinder during foundation pier and slab pier installation. The remote valve assembly is typically placed near the bracket and drive stand assembly to provide greater control and response during the driving operation. The Foundation Supportworks remote valve assembly is shown in *Figure 2.16*. The remote valve assembly is not used with an electric pump.

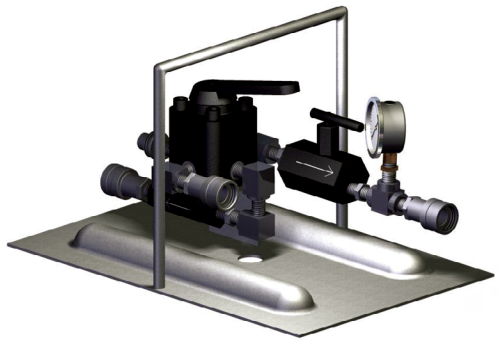

Figure 2.16 Remote valve assembly

2.7.4 Hoses & Fittings

Hoses and fittings should be designed for the maximum system pressure. Hose lengths of 10, 50 and 100 feet are available to accommodate either sequential connection of lift cylinder assemblies or connection through a manifold system. Foundation Supportworks offers both flush face and threaded fittings for the cylinder and pump connections.

2.7.5 Drive Stands

Drive stands provide the means for advancing pier tubes through foundation and slab brackets. The drive stand is positioned over and then secured to the bracket. Hydraulic drive cylinders or rams are then set within the top fixture of the drive stands. Lengths of the drive stand legs have been specifically designed for the Foundation Supportworks standard pier tube lengths of 36 inches. The drive stands used for PP237 and PP288 installation within a crawl space have shorter legs designed for 18-inch long pier sections. There are several drive stand assembly options available for the multiple pier sizes and bracket details. *Figure 2.17* shows standard and crawl space drive stand assemblies for the PP288 system. The drive stand assembly specifications, along with general dimensioning, are included in *Appendix 2B*.

Figure 2.17 Standard and crawl space drive stand assemblies for the PP288 push pier system

© 2024 Supportworks®
All Rights Reserved

2.7.6 Lift Cylinder Assemblies

Lift cylinder assemblies are connected to the thread rod or coil rod of the bracket assembly after the pier cap has been placed (*Figure 2.12*). The lift cylinder assemblies provide the final application of force to first stabilize and then lift the structure. After the stabilization or lift force has been applied, the top nuts on the thread or coil rods of the bracket assembly are tightened down to the pier cap, thereby locking off the load. See *Appendix 2C* for lift assembly specifications.

2.8 Push Pier Capacity & Spacing

Foundation Supportworks offers multiple pier sizes and bracket assembly combinations to provide solutions for varying applications and design loads. A main design consideration for eccentrically loaded retrofit systems is minimizing bracket rotation. This is accomplished not only by designing a stiffer pier system, but also by the system's interaction with the surrounding soil and the structure. *Section 2.3.1.1* and *Section 2.3.1.2* discuss the bending forces that are generated by the eccentric loading condition and how the Foundation Supportworks external sleeve resists the bending force below the bracket. The near-surface soils surrounding the bracket, the external sleeve and the upper sections of pier tube therefore act to resist and dissipate the bending. Finite element analysis software was used to analyze how the external sleeve and pier interact with various soil types and strengths. The standard 48-inch long external sleeve was thereby selected to provide an efficient use of additional steel to resist most, if not all, of the bending force when piers are installed within somewhat typical near-surface soil conditions, i.e., loose sands and medium stiff clays, or stronger. Although laboratory testing cannot exactly duplicate actual installed field conditions with all possible soil types and strengths, the results from the standard test method utilized (ICC-ES AC406) generally confirmed these calculated capacities.

Retrofit bracket testing in accordance with AC406 also considers interaction of the bracket with a concrete block of known compressive strength (2,500 psi). Testing pier systems against concrete is completely logical as it includes concrete failure as a potential failure mechanism of the "system." Bracket testing within a rigid steel frame does little to simulate field behaviors and failure conditions, and these capacities could rarely be duplicated in the field without first buckling the pier and/or breaking the concrete footing. Foundation Supportworks engineers determine push pier capacities by testing in general accordance with AC406 and, as a result, our pier systems may appear to be conservatively rated versus other published system capacities. Even so, AC406 is an appropriate test method for determining push pier system capacities, and the only standard currently available.

Push pier system ultimate capacities may be limited by the ability of the structure and surrounding soil to provide the necessary reaction to drive the piers. Light structures or structures with shallow footings may start to mobilize before the target drive load is achieved. In such cases, it may prove beneficial to excavate small, shallow holes at the pier locations, instead of a full excavation, to allow as much soil load as practical to remain around and above the footing. The soil load can contribute significantly to "hold" a light structure down in order to achieve target pressures/loads. When a structure experiences early lift, the project engineer should evaluate if the drive pressure/load is adequate, if adjustments can be made to the proposed piering plan, or if a change to retrofit helical piers should be considered. Helical piers are installed by the application of torque with machines independent of the structure. Helical piers are discussed in *Chapter 1*.

© 2024 Supportworks®
All Rights Reserved

A structural assessment should be performed prior to installation to determine if the existing footing, stem wall or floor slab can resist the estimated final drive force without structural damage. Overstressing the concrete can be prevented or at least minimized by following proper techniques and best practices for footing preparation and pier installation. The contractor should carefully monitor the installation and release the load at the first sign of foundation or slab distress.

Stone or cobble foundations, brick foundations, or foundations that are severely broken or deteriorated may not be good candidates for retrofit foundation piers. Foundations and slabs must be able to span between pier locations for the system to be effective. Pier locations and pier spacing are often determined by the spanning capability of unreinforced or under-reinforced footings, foundation walls and floor slabs, and not by the pier's capacity. Monolithic footings, footings with short stem walls or footings with masonry stem walls may require closer pier spacing and/or additional support at the bracket locations. Spanning capability of a footing may be improved by using structural steel angles, plate, tube, etc., sandwiched between the bottom of the footing and the horizontal bearing plate of an under-footing bracket. In more severe cases, such as stone, cobble, brick, and highly deteriorated foundations, the footings can be temporarily undermined in short sections to construct a continuously reinforced concrete grade beam. The grade beam would then provide adequate spanning capability for the installation of the retrofit piers.

Expansive soils are prevalent in many regions of the United States and Canada with varying degrees of shrink/swell potential. Volumetric changes (shrink/swell) occur in expansive soils from seasonal fluctuations of the natural moisture content. The depth of soil that is affected by changes in seasonal moisture is commonly referred to as the "active zone" or the "depth of wetting". Below this depth, the soil moisture content is presumed to remain relatively constant, thereby limiting any volumetric changes within the deeper strata. The geotechnical investigation may identify layers of expansive soils and swell testing may be performed on soil samples to determine the potential vertical rise (PVR) and swell pressure of the expansive zone upon wetting. When push piers are installed in expansive soil profiles, it is important to advance the piers to depths below the active zone to limit pier and structure movement.

If expansive soils are found at the project site, swell pressures determined from testing can be used to estimate the uplift force on the foundation. This potential uplift pressure, or force, must be considered when designing push pier systems. Many times, the dead load from the structure on the foundation and the installed piers is enough resistance to counteract uplift forces from swelling soils. However, in highly expansive soil profiles, the design engineer and contractor may decide to first support and level the existing structure with push piers, and then excavate the soil beneath the concrete footings. This provides a gap that would allow the soil to expand upon wetting without inducing an uplift force on the foundation system.

Push pier systems are designed for compression loading and typically do not provide tension resistance. Slip fit connections, therefore, are a common coupling detail for the pier sections. With this detail, the effect of coupling movement due to soil adhesion and swelling along the shaft in the active zone must be considered. If expansive soils are a concern, at a minimum, the geotechnical engineer should provide guidance regarding the depth of wetting, PVR and swell pressures that may be applied to the foundation. Any resulting uplift forces should be considered in the push pier design, and additional appropriate measures taken.

With all the discussion above, a push pier system can still only provide support for the structure if competent soils are encountered at the pier tip. Typically, SPT N-values of 35 to 40 blows per foot for clay soils and 30 to 35 blows per foot for granular soils are needed to provide the necessary end-bearing resistance for light

© 2024 Supportworks®
All Rights Reserved

to moderate push pier loads. See *Appendix 1F* for additional information regarding geotechnical considerations for push pier systems.

Technical specifications and capacities for Foundation Supportworks push pier systems are provided in *Appendix 2A*.

2.8.1 Factor of Safety

The push pier system develops a factor of safety against pier settlement by the pier installation methods used and the sequence with which multiple piers are driven and then reloaded. Piers are first driven individually using the maximum weight of the structure and any contributory soil load as the reaction. The pier gathers load from adjacent sections of the foundation, not just in the immediate area of the pier. The more rigid the structure, the more load can be transferred to the pier during the drive process. It is for this reason, along with consideration of contributory soil load against the foundation, that piers can be driven to loads greater than the calculated service loads.

The drive or installation force on the piers is determined by calculating the structural load (dead plus live) and the soil load on each pier, then multiplying by a factor of safety. Factors of safety of 1.5 to 2.0 are commonly used for push pier systems since the drive and lock-off loads are easily measured and verified using hydraulic cylinders, pumps and gauges. Foundation Supportworks engineers do not recommend the use of bottle jacks for the drive or lift operations of a push pier installation. Loads applied with bottle jacks are unknown and not easily determined. Higher factors of safety may be considered at the discretion of the project engineer or as dictated by local codes.

Piers are driven to the calculated "ultimate" load, or until lift of the structure occurs. After all of the piers are driven, the piers are connected in series with hydraulic lift cylinders and reloaded to either the design service load to stabilize the structure, or until the desired lift is achieved. The total reaction load is then distributed over the multiple pier locations. The final factor of safety against pier settlement at each pier location is calculated by dividing the drive load by the lock-off load.

As discussed in *Section 2.3.2.1*, additional skin friction develops over time as the soils heal around the pier shaft. The factor of safety generally increases with an increase in frictional capacity.

© 2024 Supportworks®
All Rights Reserved

2.8.2 Bolting the Under-Footing Bracket to the Foundation

Foundation Supportworks engineers neither require, nor recommend bolting of under-footing brackets to a concrete foundation with expansion or adhesive anchors. Experience has shown that bolting to unreinforced or under-reinforced concrete routinely causes concrete to crack and spall during installation of the expansion or adhesive anchors, or during the repeated loading and unloading procedure of driving piers. At best, bolting provides little benefit to the pier capacity and stability while introducing the potential to weaken the system by damaging the footing. Holes are included in the brackets to be used at the discretion of the installer or if a project engineer or building official requires that the piering system be positively attached to the structure.

Actually, the manner in which a push pier system is loaded and supported would tend to cause the bracket to push against the structure, not pull away from it. At the same time, however, while the bracket is pushing against the structure, it also tends to rotate toward the structure. If the pier system does not have adequate stiffness, then the tendency for excessive bracket rotation will be evidenced by the bearing plate being pried away from beneath the structure. This phenomenon does not mean that the overall pier system is translating away from the structure. Instead, it means the pier needs to be much stiffer. The stiffness of Foundation Supportworks' push pier systems greatly reduces this rotational tendency and precludes the need to positively attach the bracket to the structure. When such an attachment is made due to preference or local requirements, Foundation Supportworks engineers recommend the expansion or adhesive anchors be installed after completion of the piering operations. Anchors were not used when the pier systems were tested in accordance with AC406.

2.9 Under-Footing Push Pier Installation

The steps for under-footing push pier installation include footing preparation, bracket mounting/support, drive stand and drive cylinder attachment, pier tube driving, application of the final drive force, attachment of the lift cylinder assembly, structural lift (if applicable) and load transfer and lock off.

Safety precautions must be followed prior to and during excavation activities. Locate underground utilities prior to excavation and perform excavations at a distance away from utilities as mandated by the utility owner. Follow Occupational Safety and Health Administration (OSHA) guidelines for trench safety.

Step 1: Footing Preparation

Excavation is required in most cases to expose the concrete footing and prepare it for under-footing bracket placement. The footing may be accessed from either inside or outside the structure using isolated “pocket” or continuous excavations. For structures with basements, it may be advantageous to access the footing from within the basement of the structure by first removing sections of the basement floor slab. General steps for footing preparation include:

© 2024 Supportworks®
All Rights Reserved

1. For shallow pocket excavations, soil should be hand or machine-excavated from against the footing and foundation wall within an area approximately 3 feet square and to a depth approximately 9 to 13 inches below the bottom of footing. These excavations are made at each pier location. Alternatively, soil could be removed completely with a trench excavation. Trench excavations are more common when a lift is required.

2. The soil under the footing and foundation wall is removed to a distance that allows bracket placement (*Figure 2.18*).

Figure 2.18 Removing soil from beneath the footing with a chisel attachment

© 2024 Supportworks®
All Rights Reserved

3. Notch spread footings 16 to 22 inches wide (depending upon the width of the retrofit bracket) and approximately flush with the face of the foundation wall. Notching of footings may not be necessary depending upon the footing geometry, strength, steel reinforcement and the proposed piering plan. Notching of the footing reduces the eccentricity between the applied load and the pier section. The proposed pier plan may consider pier installation on opposing sides of the footing to provide balanced support of the loads. Installing piers on opposing sides of the footing in pairs or in a staggered configuration can be an acceptable alternative to notching. The design professional of record should approve the notching, particularly when notching will cut steel reinforcement. The outline of the notch is typically first made by drilling a series of closely spaced holes with a concrete drill bit. After the notch outline has been made, a chipping hammer or jack hammer can be used to impart energy to the perforated section, causing it to separate from the rest of the footing. Drilling the holes prior to using the chipping hammer or jack hammer also reduces the likelihood of concrete spalling from under the footing.

4. Smooth the concrete surfaces with a chipping hammer or other tool to produce similar results. The vertical and horizontal surfaces of the footing and foundation wall must be smooth and clean to allow full contact with the vertical and horizontal bearing plates of the under-footing bracket (*Figure 2.19* and *Figure 2.20*). Footing preparation should be completed to provide proper bracket/pier alignment (*Figure 2.21*).

Figure 2.19 Smoothing the vertical and horizontal bearing surfaces with a chipping hammer

Figure 2.20 Checking underside of footing for proper preparation

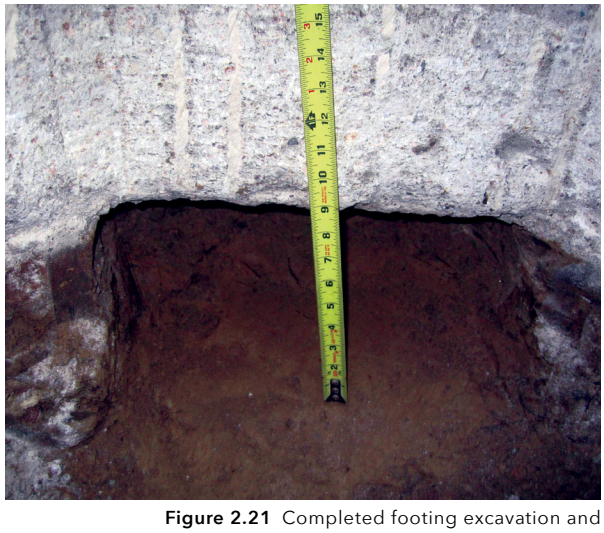

Figure 2.21 Completed footing excavation and preparation; ready to position bracket

© 2024 Supportworks®
All Rights Reserved

Step 2: Positioning the Bracket

The bracket is placed under the footing and raised into position with the horizontal and vertical bearing plates in full contact with the concrete surfaces. The bracket may be temporarily held in place using wood cribbing (*Figure 2.22*). Alternatively, a bracket RAYser™ is available from Foundation Supportworks for the more commonly used brackets. The bracket RAYser consists simply of a U-shaped plate with bottle jacks or scissor jacks to position the bracket and hold it snug against the concrete during the initial pier installation process (*Figure 2.23*).

Foundation Supportworks' under-footing brackets do not require mechanical anchorage to the concrete foundation. The published capacities are based on testing and analyses without anchors. There are bolt holes that may be used to mount the bracket to the concrete with expansion or adhesive anchors, if needed to meet the project specifications. It should be noted, however, that the use of anchors to mount the under-footing bracket may cause concrete spalling and cracking from the repeated loading and unloading process during pier installation and lock off. Additionally, drilling the anchor holes could compromise the integrity of steel reinforcement. If mounting of the under-footing bracket with anchors is required, Foundation Supportworks engineers recommend anchoring the bracket after the system has been locked off. See *Section 2.8.2* for more information regarding bolting of the bracket to the foundation.

Figure 2.22 Temporary bracket support with wood cribbing

Figure 2.23 Bracket RAYser support system

© 2024 Supportworks®
All Rights Reserved

Step 3: Mounting the Drive Stand & Hydraulic Drive Cylinder

1. Slide the external sleeve over the starter tube and insert the sleeve and starter tube together through the bracket (*Figure 2.24* and *Figure 2.25*). Care must be taken that the sleeve and starter tube are properly aligned and extend past both the top and bottom plates of the bracket. The sleeve and starter tube could also be placed after mounting the drive stand to the bracket. Installers may find it easier, however, to set the sleeve and starter tube without being restricted by the drive stand legs.

Figure 2.24 Exterior sleeve slid over the starter tube

Figure 2.25 Sleeve and starter inserted together through the bracket

© 2024 Supportworks®
All Rights Reserved

2. The drive stand is fitted to the bracket and secured with coil rod (PP237 system), L-pins (PP288 system) or quick release hitch pins (PP350 system). *Figure 2.26* and *Figure 2.27* show setting of the drive stand for the PP288 push pier system and securing it to the bracket with L-pins.

Figure 2.26 Drive stand for PP288 push pier system fitted to the bracket

Figure 2.27 PP288 drive stand secured to the bracket with L-pins

3. Slide the hydraulic drive cylinder into the top fixture of the drive stand and lock it in position with the coil rod and nuts (*Figure 2.28* and *Figure 2.29*).

Figure 2.28 Hydraulic drive cylinder placed within top fixture of drive stand

Figure 2.29 Drive cylinder locked in position with coil rod and nuts

© 2024 Supportworks®
All Rights Reserved

4. Connect the hydraulic hoses to the inlet and outlet of the drive cylinder and the inlet and outlet of the remote valve assembly (*Figure 2.30*).

Figure 2.30 Connect hydraulic hoses

5. Align the drive stand by activating the hydraulics and extending the drive cylinder rod to make slight contact with the starter tube. Use a digital level, protractor or other device to check alignment of the drive stand, sleeve, starter tube and bracket (*Figure 2.31*). Adjust the alignment as necessary for the bracket system being utilized; i.e., 2-degree, 3-degree, or vertical brackets. Proper footing preparation is critical for setting the bracket and system at the correct installation angle. Temporary cribbing may be used between the drive stand and the foundation wall to set the correct installation angle while advancing the starter tube and external sleeve (*Figure 2.32*).

Figure 2.31 Checking drive stand alignment with digital level

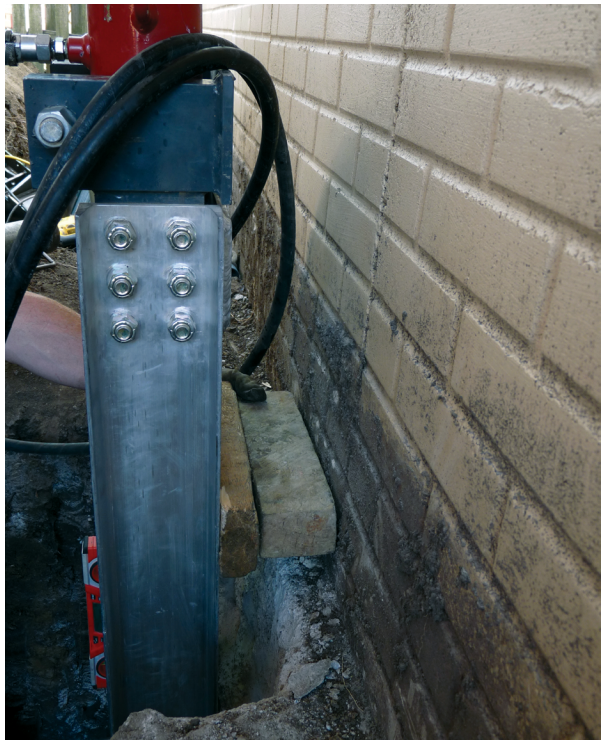

Figure 2.32 Temporary wood cribbing used to set installation angle

© 2024 Supportworks®
All Rights Reserved

Step 4: Pier Tube Installation

1. Drive the external sleeve and starter tube together until the welded collar or trumpeted end of the sleeve is seated at the top of the bracket. Pier tubes are then coupled (*Figure 2.10*) and pushed through the external sleeve (*Figure 2.33*). The standard length for pier tubes is 36 inches for all of the Foundation Supportworks side-load, under-footing, pier systems. Drive cylinders FS35DC and FS425DC have 22-inch strokes. The PP237 and PP288 crawl space pier tubes have lengths of 18 inches and are generally pushed with Foundation Supportworks drive cylinder FS35CSDC, which has a 13-inch stroke. Therefore, the drive process for the sleeve and starter tube, the standard 36-inch pier tubes, and the 18-inch crawl space pier tubes requires a two stage process with the use of a driving tool (drive tube). When the maximum cylinder stroke has been reached, the cylinder is retracted, the drive tube is set in place, and the push is completed to the top of the bracket or external sleeve (*Figure 2.34*).

Figure 2.33 Installing PP288 push pier tube

Figure 2.34 Driving tube tool set in place for second stage of push

© 2024 Supportworks®
All Rights Reserved

2. Record the drive pressure at final stroke of each pier tube section (*Figure 2.35*).

   Safety precautions must be followed when driving pier tube sections to ensure that body and clothing are away from pinch points. Take caution and avoid over-stroking the cylinder rod which may result in a rapid increase in pressure, possibly resulting in cylinder damage or personal injury.

3. Once the predetermined drive pressure is achieved or the structure starts to lift, the pressure is released from the hydraulic system and the drive stand and drive cylinder are removed from the bracket. The drive process is repeated at each of the proposed pier locations.

Figure 2.35 Pressure readings are recorded for each pier tube

Step 5: Assembling the Bracket & Mounting Lift Cylinders

1. The final pier tube extending up from the bracket will often have to be cut to the desired elevation. To accomplish this, the final pier tube is removed from within the external sleeve and placed in a chop saw to achieve a square cut (*Figure 2.36*). Alternatively, a tube cutting guide can be positioned over the in-place pier section and a cut can be made with a reciprocating saw or portable band saw. The last pier tube section is typically cut to a length to extend above the external sleeve approximately 4½ inches. The cutoff length may vary depending upon the amount of structural lift anticipated. The removed pier section is replaced after the cut is made.

Figure 2.36 Cutting pier tube to desired length with a chop saw

© 2024 Supportworks®
All Rights Reserved

2. The pier cap is set on the pier tube and two threaded rods or coil rods are fed through the holes of the pier cap and bracket. The pier cap is connected to the bracket with nuts on each end of the rods (*Figure 2.37*). There should be adequate thread left above the top nuts above the pier cap to allow coupling of the lift cylinder assembly to the rods (*Figure 2.38*).

Figure 2.37 Installation of pier cap plate with coil rods and nuts

Figure 2.38 PP288 bracket ready for lift cylinder assembly

3. Lift cylinder assembly rods are coupled to the bracket assembly rods as shown in *Figure 2.39*. Adjacent lift cylinders (on adjacent piers) are connected in series to provide uniform application of load (*Figure 2.40*).

Note: The hydraulic system shown in the figures is technically a "parallel" system. However, it is common to say that the piers are connected in "series," which simply means hydraulic lines run between adjacent pier locations and they are often all connected together with one setup.

Figure 2.39 Connection of lift cylinder assembly

Figure 2.40 Hydraulic system connected to provide uniform application of load

© 2024 Supportworks®
All Rights Reserved

Step 6: Structural Lift and/or Lock Off

1. Hydraulic pressure is applied to the system to either lift the structure to the proper elevation or provide the required lock-off pressure/load. The lock-off pressure/load is generally the service load or design working load per pier. It may be necessary to remove the soil from above the footing if pocket excavations were initially made. Removal of as much soil load as possible around the foundation will increase the potential to achieve a desired lift.

2. The system is first equalized by opening the valves at each cylinder in sequence and adjusting the system pressure. The system should be equalized to a pressure on the order of 1,000 psi.

3. Slowly raise the pump pressure to raise the foundation. Monitor the lift at each pier location and after achieving proper lift, close the valve to the top of the cylinder. If the piers are for stabilization only, close the valves as soon as noticeable movement occurs.

4. When the structure has been lifted to the proper elevation or the piers have been reloaded to the required lock-off load (typically the design working load), the load is locked off to the piers by tightening the two nuts down to the top of the pier cap.

5. The pressure is released from the hydraulic system and the lift cylinder assembly is removed from the bracket (*Figure 2.41*). The pier system installation is essentially complete. Permanent benchmarks may be established within and beyond the work area, if approved by the owner or client. These monitoring points would allow relative movements to be measured in the future, if necessary (*Figure 2.42*).

Figure 2.41 System locked off; pier installation complete

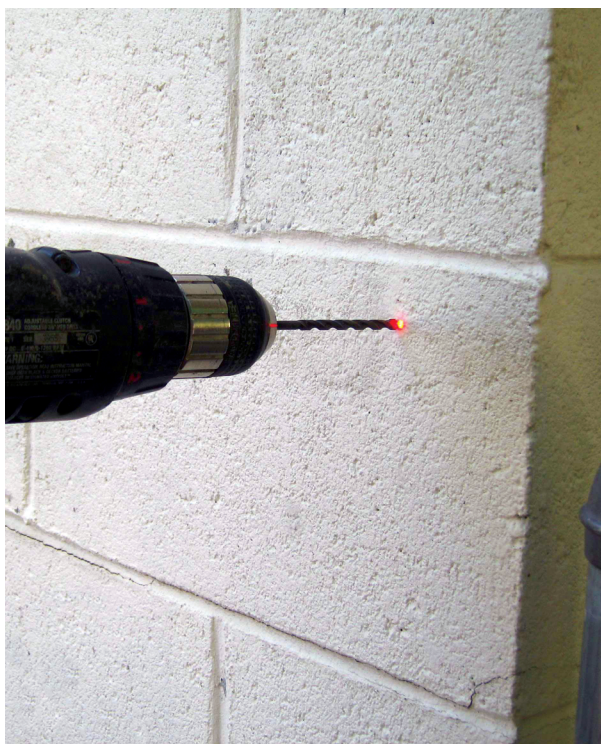

Figure 2.42 Benchmark established with a shallow hole drilled into the concrete block

© 2024 Supportworks®
All Rights Reserved

Step 7: Backfill & Clean Up Work Area

1. Backfill excavations and properly compact with a mechanical tamper (*Figure 2.43*). This may also be an ideal time to improve the drainage system around structures with below grade living areas or working space. New drain pipe can be installed along with free-draining granular backfill provided the drain pipe is connected to an interior sump system or drained by gravity to daylight discharge points. Interior pier installation may require concrete patching and finishing after soil compaction (*Figure 2.44*).

Figure 2.43 Backfill excavations and compact soil

Figure 2.44 Concrete placement at interior pier locations

© 2024 Supportworks®
All Rights Reserved

2.10 PP288 Flush-Mount Push Pier Installation

The PP288 flush-mount bracket system may be used for applications where poured concrete elements such as a foundation wall, column, pile cap, or grade beam have adequate strength, thickness, and vertical dimensions to allow proper attachment of the bracket. PP288 flush-mount system capacities are provided in *Appendix 2A* for systems using either expansion or adhesive anchors.

Step 1: Concrete Preparation

Excavation may be necessary to expose the vertical face of the concrete. If the bracket is mounted on a foundation wall or column above a spread footing, the concrete footing would have to be cored through or removed entirely to allow for advancement of the pier tube sections. The vertical face of the concrete to receive the bracket should be smooth of surface irregularities and free of structural cracks. If necessary, a thin layer of leveling compound may be used to create a smooth flat surface prior to mounting the bracket.

Safety precautions must be followed prior to and during excavation. Locate underground utilities prior to excavation activities and perform excavations at a distance away from utilities as mandated by the utility owner. Follow OSHA guidelines for trench safety during excavation and installation activities.

Step 2: Mounting the Bracket

The flush-mount bracket is secured to the concrete vertical face using eight (8) ¾-inch diameter anchors (*Figure 2.45*). Rather than attempting to position and hold the bracket in place, a template of the bracket bolt holes could be considered to mark the anchor locations.

Figure 2.45 Flush-mount bracket installation

Steps 3 - 7

The remaining steps for flush-mount push pier installation are similar to those for the under-footing system described in *Section 2.9*.

© 2024 Supportworks®
All Rights Reserved

2.11 Concentric Push Pier Installation

The concentric push pier system is used to stabilize and lift settled foundations. Unlike the typical "side-load" retrofit brackets, these systems are installed directly beneath foundation walls or point loads and, therefore, are not exposed to bending forces generated from off-set, eccentric loading conditions (*Figure 2.46*). Concentric piers are commonly used in confined spaces such as crawl spaces or tunnels, on pier-and-beam foundations, on post-tensioned slab interior grade beams, and under shallow exterior wall footings with limited soil cover.

Figure 2.46 Concentric pier installation

Step 1: Excavation

1. Excavate a 3-foot square hole to an approximate depth of 40 inches below the bottom of footing.

2. Excavate the soil from beneath the footing back an adequate horizontal distance so that the drive stand assembly can be located directly below the center of the foundation wall.

3. Remove all soil that may be adhered to the bottom of the footing.

4. Bottom of excavation and footing should be flat. Use chipping hammer as necessary (*Figure 2.47*).

Figure 2.47 Prepare bottom of footing with chipping hammer, as necessary, to create a flat and level surface

© 2024 Supportworks®
All Rights Reserved

Step 2: Drive Stand & Hydraulic Drive Cylinder Placement

1. Place collapsed drive stand under the footing and center below the foundation wall above.
2. Level and plumb the drive stand.
3. Remove hitch pins from the telescoping legs.
4. Raise the top of the drive stand to as close to the bottom of footing as possible.
5. Insert hitch pins into the upper holes on the drive stand legs. If installing a grout plate, place plate with grout on top of drive stand (*Figure 2.48*).
6. Place a starter tube section on top of the floating middle plate.
7. Raise the floating middle plate until the top plate on the drive stand is approximately two inches below the bottom of the footing *(Figure 2.49)*.
8. Tighten the coil nuts on both sides of the drive stand.
9. Remove starter tube from the middle plate.
10. Place hydraulic drive cylinder on the middle plate *(Figure 2.50)*.
11. Place starter section and small drive tube through the hole in the drive stand bottom plate.
12. Connect hydraulic pump to the cylinder.
13. Slowly extend cylinder until the top of the drive stand engages the bottom of footing *(Figure 2.51)*.
14. Tighten the coil nuts on both sides of the drive stand.

Figure 2.48 Grout plate used to create uniform bearing

Figure 2.49 Drive stand setup within excavation

Figure 2.50 Placement of hydraulic drive cylinder

Figure 2.51 Extend hydraulic cylinder to engage footing

© 2024 Supportworks®
All Rights Reserved

Step 3: Pier Tube Installation

1. Make sure starter section is plumb and adjust drive stand as necessary *(Figure 2.52)*.
2. Fully extend cylinder.
3. Fully retract cylinder.
4. Remove small drive tube.
5. Place medium drive tube onto starter tube.
6. Fully extend cylinder.
7. Fully retract cylinder.
8. Remove medium drive tube.
9. Place large drive tube onto starter tube.
10. Fully extend cylinder.
11. Record final drive pressure for that section.
12. Fully retract cylinder.
13. Remove large drive tube.
14. Place an 18-inch long push pier tube into the starter section.
15. Repeat procedure for rest of the tube sections. Pier advancement is terminated when the target drive pressure is achieved, or the structure starts to mobilize.
16. Occasionally check that the coil nuts are tight and that the drive stand and pier sections are plumb.

Figure 2.52 Check alignment of drive stand and starter section

Step 4: Drive Stand & Hydraulic Drive Cylinder Removal

1. Extend cylinder and loosen coil nuts several inches.
2. Fully retract cylinder and remove from drive stand.
3. Remove hitch pins and lower drive stand to the collapsed position.
4. Place hitch pins into the lower holes on the drive stand legs.
5. Remove drive stand assembly from excavation.

© 2024 Supportworks®
All Rights Reserved

Step 5: Pier Bracket & Hydraulic Lift Cylinder Placement

1. Measure the distance from the bottom of the footing to the top of the last pier tube *(Figure 2.53)*.
2. Subtract 15 inches from the measured dimension and cut a 36-inch long pier tube to this lenght.
3. Connect the pier cap to the bracket with coil rods and nuts.
4. Insert the cut pier tube through the bottom plate of the bracket and up against the pier cap.
5. Secure the pier tube to the bracket with the Concentric Pier Vice Grip *(Figure 2.54)*.
6. Place bracket assembly onto the last driven pier tube *(Figure 2.55)*.
7. Remove the vice grip.
8. Lift bracket to the bottom of the footing.
9. Tighten the coil nuts.
10. Place hydraulic cylinder on top of the pier cap.
11. Slowly extend the cylinder until the top of the bracket is snug against the bottom of footing *(Figure 2.56)*.
12. Make sure the bracket is plumb and adjust as necessary.
13. Tighten coil rod nuts.

Figure 2.53 Measure from bottom of footing to top of installed pier section

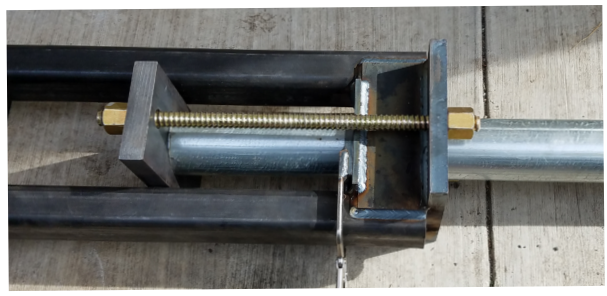

Figure 2.54 Assemble bracket and pier section outside of excavation

Figure 2.55 Place bracket assembly onto last driven pier tube

Figure 2.56 Place hydraulic cylinder and snug bracket against footing

© 2024 Supportworks®
All Rights Reserved

Step 6: Structural Lift and/or Lock Off

Refer to *Section 2.9*, Step 6, for final procedures.

Figure 2.57 Completed concentric pier installation

Step 7: Backfill & Clean Up

Completely backfill all excavations and properly compact soil with a mechanical tamper.

2.11.1 Concentric Piers with SmartJacks

Concentric piers can also be used as supplemental support beneath main girders in crawlspaces in order to provide a deep foundation for the SmartJack system (See Chapter 4). The concentric piers will transfer the load from the girders through weak upper soils and into competent load bearing strata below *(Figure 2.58)*. Refer to the technical specifications within *Appendix 2* (for concentric piers) and *Appendix 4* (for SmartJacks) for component and system capacities.

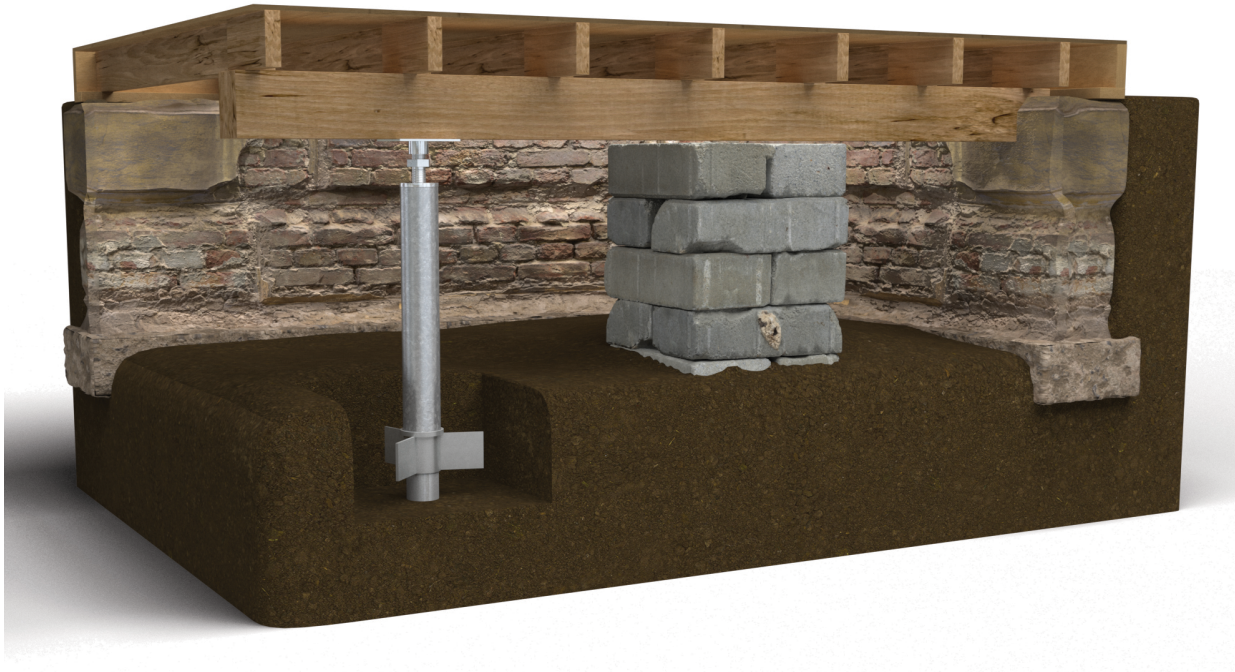

Figure 2.58 Graphic of concentric pier/SmartJack installation. Backfill around base of SmartJack not shown for clarity. Backfill is required.

© 2024 Supportworks®
All Rights Reserved

Step 1: Excavation

1. Excavate an approximate 2-foot square hole to a distance of 40 inches below the bottom of the girder.

2. Bottom of excavation should be flat and level.

Step 2: Pier Installation

See Steps 2, 3, and 4 within the Concentric Push Pier Installation *(Figure 2.59)*. The top of the last installed pier tube should be below the ground surface elevation, i.e., below the top of the excavation. Cut tube as necessary.

Figure 2.59 Concentric pier drive stand beneath main girder in crawl space

Step 3: SmartJack Base Plate

1. Place the SmartJack/Concentric Pier Base Plate onto the last installed pier tube *(Figure 2.60)*.

Figure 2.60

2. Backfill and compact thoroughly to the top of the base plate *(Figure 2.61)*. If the existing soil is excessively wet or dry, or consists of a material type that cannot be reasonably compacted, consideration should be given to bringing in adequate backfill soil, mixing the existing soil with a cement bag mix to improve strength, or backfilling the excavation with concrete.

Figure 2.61

3. Complete Steps 3 through 5 from *Section 4.2*.

Step 4: Backfill & Cleanup

Backfill and compact soil to fil the remainder of the excavation. Level out extra spoils, replace concrete, or install a crawl space liner as required.

Figure 2.62 Completed concentric pier/SmartJack installation. Model 288 SmartJack shown.

© 2024 Supportworks®
All Rights Reserved

2.12 PP288 Slab Push Pier Installation

The PP288 slab pier system is used to stabilize and/or lift settled concrete floor slabs. Monometer survey equipment, a laser level, a zip level, or other suitable equipment should be used to identify low areas in the slab. Slab piers should be located at these identified low points. Slab piers should also be considered in areas of significant floor cracking, either centered on the crack or located on alternating sides of the crack to ensure an even lift. Voids beneath a stabilized and lifted slab should be filled with suitable material such as a cementitious grout mixture or PolyLevel® polyurethane foam.

Step 1: Slab Preparation

1. Mark the slab pier locations with consideration given to possible underground utilities, overhead obstructions, maximum pier spacing, existing floor cracks and lift requirements. Small paper plates may be used to mark preliminary slab pier locations since the plates can be easily moved around the slab (*Figure 2.63*).

   Slab pier spacing can be estimated using *Figure 2.64*, which gives a recommended grid pattern spacing for various slab thickness and live load combinations. The guide is based on unreinforced concrete slabs having a minimum concrete strength of 2,500 psi.

Figure 2.63 Marking slab pier locations

		Live Load				
		30 psf	40 psf	50 psf	60 psf	80 psf
Slab Thickness	3.5"	5'-0"	4'-6" (Typical for Residential)	4'-3"	4'-0"	3'-9"
	4.0"	5'-6"	5'-0" (Typical for Residential)	4'-9"	4'-6"	4'-3"
	4.5"	6'-0"	5'-6" (Typical for Residential)	5'-3"	5'-0"	4'-6"
	5.0"	6'-6"	6'-0"	5'-9"	5'-6"	5'-0"
	6.0"	7'-3"	7'-0"	6'-6"	6'-3"	5'-9"
	8.0"	8'-9"	8'-6"	8'-3"	7'-9"	7'-3"

Figure 2.64 Slab Pier Spacing Guide

© 2024 Supportworks®
All Rights Reserved

2. Core 8-inch diameter holes in the concrete slab (*Figure 2.65*). Adjust slab pier locations and spacings based on the actual concrete thickness determined at the first cored hole. Remove the concrete cores and use a hand probe to check for underground obstructions (*Figure 2.66*). Using a small hand tool, excavate all material beneath the slab to at least 4 inches below the bottom of the slab and extending at least 3 inches beyond the edges of the cored hole (*Figure 2.67*). Check with your hand to confirm that the bottom of slab is relatively smooth and free of subgrade material.

Safety precautions must be followed during concrete coring to ensure the core drill is securely mounted to the floor slab and proper safety equipment including eye and ear protection is worn during coring operations. Immediately remove any water from the floor when coring to reduce potential for electrical shock. Keep body parts, clothing and other objects away from core bit during operation.

Figure 2.65 Concrete coring

Figure 2.66 Probing for utilities or obstructions

Figure 2.67 Excavating beneath the slab

© 2024 Supportworks®
All Rights Reserved

Step 2: Assembling the Bracket Below the Slab

1. The PP288 slab pier bracket assembly consists of one (1) main plate, two (2) wing plates, two (2) 14-inch long ⅝-inch diameter threaded rods, four (4) ⅝-inch hex nuts, and one (1) pier cap. Set the main plate (first) and the wing plates (second) through the cored hole. Cover the welded nuts on the bottom of the main plate with duct tape prior to placement through the cored hole to ensure clean threads for later insertion of the threaded rods. Locate the wing plates above the main plate so that the wing plate holes line up with the holes in the main plate (*Figure 2.68*). Align the straight edges of the two wing plates to be essentially parallel with each other.

2. Install hex nuts on one end of the threaded rods leaving about 2½ inches of thread below the nuts. Insert the threaded rods through the wing plate holes and thread them into the weld nuts below the main plate. Turn the rods by hand until the nuts on the threaded rods are seated against the top surface of the wing plates. Continue to tighten the nuts with a deep well socket to fasten the wing plates firmly to the main plate (*Figure 2.69*).

Figure 2.68 Main plate and wing plates positioned and aligned beneath the slab

Figure 2.69 Threaded rods installed

© 2024 Supportworks®
All Rights Reserved

Step 3: Mounting the Drive Stand & Drive Cylinder

1. Cut the coupler extension off a standard 36-inch long pier tube to use as your starter tube (*Figure 2.70*). Insert the "coupler" end of the starter tube through the hole of the main plate.

2. Place the slab pier drive adaptor over the pier tube and allow the ⅝-inch threaded rods from the bracket to extend through the holes within the drive adaptor (*Figure 2.71*). The pier tube assists with alignment of the bracket main plate with the slab pier drive adaptor. Alternatively, the pier tube could also be placed through the bracket after positioning of the drive adaptor, but before the threaded rods are tightened.

Figure 2.70 Starter tube made by cutting coupler end of standard pier tube

Figure 2.71 Slab pier drive adaptor installed

3. Pull up on the threaded rods while tightening the hex nuts to bring the bracket wing plates snug against the bottom of the slab. Slide the PP288 drive stand onto the slab pier drive adaptor and secure with L-pins (*Figure 2.72*). Set the hydraulic drive cylinder into the top fixture of the drive stand and lock it in position with the coil rod and nuts (*Figure 2.73*). Connect the hydraulic hoses.

Figure 2.72 PP288 drive stand mounted to slab pier drive adaptor

Figure 2.73 Drive cylinder set into top fixture of drive stand

© 2024 Supportworks®
All Rights Reserved

Step 4: Pier Tube Installation

1. Electric pumps are preferred for slab pier installations since the application of drive force is more easily controlled and the risk of overstressing the concrete slab during pier driving is reduced.

2. Pier tubes are driven using similar procedures as outlined in *Section 2.9* (Step 4), including recording of drive pressures at the end of each driven tube section. The drive stand should self-align when force is applied by the drive cylinder to the pier tubes; therefore, no cribbing or alignment of the drive stand should be necessary if the floor slab was prepared properly.

   Safety precautions must be followed when driving pier tube sections to ensure that body and clothing are away from pinch points. Take caution and avoid over-stroking the cylinder rod which may result in a rapid increase in pressure, possibly resulting in cylinder damage or personal injury.

3. Drive pier tubes until the required termination drive force is achieved or slab movement (flexing) in excess of about ¼ inch occurs. Care should be taken by the installer to slowly release hydraulic pressure at the end of each cylinder stroke. Once the predetermined termination drive force is achieved or the slab starts to lift, the pressure is released from the hydraulic system and the drive stand and drive cylinder are removed from the slab pier drive adaptor. The drive adaptor is then disconnected from the threaded rods of the slab pier bracket.

© 2024 Supportworks®
All Rights Reserved

Step 5: Mounting the Lift Cylinder

1. The last pier tube section is pulled from the hole, cut to desired length in a chop saw and replaced. The desired top-of-pier elevation relative to the top of the slab depends upon the slab thickness and the maximum amount of lift anticipated. If the slab will be stabilized without lifting, the top of pier tube can be approximately two inches below the top of the floor slab. It is imperative that the pier tube is cut correctly to ensure that the pier cap, threaded rod, and nuts are below the top of the slab after lift and/or lock-off operations.

2. Place the pier cap over the threaded rods and lightly tighten it against the top of the pier tube with two ⅝-inch hex nuts (*Figure 2.74* and *Figure 2.75*). Set the lift cylinder assembly onto the pier cap (*Figure 2.76*). Couple the threaded rods of the lift cylinder plate assembly to the threaded rods of the slab bracket to hold the lift cylinder in place (*Figure 2.77*).

   Note: The ¾-inch threaded rods of the standard Model 288 lift cylinder assembly are larger than the ⅝-inch rods of the slab pier bracket and are not used in this application.

Figure 2.74 Pier tube cut to length; pier cap placed

Figure 2.76 Lift cylinder assembly set on pier cap

Figure 2.75 Lightly tighten pier cap down onto pier tube

Figure 2.77 Lift plate assembly coupled to threaded rods of slab pier bracket

© 2024 Supportworks®
All Rights Reserved

Step 6: Slab Lift and/or Lock off

1. Connect hydraulic hoses to the top and bottom fittings on the lift cylinders (*Figure 2.78*). The lift cylinders are all hydraulically connected as a system (*Figure 2.79*) in order to provide simultaneous lift pressure at each cylinder. The system is first equalized by opening the valves at each cylinder in sequence and adjusting the system pressure. The system should be equalized to pressures on the order of 100 to 300 psi.

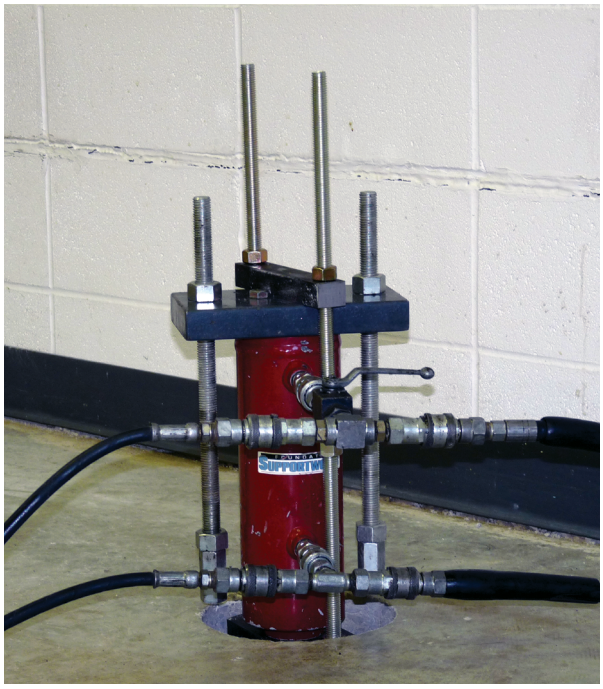

Figure 2.78 Hydraulic connections at lift cylinder

Figure 2.79 Lift cylinders connected for simultaneous loading

2. Slowly raise the pump pressure to raise the slab. Monitor the slab for lift at each pier location. After achieving the desired lift, close the valve to the top of the cylinder. If the piers are for stabilization only, close the valves as soon as noticeable slab movement occurs. Once all the cylinder valves are closed, the piers are locked off by tightening the ⅝-inch hex nuts to the tops of the pier caps (*Figure 2.80*).

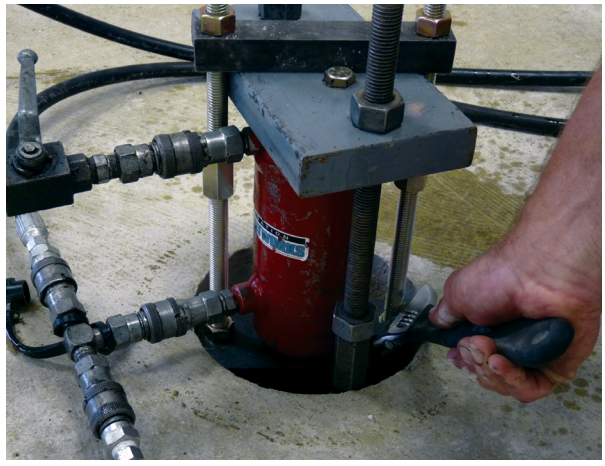

Figure 2.80 Pier load locked off by tightening nuts on top of pier cap

3. The system pressure is released and the lift cylinder assemblies are removed. Cut the threaded rods flush with the tops of the hex nuts with a grinder or saw (*Figure 2.81*). The tops of the nuts must be below the surface elevation of the slab.

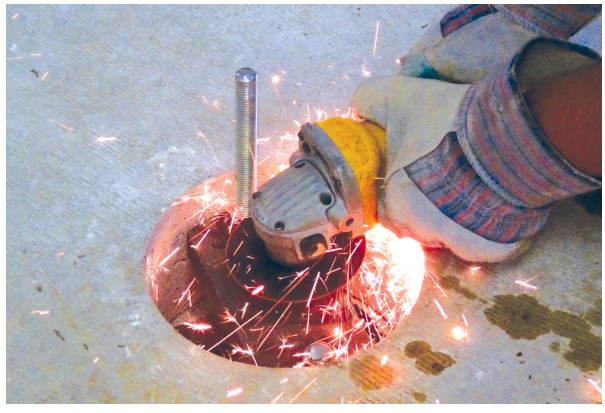

Figure 2.81 Cutting the threaded rods

© 2024 Supportworks®
All Rights Reserved

Step 7: Void Fill & Finish Surface

Place concrete and trowel finish at each pier location (*Figure 2.82* and *Figure 2.83*). Voids under the slab should be filled completely with a suitable grout mixture or PolyLevel® polyurethane foam. Void filling is typically completed before patching the core holes with concrete, but can be done either before or after the concrete is placed. Concrete patches should be allowed to cure before void filling.

Figure 2.82 Patching holes at pier locations

Figure 2.83 Finishing concrete

2.13 Push Pier Load Testing

The push pier installation process is essentially equivalent to performing a proof load test at each push pier location; therefore, "official" load testing of push pier systems is not commonly required. The piers are advanced to a final drive pressure or ultimate load, then reloaded to the specified lock-off load (typically at or near the service load) or until the desired lift is achieved. The drive and lock-off loads are easily calculated from the effective area of the hydraulic cylinder and the pressure gauge reading at the hydraulic pump. Pier head movements are not typically monitored during the proof loading process of a typical push pier installation.

The deflection-to-load response of the push pier system can be determined by field load testing using calibrated equipment either directly at the production pier location or with sacrificial piers installed away from the structure. The loading methodology in ASTM D1143 may be used to verify pier deformation (elastic compression and settlement) and creep effects. The preferred method is to perform the load test at the production pier location with the bracket attached to the structure. If a sacrificial test pier is used away from the structure, a compression load test frame must be constructed.

© 2024 Supportworks®
All Rights Reserved

CHAPTER 2

APPENDIX 2A

Bracket Specifications & Capacities

FS238B Bracket Specifications & Capacities when used with the PP237 Push Pier System

Bracket:
Weldment manufactured from ¼" and ⅜" ASTM A36 plate

Pier Tube:
Ø2.375" x 0.154" wall x 36" long
ASTM A500 Grade B or C
Yield strength = 60 ksi (min)
Tensile strength = 70 ksi (min)
Available plain or hot-dip galvanized(2)

Pier Tube Coupler:
Ø2.000" x 0.187" wall x 5" long
ASTM A500 Grade C
Yield strength = 46 ksi (min)
Tensile strength = 62 ksi (min)

Pier Starter Tube:
Pier tube section with Ø2.875" friction reduction collar welded at leading end

External Sleeve:
Ø2.875" x 0.203" wall x 30" or 48" long with welded collar at one end
ASTM A500 Grade B or C
Yield strength = 60 ksi (min)
Tensile strength = 70 ksi (min)

Cap Plate:
¾" x 3.75" x 5.75" ASTM A572 Grade 50 with confining ring on one side

Bracket Hardware(3):
(2) - Ø⅝" x 16" long coil rod AISI 1045
Tensile strength = 120 ksi (min)
Electrozinc plated per ASTM B633

Bracket Finish:
Available plain or hot-dip galvanized(2)

Allowable Bracket Capacity(4,5,6,7) R_n/Ω		
	with 30" Sleeve (kips)	**with 48" Sleeve (kips)**
Plain	13.0	17.0
Plain Corroded(1)	9.9	12.9
Galvanized Corroded(1)	12.1	15.9
Maximum Drive Force During Installation(7)	**22.1**	**28.9**

(1) Corroded capacities include a 50-year scheduled sacrificial loss in thickness per ICC-ES AC406.

(2) Hot-dip galvanized coating in accordance with ASTM A123.

(3) Optional hardware utilizes similar sized all-thread made from Grade B7, tensile strength = 125 ksi.

(4) Brackets shall be used for support of structures that are considered to be fixed from translation. Structures that are not fixed from translation shall be braced in some manner prior to installing retrofit bracket systems.

(5) Allowable compression capacities consider continuous lateral soil confinement in soils with SPT N-value ≥ 4. Piers with exposed unbraced lengths or piers placed in weaker or fluid soils should be evaluated on a case-by-case basis by the project engineer.

(6) Concrete bearing assumes a minimum compressive strength (f'_c) of 2,500 psi. Local concrete bending and other local design checks should be evaluated on a case-by-case basis by the project engineer.

(7) Push Piers shall be installed with a driving force exceeding the required allowable service load by a sufficient factor of safety (FOS). FOS is most commonly between 1.5 and 2.0, although a higher or lower FOS may be considered at the discretion of the pier designer or as dictated by local code or project requirements.

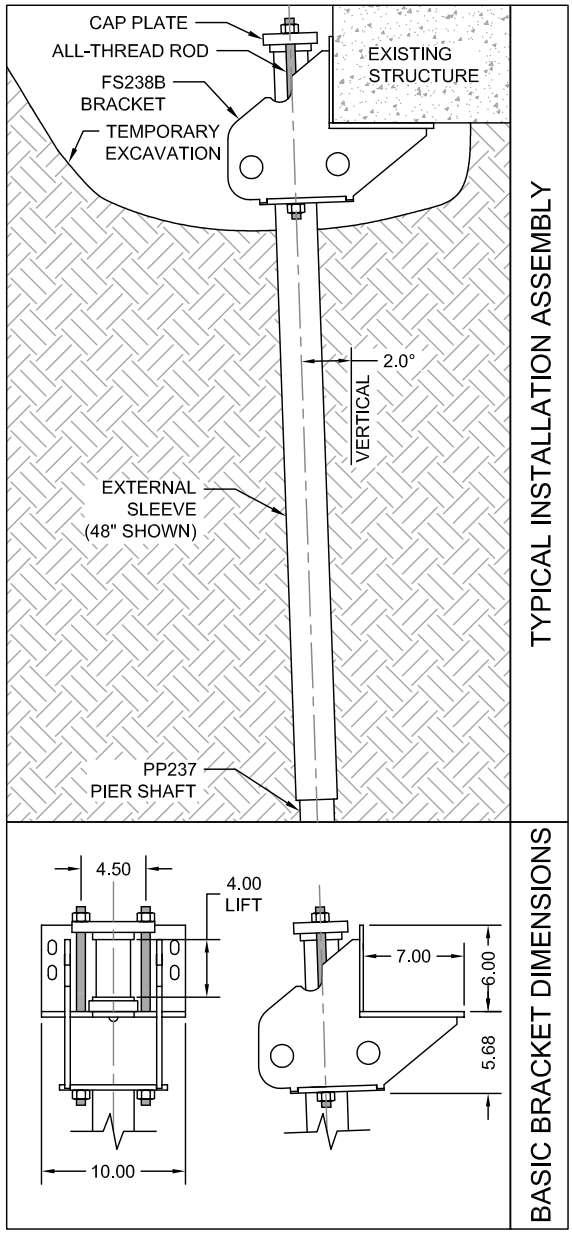

© 2024 Supportworks®
All Rights Reserved

FS288BL2 Bracket Specifications & Capacities when used with the PP288 Push Pier System

Bracket:
Weldment manufactured from ¼", 5⁄16", and ⅜" ASTM A572 Grade 50 plate

Pier Tube:
Ø2.875" x 0.165" wall x 36" long
Triple-coated in-line galvanized
ASTM A500 Grade C
Yield strength = 50 ksi (min)
Tensile strength = 55 ksi (min)

Pier Tube Coupler:
Ø2.500" x 0.125" wall x 6" long
ASTM A500 Grade B
Yield strength = 50 ksi (min)
Tensile strength = 58 ksi (min)

Pier Starter Tube:
Pier tube section with machined Ø3.375" friction reduction collar pressed around leading end

External Sleeve:
Ø3.500" x 0.216" wall x 30" or 48" long with trumpet flare at one end
ASTM A500 Grade B or C
Yield strength = 50 ksi (min)
Tensile strength = 62 ksi (min)

Cap Plate:
1" x 4.00" x 8.25" ASTM A572 Grade 65

Bracket Hardware[3]:
(2) - Ø¾" x 16" long all-thread rod Grade B7
Tensile strength = 125 ksi (min)
Electrozinc plated per ASTM B633

Bracket Finish:
Available plain or hot-dip galvanized[2]

Allowable Bracket Capacity[4,5,6,7] R_n/Ω		
	with 30" Sleeve (kips)	**with 48" Sleeve (kips)**
Plain	20.3	31.2
Plain Corroded[1]	15.7	24.1
Grout Filled Corroded[1]	17.7	27.3
Maximum Drive Force During Installation[7]	**48.1**	**60.0**

(1) Corroded capacities include a 50-year scheduled sacrificial loss in thickness per ICC-ES AC406. Grout filled piers consider a loss in thickness at the outside diameter only.

(2) Hot-dip galvanized coating in accordance with ASTM A123.

(3) Optional hardware utilizes similar sized contour (coil) thread made from AISI 1045, tensile strength = 120 ksi. Slightly lower tensile strength material does not govern the listed capacities.

(4) Brackets shall be used for support of structures that are considered to be fixed from translation. Structures that are not fixed from translation shall be braced in some manner prior to installing retrofit bracket systems.

(5) Allowable compression capacities consider continuous lateral soil confinement in soils with SPT N-values ≥ 4. Piers with exposed unbraced lengths or piers placed in weaker or fluid soils should be evaluated on a case-by-case basis by the project engineer.

(6) Concrete bearing assumes a minimum compressive strength (f'_c) of 2,500 psi. Local concrete bending and other local design checks should be evaluated on a case-by-case basis by the project engineer.

(7) Push Piers shall be installed with a driving force exceeding the required allowable service load by a sufficient factor of safety (FOS). FOS is most commonly between 1.5 and 2.0, although a higher or lower FOS may be considered at the discretion of the pier designer or as dictated by local code or project requirements.

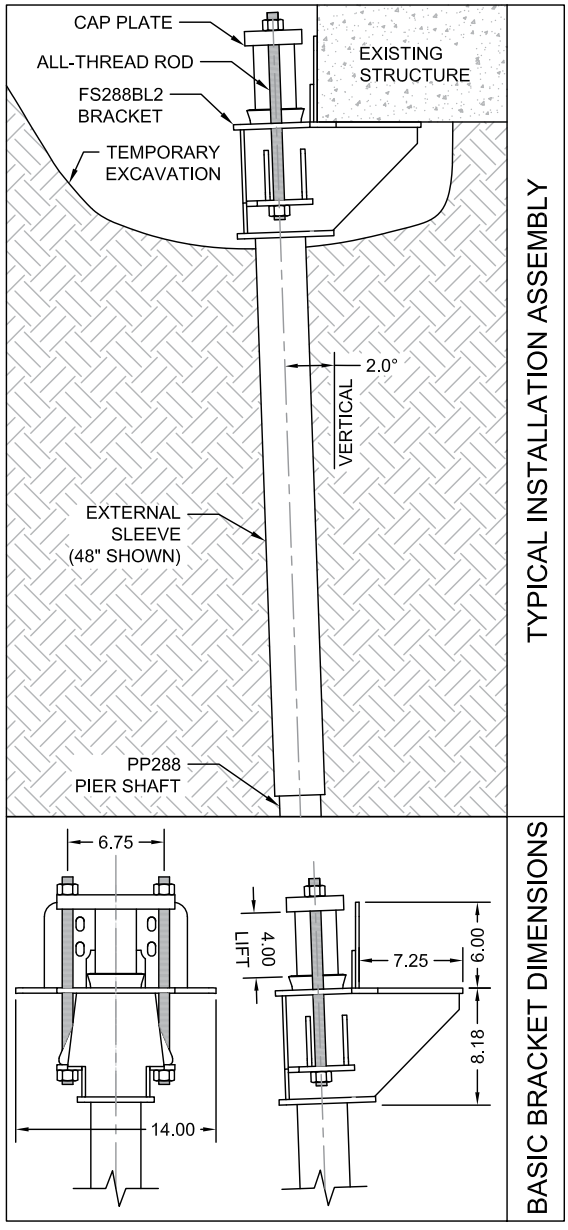

© 2024 Supportworks®
All Rights Reserved

FS288BL2V Bracket Specifications & Capacities when used with the PP288 Push Pier System

Bracket:
Weldment manufactured from ¼", 5⁄16", and ⅜" ASTM A572 Grade 50 plate

Pier Tube:
Ø2.875" x 0.165" wall x 36" long
Triple-coated in-line galvanized
ASTM A500 Grade C
Yield strength = 50 ksi (min)
Tensile strength = 55 ksi (min)

Pier Tube Coupler:
Ø2.500" x 0.125" wall x 6" long
ASTM A500 Grade B
Yield strength = 50 ksi (min)
Tensile strength = 58 ksi (min)

Pier Starter Tube:
Pier tube section with machined Ø3.375" friction reduction collar pressed around leading end

External Sleeve:
Ø3.500" x 0.216" wall x 30" or 48" long with trumpet flare at one end
ASTM A500 Grade B or C
Yield strength = 50 ksi (min)
Tensile strength = 62 ksi (min)

Cap Plate:
1" x 4.00" x 8.25" ASTM A572 Grade 65

Bracket Hardware[3]:
(2) - Ø¾" x 16" long all-thread rod Grade B7
Tensile strength = 125 ksi (min)
Electrozinc plated per ASTM B633

Bracket Finish:
Available plain or hot-dip galvanized[2]

Allowable Bracket Capacity[4,5,6,7] R_n/Ω		
	with 30" Sleeve (kips)	**with 48" Sleeve (kips)**
Plain	20.3	31.2
Plain Corroded[1]	15.7	24.1
Grout Filled Corroded[1]	17.7	27.3
Maximum Drive Force During Installation[7]	**48.1**	**60.0**

(1) Corroded capacities include a 50-year scheduled sacrificial loss in thickness per ICC-ES AC406. Grout filled piers consider a loss in thickness at the outside diameter only.

(2) Hot-dip galvanized coating in accordance with ASTM A123.

(3) Optional hardware utilizes similar sized contour (coil) thread made from AISI 1045, tensile strength = 120 ksi. Slightly lower tensile strength material does not govern the listed capacities.

(4) Brackets shall be used for support of structures that are considered to be fixed from translation. Structures that are not fixed from translation shall be braced in some manner prior to installing retrofit bracket systems.

(5) Allowable compression capacities consider continuous lateral soil confinement in soils with SPT N-values ≥ 4. Piers with exposed unbraced lengths or piers placed in weaker or fluid soils should be evaluated on a case-by-case basis by the project engineer.

(6) Concrete bearing assumes a minimum compressive strength (f'_c) of 2,500 psi. Local concrete bending and other local design checks should be evaluated on a case-by-case basis by the project engineer.

(7) Push Piers shall be installed with a driving force exceeding the required allowable service load by a sufficient factor of safety (FOS). FOS is most commonly between 1.5 and 2.0, although a higher or lower FOS may be considered at the discretion of the pier designer or as dictated by local code or project requirements.

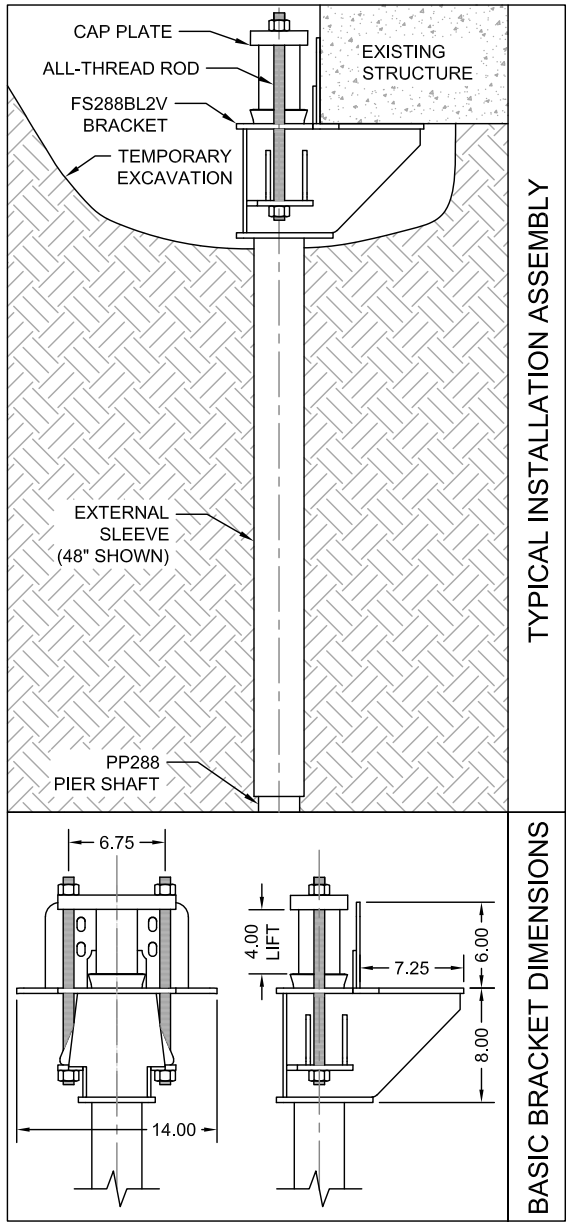

© 2024 Supportworks®
All Rights Reserved

FS288BFM Bracket Specifications & Capacities when used with the PP288 Push Pier System

Bracket:
Weldment manufactured from ¼", ⅜", and ½" ASTM A36 plate

Pier Tube:
Ø2.875" x 0.165" wall x 36" long
Triple-coated in-line galvanized
ASTM A500 Grade C
Yield strength = 50 ksi (min)
Tensile strength = 55 ksi (min)

Pier Tube Coupler:
Ø2.500" x 0.125" wall x 6" long
ASTM A500 Grade B
Yield strength = 50 ksi (min)
Tensile strength = 58 ksi (min)

External Sleeve:
Ø3.500" x 0.216" wall x 30" or 48" long with trumpet flare at one end
ASTM A500 Grade B or C
Yield strength = 50 ksi (min)
Tensile strength = 62 ksi (min)

Cap Plate:
1" x 4.00" x 8.25" ASTM A572 Grade 65

Bracket Hardware[3]:
(2) - Ø¾" x 16" long all-thread rod Grade B7
Tensile strength = 125 ksi (min)
Electrozinc plated per ASTM B633

Bracket Finish:
Available plain or hot-dip galvanized[2]

Concrete Anchorage[7] (Option 1):
(8) - Ø¾" x 7" Simpson Wedge-All
Mechanically galvanized per ASTM B695

Concrete Anchorage[8] (Option 2):
Adhesive = Simpson AT-XP
Quantity = approximately 1.25 oz per hole
(8) - Ø¾" x 7" long all-thread rod Grade B7
Tensile strength = 125 ksi (min)
Electrozinc plated per ASTM B633

Pier Starter Tube:
Pier tube section with Ø3.375" friction reduction collar pressed around leading end

Allowable Bracket Capacity[4,5,6,9] R_n/Ω		
	with Wedge Anchors[7] (kips)	**with Adhesive Anchors[8] (kips)**
Plain	22.0	31.0
Plain Corroded[1]	17.0	24.0
Grout Filled Corroded[1]	19.3	27.1
Maximum Drive Force During Installation[9]	**44.2**	**60.0**

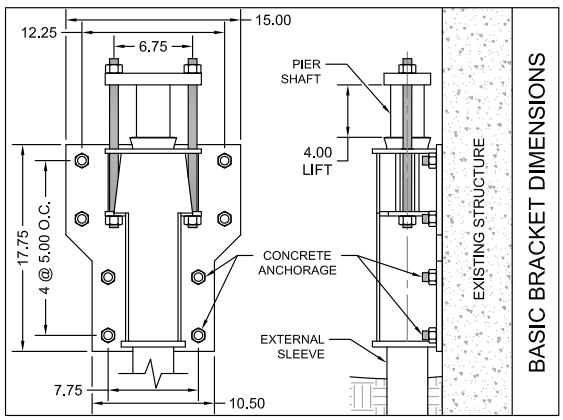

(1) Corroded capacities include a 50-year scheduled sacrificial loss in thickness per ICC-ES AC406. Grout filled piers consider a loss in thickness at the outside diameter only.

(2) Hot-dip galvanized coating in accordance with ASTM A123.

(3) Optional hardware utilizes similar sized contour (coil) thread made from AISI 1045, tensile strength = 120 ksi. Slightly lower tensile strength material does not govern the listed capacities.

(4) Brackets shall be used for support of structures that are considered to be fixed from translation. Structures that are not fixed from translation shall be braced in some manner prior to installing retrofit bracket systems.

(5) Allowable compression capacities consider continuous lateral soil confinement in soils with SPT N-values ≥ 4. Piers with exposed unbraced lengths or piers placed in weaker or fluid soils should be evaluated on a case-by-case basis by the project engineer.

(6) Bracket is strictly intended to be mounted to poured concrete structures. Bracket should never be mounted to CMU concrete block. Anchorage assumes a minimum concrete compressive strength (f'_c) of 2,500 psi and a minimum concrete thickness of 8". Local concrete bending and other local design checks should be evaluated on a case-by-case basis by the project engineer.

(7) When the bracket is mounted with wedge anchors, the bracket shall be located with a minimum distance of 6" from the edge of the bracket to any concrete edge. Wedge anchors require the use of a Ø¾" drill bit and a minimum embedment depth of 5". Wedge anchors shall be installed to a torque of 150 ft-lb.

(8) When the bracket is mounted with adhesive anchors, the bracket shall be located with a minimum distance of 9" from the edge of the bracket to any concrete edge. Adhesive anchors require the use of a Ø¹³⁄₁₆" drill bit and a minimum embedment depth of 5.50". Adhesive anchors shall be tightened to a snug tight condition after sufficient curing time.

(9) Push Piers shall be installed with a driving force exceeding the required allowable service load by a sufficient factor of safety (FOS). FOS is most commonly between 1.5 and 2.0, although a higher or lower FOS may be considered at the discretion of the pier designer or as dictated by local code or project requirements.

© 2024 Supportworks®
All Rights Reserved

CP288B Bracket Specifications & Capacities when used with the CP288 Push Pier System

Bracket:
Weldment manufactured from ¼", ⅜", ½" and ¾" ASTM A572 Grade 50 plate and HSS 3.00" x 2.00" x 0.25" wall tube x 22" long ASTM A500 Grade C tube

Pier Tube:
Ø2.875" x 0.165" wall x 18" long
Triple-coated in-line galvanized
ASTM A500 Grade C
Yield strength = 50 ksi (min)
Tensile strength = 55 ksi (min)

Pier Tube Coupler:
Ø2.500" x 0.125" wall x 6" long
ASTM A500 Grade B
Yield strength = 50 ksi (min)
Tensile strength = 58 ksi (min)

Pier Starter Tube:
Pier tube section with machined Ø3.375" friction reduction collar pressed around leading end

Cap Plate:
1" x 4.50" x 8.00" ASTM A572 Grade 50 with confining ring on one side

Bracket Hardware[3]:
(2) - Ø¾" x 20" long contour (coil) thread rod AISI 1045
Tensile strength = 120 ksi (min)
Electrozinc plated per ASTM B633

Bracket Finish:
Available plain or hot-dip galvanized[2]

SmartJack/Concentric Pier Base Plate[7]:
Ø3.38" x 0.188" wall x 4.00" long ASTM A53 Grade B pipe
1/8" x 1.38" x 7.34" ASTM A36 bent plate
¼" x 4.00 x 4.00 and 5/16" x 4.50 x 4.50 ASTM A36 plate

Allowable Bracket Capacity[3,4,5,6] R_n/Ω	
	(kips)
Plain	36.7
Plain Corroded[1]	28.5
Grout Filled Corroded[1]	32.1
Maximum Drive Stand Force During Installation[9]	**60.0**

(1) Corroded capacities include a 50-year scheduled sacrificial loss in thickness per ICC-ES AC406. Grout filled piers consider a loss in thickness at the outside diameter only.

(2) Hot-dip galvanized coating in accordance with ASTM A123.

(3) Brackets shall be used for support of structures that are considered to be fixed from translation. Structures that are not fixed from translation shall be braced in some manner prior to installing retrofit bracket systems.

(4) Allowable compression capacities consider continuous lateral soil confinement in soils with SPT N-values ≥ 4. Piers with exposed unbraced lengths or piers placed in weaker or fluid soils should be evaluated on a case-by-case basis by the project engineer.

(5) Concrete bearing assumes a minimum compressive strength (f_c) of 2,500 psi. Local concrete bending and other local design checks should be evaluated on a case-by-case basis by the project engineer.

(6) Push Piers shall be installed with a driving force exceeding the required allowable service load by a sufficient factor of safety (FOS). FOS is most commonly between 1.5 and 2.0, although a higher or lower FOS may be considered at the discretion of the pier designer or as dictated by local code or project requirements.

(7) Refer to *Appendix 4A* for material properties and specifications.

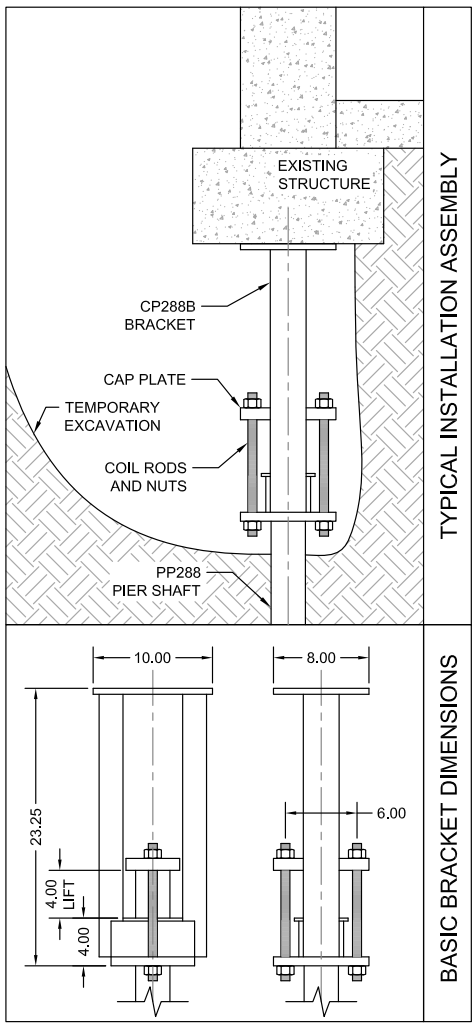

© 2024 Supportworks®
All Rights Reserved

SPBA Bracket Specifications & Capacities when used with the PP288 Push Pier System

Bracket:
Manufactured from ⅜"and ¾" ASTM A572 Grade 50 plate

Pier Tube:
Ø2.875" x 0.165" wall x 36" long
Triple-coated in-line galvanized
ASTM A500 Grade C
Yield strength = 50 ksi (min)
Tensile strength = 55 ksi (min)

Pier Tube Coupler:
Ø2.500" x 0.125" wall x 6" long
ASTM A500 Grade B
Yield strength = 50 ksi (min)
Tensile strength = 58 ksi (min)

Cap Plate:
0.75" x 4.00" x 7.50" ASTM A572 Grade 65

Bracket Hardware:
(2) - Ø⅝" x 14" long all-thread rod Grade B7
Tensile strength = 125 ksi (min)
Electrozinc plated per ASTM B633

Bracket Finish:
Available plain or hot-dip galvanized(2)

Allowable System Capacity = 15,000 lbs.(1, 3, 4)

(1) Capacity listed is a mechanical system capacity only. Local punching shear and slab strength should be checked separately. Underside of slabs should be void filled after any piering operation.

(2) Hot-dip galvanized coating in accordance with ASTM A123.

(3) Brackets shall be used for support of structures that are considered to be fixed from translation. Structures that are not fixed from translation shall be braced in some manner prior to installing retrofit bracket systems.

(4) Allowable compression capacities consider continuous lateral soil confinement in soils with SPT N-values ≥ 4. Piers with exposed unbraced lengths or piers placed in weaker or fluid soils should be evaluated on a case-by-case basis by the project engineer.

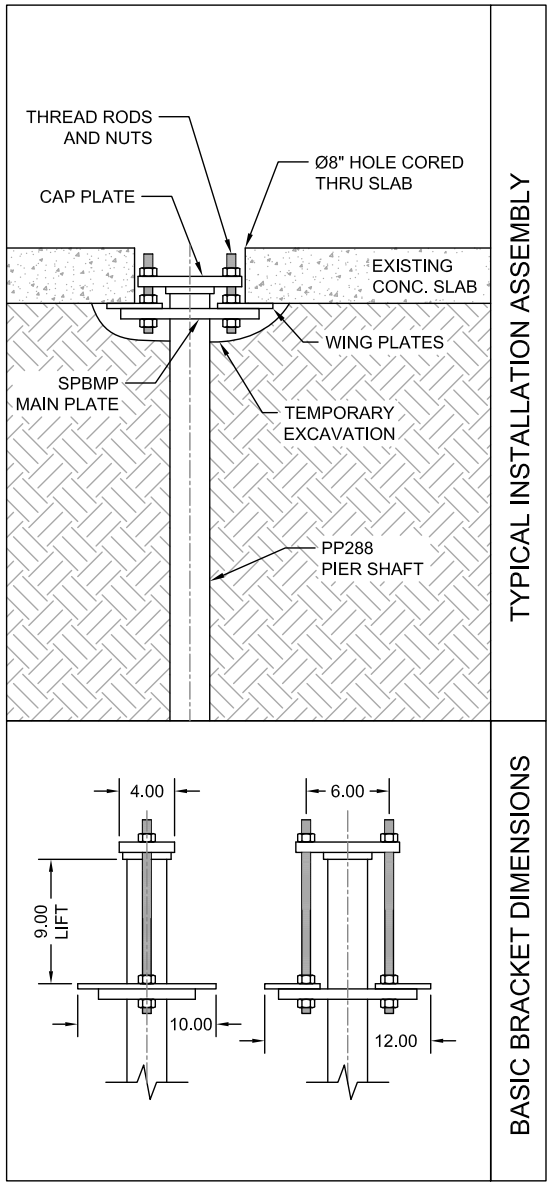

© 2024 Supportworks®
All Rights Reserved

FS350B2 Bracket Specifications & Capacities when used with the PP350 Push Pier System

Bracket:
Weldment manufactured from ¼", ⅜", and ½" ASTM A572 Grade 50 plate and Ø4.50" x 0.337" wall ASTM A500 Grade C pipe

Pier Tube:
Ø3.500" x 0.165" wall x 36" long
Triple-coated in-line galvanized
ASTM A500 Grade C
Yield strength = 50 ksi (min)
Tensile strength = 55 ksi (min)

Pier Tube Coupler:
Ø3.125" x 0.180" wall x 6" long
ASTM A53 Grade B Type E and S
Yield strength = 35 ksi (min)
Tensile strength = 60 ksi (min)

Pier Starter Tube:
Pier tube section with Ø4.000" friction reduction collar welded at leading end

External Sleeve:
Ø4.000" x 0.226" wall x 48" long with trumpet flare at one end
ASTM A500 Grade B or C
Yield strength = 50 ksi (min)
Tensile strength = 62 ksi (min)

Cap Plate:
1¼" x 4.00" x 8.50" ASTM A572 Grade 50

Bracket Hardware[3]:
(2) - Ø⅞" x 24" long all-thread rod Grade B7
Tensile strength = 125 ksi (min)
Electrozinc plated per ASTM B633

Bracket Finish:
Available plain or hot-dip galvanized[2]

Allowable Bracket Capacity[4,5,6,7] R_n/Ω	
	(kips)
Plain	48.7
Plain Corroded[1]	37.6
Grout Filled Corroded[1]	42.7
Maximum Drive Force During Installation[7]	**77.0**

(1) Corroded capacities include a 50-year scheduled sacrificial loss in thickness per ICC-ES AC406. Grout filled piers consider a loss in thickness at the outside diameter only.

(2) Hot-dip galvanized coating in accordance with ASTM A123.

(3) Optional hardware utilizes similar sized contour (coil) thread made from AISI 1045, tensile strength = 120 ksi. Slightly lower tensile strength material does not govern the listed capacities.

(4) Brackets shall be used for support of structures that are considered to be fixed from translation. Structures that are not fixed from translation shall be braced in some manner prior to installing retrofit bracket systems.

(5) Allowable compression capacities consider continuous lateral soil confinement in soils with SPT N-values ≥ 4. Piers with exposed unbraced lengths or piers placed in weaker or fluid soils should be evaluated on a case-by-case basis by the project engineer.

(6) Concrete bearing assumes a minimum compressive strength (f'_c) of 2,500 psi. Local concrete bending and other local design checks should be evaluated on a case-by-case basis by the project engineer.

(7) Push Piers shall be installed with a driving force exceeding the required allowable service load by a sufficient factor of safety (FOS). FOS is most commonly between 1.5 and 2.0, although a higher or lower FOS may be considered at the discretion of the pier designer or as dictated by local code or project requirements.

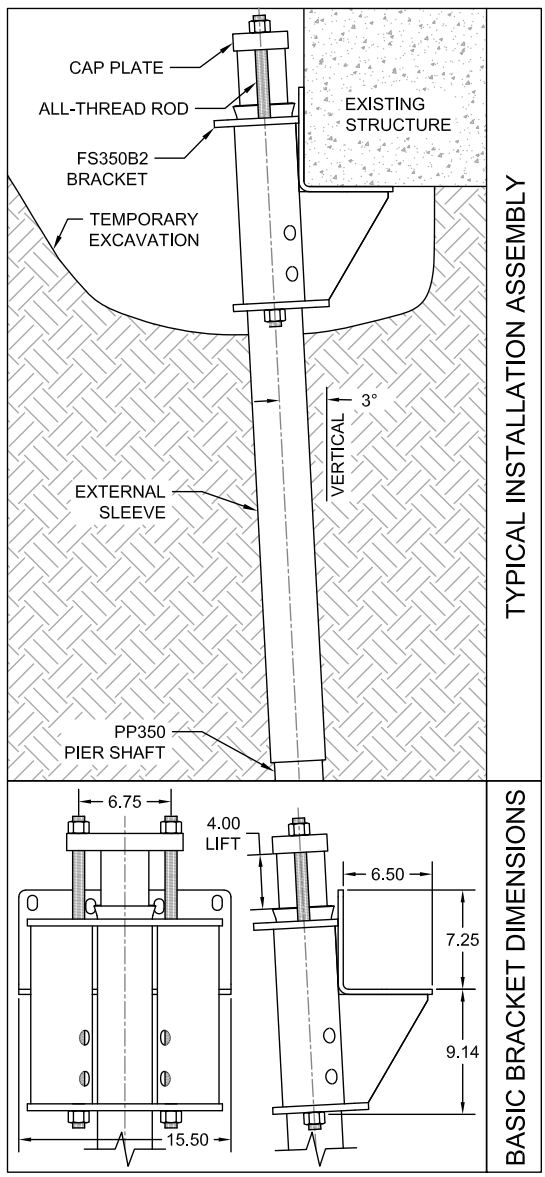

© 2024 Supportworks®
All Rights Reserved

FS350B2V Bracket Specifications & Capacities when used with the PP350 Push Pier System

Bracket:
Weldment manufactured from ¼", ⅜", and ½" ASTM A572 Grade 50 plate and Ø4.50" x 0.337" wall ASTM A500 Grade C pipe

Pier Tube:
Ø3.500" x 0.165" wall x 36" long
Triple-coated in-line galvanized
ASTM A500 Grade C
Yield strength = 50 ksi (min)
Tensile strength = 55 ksi (min)

Pier Tube Coupler:
Ø3.125" x 0.180" wall x 6" long
ASTM A53 Grade B Type E and S
Yield strength = 35 ksi (min)
Tensile strength = 60 ksi (min)

Pier Starter Tube:
Pier tube section with Ø4.000" friction reduction collar welded at leading end

External Sleeve:
Ø4.000" x 0.226" wall x 48" long with trumpet flare at one end
ASTM A500 Grade B or C
Yield strength = 50 ksi (min)
Tensile strength = 62 ksi (min)

Cap Plate:
1¼" x 4.00" x 8.50" ASTM A572 Grade 50

Bracket Hardware[3]:
(2) - Ø⅞" x 24" long all-thread rod Grade B7
Tensile strength = 125 ksi (min)
Electrozinc plated per ASTM B633

Bracket Finish:
Available plain or hot-dip galvanized[2]

Allowable Bracket Capacity[4,5,6,7] R_n/Ω	
	(kips)
Plain	48.7
Plain Corroded[1]	37.6
Grout Filled Corroded[1]	42.7
Maximum Drive Force During Installation[7]	**77.0**

(1) Corroded capacities include a 50-year scheduled sacrificial loss in thickness per ICC-ES AC406. Grout filled piers consider a loss in thickness at the outside diameter only.

(2) Hot-dip galvanized coating in accordance with ASTM A123.

(3) Optional hardware utilizes similar sized contour (coil) thread made from AISI 1045, tensile strength = 120 ksi. Slightly lower tensile strength material does not govern the listed capacities.

(4) Brackets shall be used for support of structures that are considered to be fixed from translation. Structures that are not fixed from translation shall be braced in some manner prior to installing retrofit bracket systems.

(5) Allowable compression capacities consider continuous lateral soil confinement in soils with SPT N-values ≥ 4. Piers with exposed unbraced lengths or piers placed in weaker or fluid soils should be evaluated on a case-by-case basis by the project engineer.

(6) Concrete bearing assumes a minimum compressive strength (f'_c) of 2,500 psi. Local concrete bending and other local design checks should be evaluated on a case-by-case basis by the project engineer.

(7) Push Piers shall be installed with a driving force exceeding the required allowable service load by a sufficient factor of safety (FOS). FOS is most commonly between 1.5 and 2.0, although a higher or lower FOS may be considered at the discretion of the pier designer or as dictated by local code or project requirements.

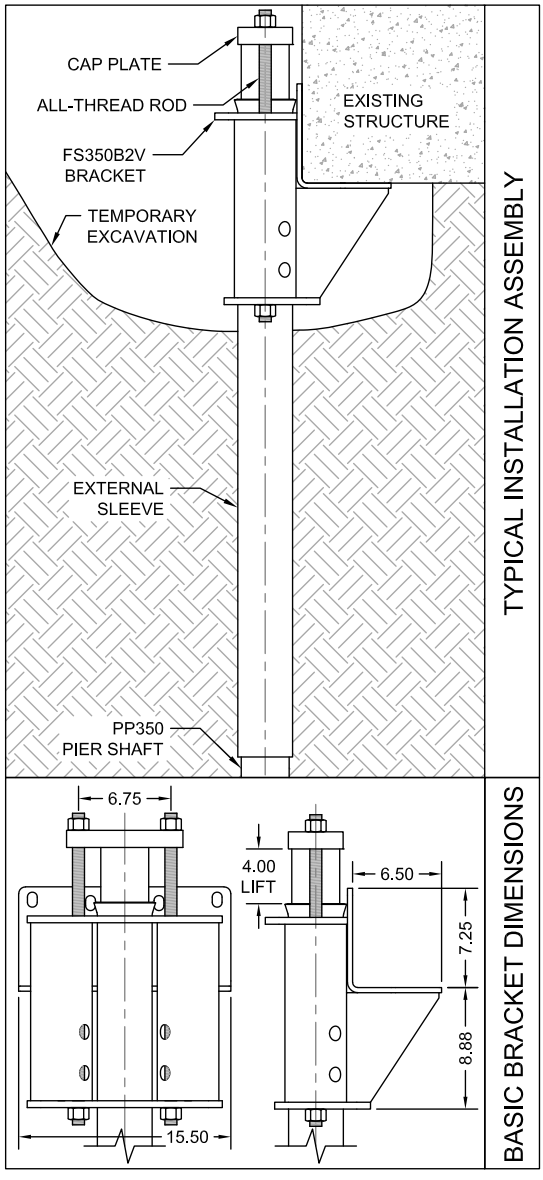

© 2024 Supportworks®
All Rights Reserved

CHAPTER 2

APPENDIX 2B

Drive Stand Specifications

Model 238 Drive Stand Specifications when used with the RED[4] Drive Cylinder (FS35DC)

Compatible Brackets[3]:
FS238B

Drive Cylinder[4] (FS35DC):
Stroke = 22"
Cylinder action = double
Bore = Ø3.50"
Hydraulic area = 9.62 in^2
Max operating pressure[2] = 8,000 psi

Drive Cylinder Adapter:
FSDCA238

Drive Stand Hardware[1]:
(1) - Ø¾" x 12" long coil rod with nuts
(2) - Ø⅝" x 12" long coil rods with nuts
(4) - 1½" Flanged Pins

Drive Stand Rated Drive Load[2,3] 30.0 kips			
Hydraulic Pressure (psi)	**Drive Force[2,3] (kips)**	**Hydraulic Pressure (psi)**	**Drive Force[2,3] (kips)**
200	1.9	2,100	20.2
400	3.8	2,200	21.2
600	5.8	2,300	22.1
800	7.7	2,400	23.1
1,000	9.6	2,500	24.1
1,200	11.5	2,600	25.0
1,400	13.5	2,700	26.0
1,600	15.4	2,800	26.9
1,700	16.4	2,900	27.9
1,800	17.3	3,000	28.9
1,900	18.3	3,100	29.8
2,000	19.2	3,120	30.0

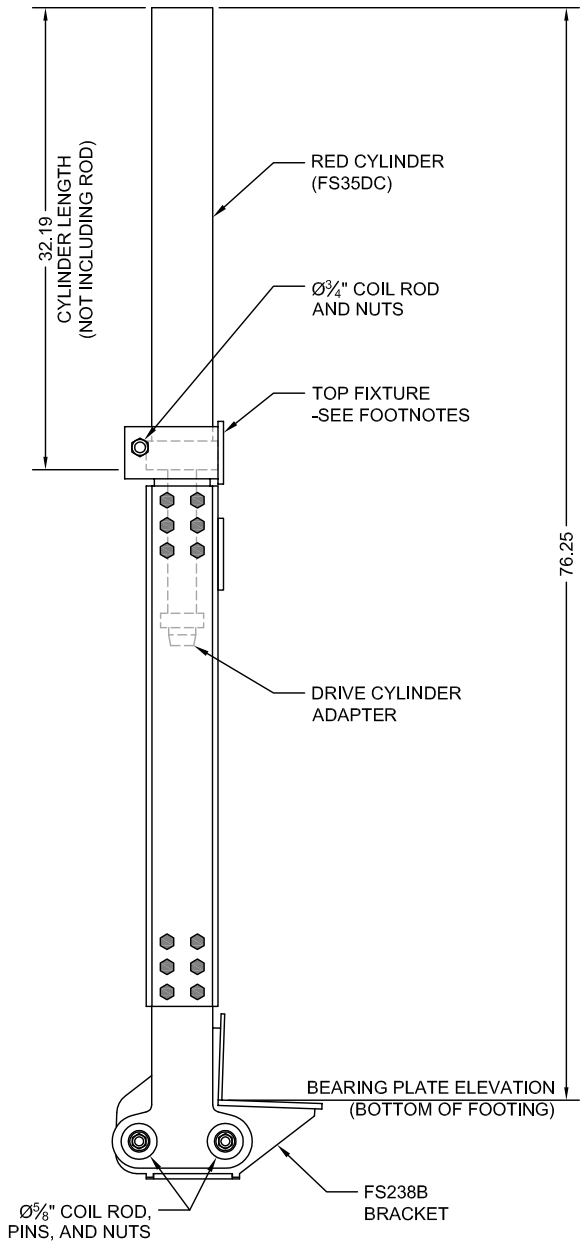

(1) Drive stand should never be operated without all hardware components firmly in place.

(2) Do not operate at pressures that produce drive forces in excess of the drive stand's rated drive load. Max operating pressure of the drive cylinder produces forces that exceed this value and is given for informational purposes only.

(3) Do not operate at pressures that produce drive forces in excess of the "maximum drive force during installation" values specified for the bracket being installed (see *Bracket Specifications & Capacities*).

(4) Note that the mounting flange dimensions are different between the RED and GRAY cylinders (FS35DC and FS425DC) and thereby require the use of unique top fixture weldments that correspond to the appropriate drive cylinder.

© 2024 Supportworks®
All Rights Reserved

Model 238 Drive Stand Specifications when used with the GRAY[4] Drive Cylinder (FS425DC)

Compatible Brackets[3]:
FS238B

Drive Cylinder[4] (FS425DC):
Stroke = 22"
Cylinder action = double
Bore = Ø4.25"
Hydraulic area = 14.18 in^2
Max operating pressure[2] = 4,000 psi

Drive Cylinder Adapter:
FSDCA238

Drive Stand Hardware[1]:
(1) - Ø¾" x 12" long coil rod with nuts
(2) - Ø⅝" x 12" long coil rods with nuts
(4) - 1½" Flanged Pins

Drive Stand Rated Drive Load[2,3] 30.0 kips			
Hydraulic Pressure (psi)	**Drive Force[2,3] (kips)**	**Hydraulic Pressure (psi)**	**Drive Force[2,3] (kips)**
100	1.4	1,300	18.4
200	2.8	1,400	19.9
300	4.3	1,500	21.3
400	5.7	1,600	22.7
500	7.1	1,700	24.1
600	8.5	1,800	25.5
700	9.9	1,900	27.0
800	11.3	2,000	28.4
900	12.8	2,100	29.8
1,000	14.2	2,115	30.0
1,100	15.6		
1,200	17.0		

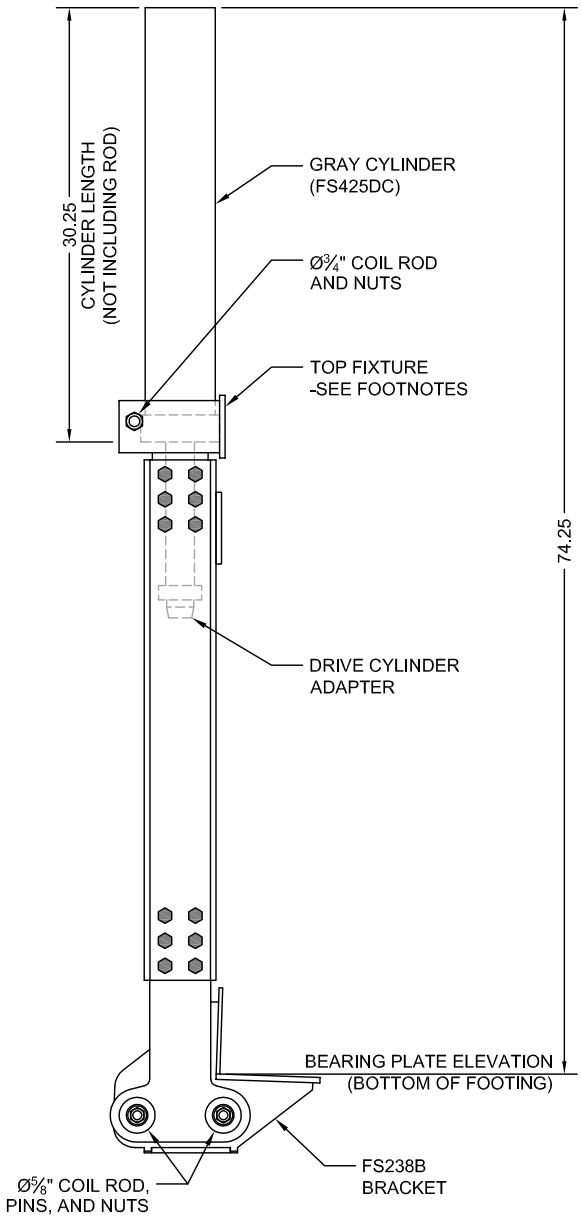

(1) Drive stand should never be operated without all hardware components firmly in place.

(2) Do not operate at pressures that produce drive forces in excess of the drive stand's rated drive load. Max operating pressure of the drive cylinder produces forces that exceed this value and is given for informational purposes only.

(3) Do not operate at pressures that produce drive forces in excess of the "maximum drive force during installation" values specified for the bracket being installed (see *Bracket Specifications & Capacities*).

(4) Note that the mounting flange dimensions are different between the RED and GRAY cylinders (FS35DC and FS425DC) and thereby require the use of unique top fixture weldments that correspond to the appropriate drive cylinder.

© 2024 Supportworks®
All Rights Reserved

Model 288 Drive Stand Specifications when used with the RED[5] Drive Cylinder (FS35DC)

Compatible Brackets[3]:
FS288BL2, FS288BFM, FS288BL2V, SPBA (when used with the SPDA adapter - See Slab Pier Detail)

Drive Cylinder[5] (FS35DC):
Stroke = 22"
Cylinder action = double
Bore = Ø3.50"
Hydraulic area = 9.62 in^2
Max operating pressure[2] = 8,000 psi

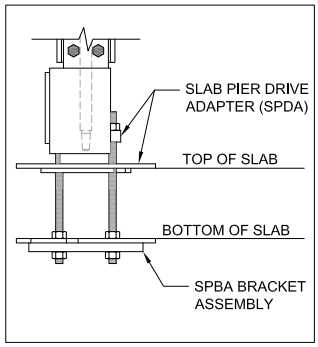

Slab Pier Detail

Drive Cylinder Adapter[4]:
FSDCA (reversible)

Drive Stand Hardware[1]:
(1) - Ø¾" x 12" long coil rod with nuts
(2) - Ø1" x 15" long L-pins

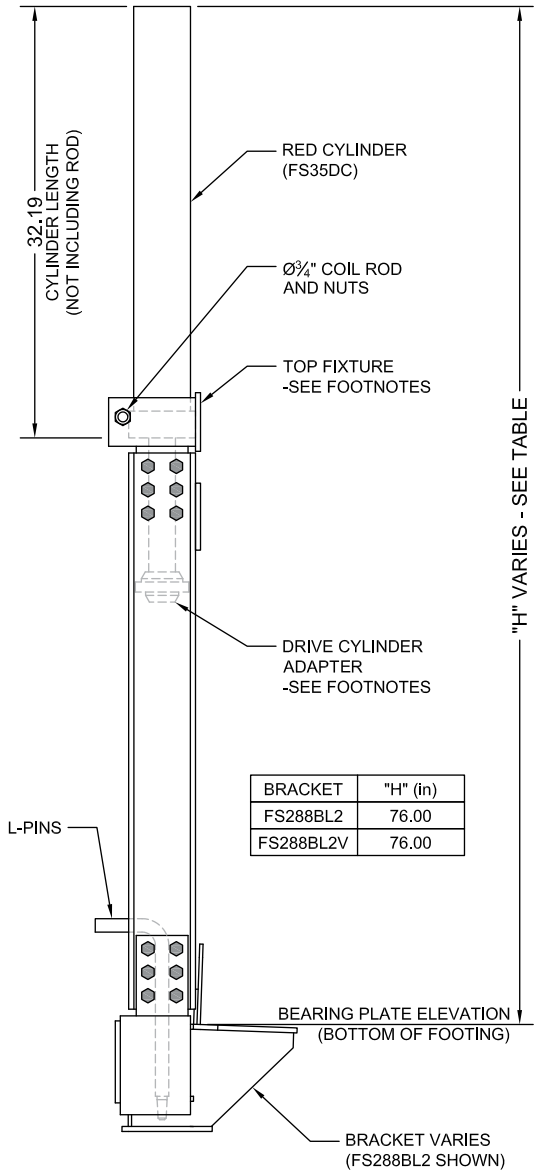

Drive Stand Rated Drive Load[2,3] 60.0 kips			
Hydraulic Pressure (psi)	**Drive Force[2,3] (kips)**	**Hydraulic Pressure (psi)**	**Drive Force[2,3] (kips)**
400	3.8	4,200	40.4
800	7.7	4,400	42.3
1,200	11.5	4,600	44.3
1,600	15.4	4,800	46.2
2,000	19.2	5,000	48.1
2,400	23.1	5,200	50.0
2,800	26.9	5,400	52.0
3,200	30.8	5,600	53.9
3,400	32.7	5,800	55.8
3,600	34.6	6,000	57.7
3,800	36.6	6,200	59.7
4,000	38.5	6,235	60.0

(1) Drive stand should never be operated without all hardware components firmly in place.

(2) Do not operate at pressures that produce drive forces in excess of the drive stand's rated drive load. Max operating pressure of the drive cylinder produces forces that exceed this value and is given for informational purposes only.

(3) Do not operate at pressures that produce drive forces in excess of the "maximum drive force during installation" values specified for the bracket being installed (see *Bracket Specifications & Capacities*).

(4) Drive cylinder adapter FSDCA is a reversible adapter that is compatible with both PP288 and PP350 push pier systems. Assemble the adapter to the cylinder rod in the appropriate orientation for the corresponding pier size being installed.

(5) Note that the mounting flange dimensions are different between the RED and GRAY cylinders (FS35DC and FS425DC) and thereby require the use of unique top fixture weldments that correspond to the appropriate drive cylinder.

© 2024 Supportworks®
All Rights Reserved

Model 288 Drive Stand Specifications when used with the GRAY[4] Drive Cylinder (FS425DC)

Compatible Brackets[2]:
FS288BL2, FS288BL2V, FS288BFM, SPBA (when used with the SPDA adapter - See Slab Pier Detail)

Drive Cylinder[4] (FS425DC):
Stroke = 22"
Cylinder action = double
Bore = Ø4.25"
Hydraulic area = 14.18 in^2
Max operating pressure = 4,000 psi

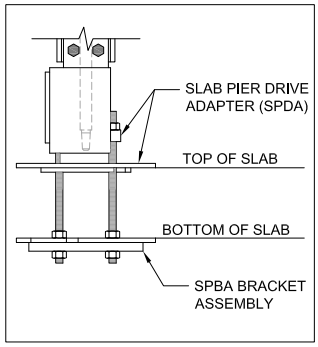

Slab Pier Detail

Drive Cylinder Adapter[3]:
FSDCA (reversible)

Drive Stand Hardware[1]:
(1) - Ø¾" x 12" long coil rod with nuts
(2) - Ø1" x 15" long L-pins

Drive Stand Rated Drive Load[2] 56.7 kips			
Hydraulic Pressure (psi)	**Drive Force[2] (kips)**	**Hydraulic Pressure (psi)**	**Drive Force[2] (kips)**
200	2.8	2,600	36.9
400	5.7	2,800	39.7
600	8.5	3,000	42.6
800	11.3	3,200	45.4
1,000	14.2	3,300	46.8
1,200	17.0	3,400	48.2
1,400	19.9	3,500	49.7
1,600	22.7	3,600	51.1
1,800	25.5	3,700	52.5
2,000	28.4	3,800	53.9
2,200	31.2	3,900	55.3
2,400	34.0	4,000	56.7

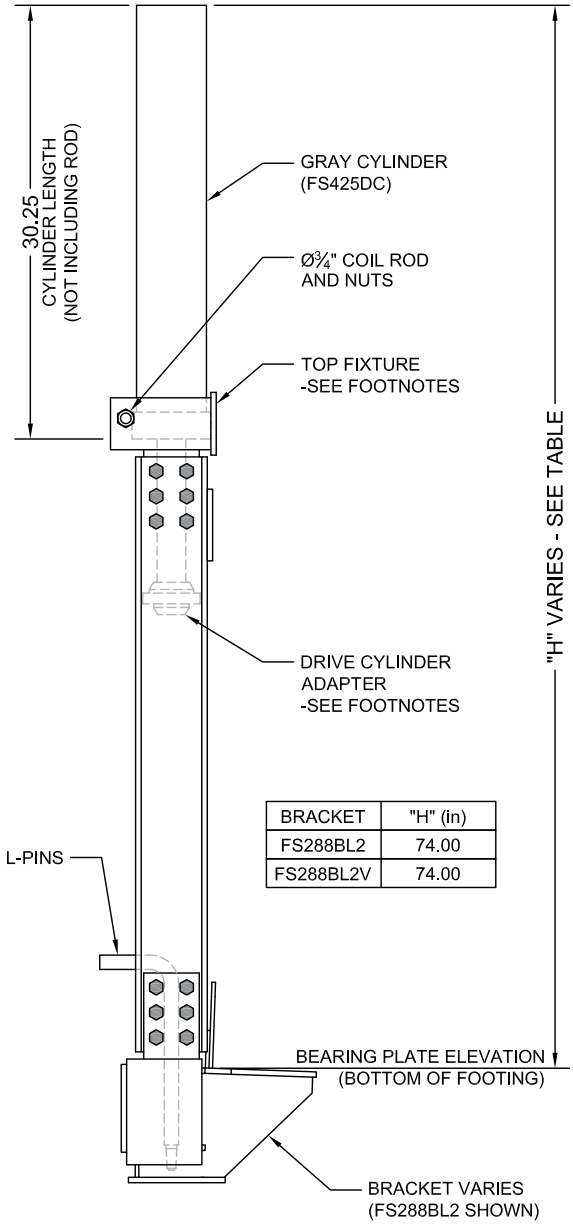

BRACKET	"H" (in)
FS288BL2	74.00
FS288BL2V	74.00

(1) Drive stand should never be operated without all hardware components firmly in place.

(2) Do not operate at pressures that produce drive forces in excess of the "maximum drive force during installation" values specified for the bracket being installed (see *Bracket Specifications & Capacities*).

(3) Drive cylinder adapter FSDCA is a reversible adapter that is compatible with both PP288 and PP350 push pier systems. Assemble the adapter to the cylinder rod in the appropriate orientation for the corresponding pier size being installed.

(4) Note that the mounting flange dimensions are different between the RED and GRAY cylinders (FS35DC and FS425DC) and thereby require the use of unique top fixture weldments that correspond to the appropriate drive cylinder.

© 2024 Supportworks®
All Rights Reserved

Model 288 Crawl Space Drive Stand Specifications
when used with the SHORT RED Drive Cylinder (FS35CSDC)

Compatible Brackets[3]:
FS288BL2, FS288BL2V, FS288BFM, SPBA (when used with the SPDA adapter - See Slab Pier Detail)

Drive Cylinder (FS35CSDC):
Stroke = 13"
Cylinder action = double
Bore = Ø3.50"
Hydraulic area = 9.62 in^2
Max operating pressure[2] = 8,000 psi

Drive Cylinder Adapter[4]:
FSDCA (reversible)

Drive Stand Hardware[1]:
(1) - Ø¾" x 12" long coil rod with nuts
(2) - Ø1" x 15" long L-pins

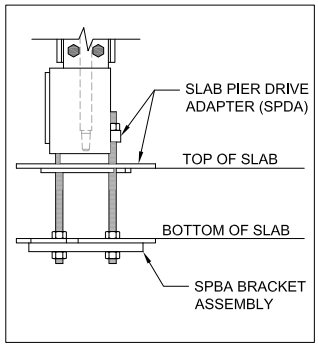

Slab Pier Detail

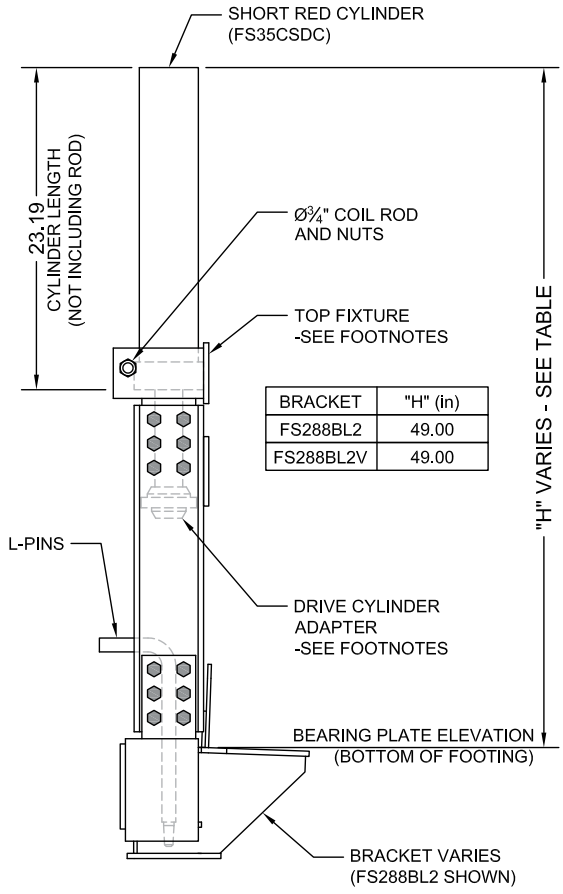

Drive Stand Rated Drive Load[2,3] 60.0 kips			
Hydraulic Pressure (psi)	**Drive Force[2,3] (kips)**	**Hydraulic Pressure (psi)**	**Drive Force[2,3] (kips)**
400	3.8	4,200	40.4
800	7.7	4,400	42.3
1,200	11.5	4,600	44.3
1,600	15.4	4,800	46.2
2,000	19.2	5,000	48.1
2,400	23.1	5,200	50.0
2,800	26.9	5,400	52.0
3,200	30.8	5,600	53.9
3,400	32.7	5,800	55.8
3,600	34.6	6,000	57.7
3,800	36.6	6,200	59.7
4,000	38.5	6,235	60.0

(1) Drive stand should never be operated without all hardware components firmly in place.

(2) Do not operate at pressures that produce drive forces in excess of the drive stand's rated drive load. Max operating pressure of the drive cylinder produces forces that exceed this value and is given for informational purposes only.

(3) Do not operate at pressures that produce drive forces in excess of the "maximum drive force during installation" values specified for the bracket being installed (see *Bracket Specifications & Capacities*).

(4) Drive cylinder adapter FSDCA is a reversible adapter that is compatible with both PP288 and PP350 push pier systems. Assemble the adapter to the cylinder rod in the appropriate orientation for the corresponding pier size being installed.

© 2024 Supportworks®
All Rights Reserved

Model 237 Concentric Drive Stand Specifications when used with an Enerpac RC-156 Drive Cylinder

Drive Cylinder (CP238DC):
Stroke = 6.00"
Cylinder action = single
Bore = Ø2.00"
Hydraulic area = 3.14 in^2
Max operating pressure[2] = 10,000[3] psi

Drive Stand Hardware[1]:
(2) - Ø⅝" x 12" long coil rod with nuts

Drive Stand Rated Drive Load[2] 30.0 kips			
Hydraulic Pressure (psi)	**Drive Force[2] (kips)**	**Hydraulic Pressure (psi)**	**Drive Force[2] (kips)**
400	1.3	5,200	16.3
800	2.5	5,600	17.6
1,200	3.8	6,000	18.8
1,600	5.0	6,400	20.1
2,000	6.3	6,800	21.4
2,400	7.5	7,200	22.6
2,800	8.8	7,600	23.9
3,200	10.0	8,000	25.1
3,600	11.3	8,400	26.4
4,000	12.6	8,800	27.6
4,400	13.8	9,200	28.9
4,800	15.1	9,550	30.0

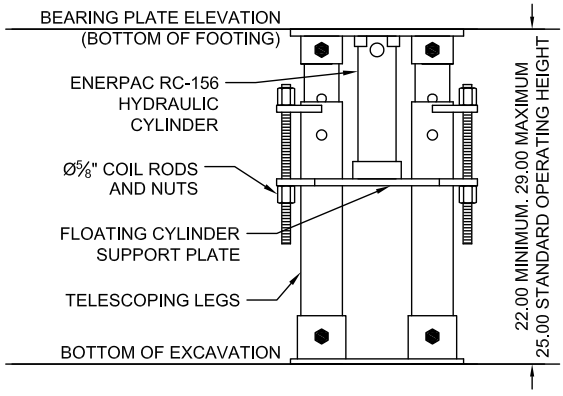

(1) Drive stand should never be operated without all hardware components firmly in place.

(2) Do not operate at pressures that produce drive forces in excess of the drive stand's rated drive load.

(3) Cylinder manufacturer's rating of load and pressure are maximum safe limits. Manufacturer encourages using only 80% of these ratings as good practice.

(4) Note that the Model CP237 concentric pier system is primarily used as an intermediate foundation alternative to the standard shallow SmartJack footing options. Refer to Appendix 4A for graphic illustration and material properties and specifications of the CP237 system when used with the SJ288 or SJQ350 systems.

© 2024 Supportworks®
All Rights Reserved

Model 288 Concentric Drive Stand Specifications when used with an Enerpac RR-308 Drive Cylinder

Drive Cylinder (CP288DC):
Stroke = 8.25"
Cylinder action = double
Bore = Ø2.88"
Hydraulic area = 6.51 in^2
Max operating pressure[2] = 10,000[3] psi

Drive Stand Hardware[1]:
(2) - Ø¾" x 20" long coil rod with nuts

Drive Stand Rated Drive Load[2] 60.0 kips			
Hydraulic Pressure (psi)	**Drive Force[2] (kips)**	**Hydraulic Pressure (psi)**	**Drive Force[2] (kips)**
400	2.6	5,200	33.9
800	5.2	5,600	36.5
1,200	7.8	6,000	39.1
1,600	10.4	6,400	41.7
2,000	13.0	6,800	44.3
2,400	15.6	7,200	46.9
2,800	18.2	7,600	49.5
3,200	20.8	8,000	52.1
3,600	23.4	8,400	54.7
4,000	26.0	8,800	57.3
4,400	28.6	9,200	59.9
4,800	31.2	9,220	60.0

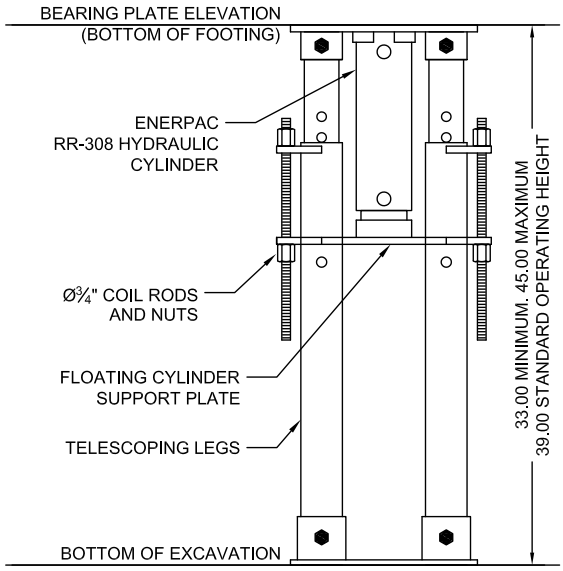

(1) Drive stand should never be operated without all hardware components firmly in place.

(2) Do not operate at pressures that produce drive forces in excess of the drive stand's rated drive load.

(3) Cylinder manufacturer's rating of load and pressure are maximum safe limits. Manufacturer encourages using only 80% of these ratings as good practice.

© 2024 Supportworks®
All Rights Reserved

Model 350 Drive Stand Specifications when used with the RED Drive Cylinder (FS35DC)

Compatible Brackets[2]:
FS350B2 and FS350B2V

Drive Cylinder (FS35DC):
Stroke = 22"
Cylinder action = double
Bore = Ø3.50"
Hydraulic area = 9.62 in^2
Max operating pressure = 8,000 psi

Drive Cylinder Adapter[3]:
FSDCA (reversible)

Drive Stand Hardware[1]:
(1) - Ø¾" x 12" long coil rod with nuts
(2) - Ø¾" grade 8 bolts with nuts

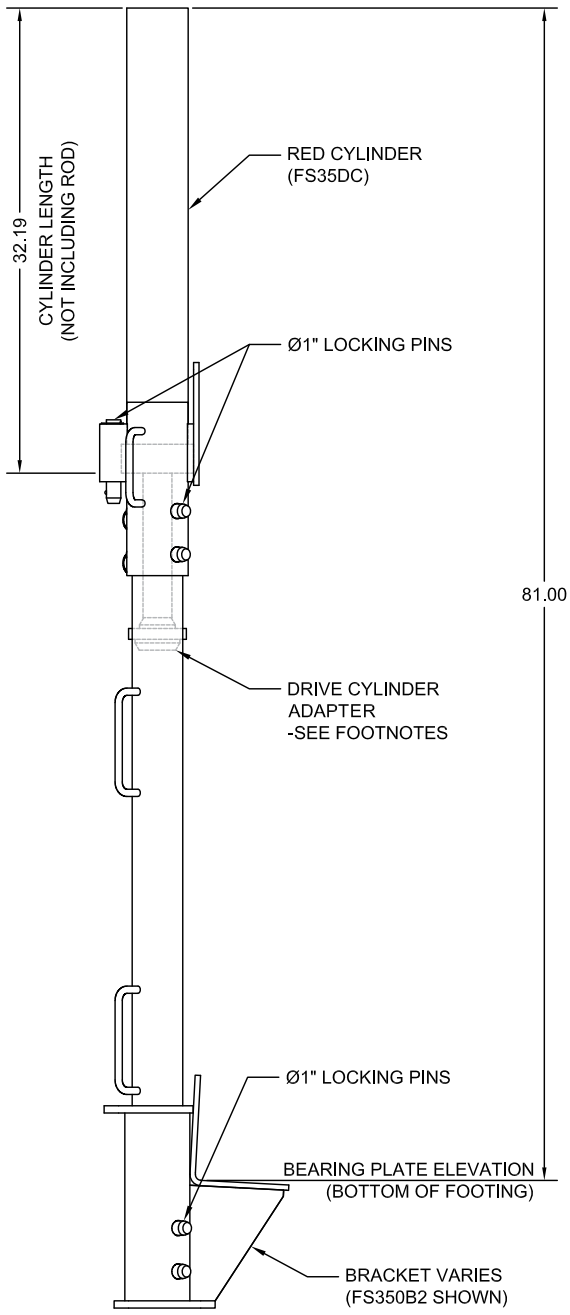

Drive Stand Rated Drive Load[2] 77.0 kips			
Hydraulic Pressure (psi)	**Drive Force[2] (kips)**	**Hydraulic Pressure (psi)**	**Drive Force[2] (kips)**
400	3.8	5,200	50.0
800	7.7	5,600	53.9
1,200	11.5	6,000	57.7
1,600	15.4	6,400	61.6
2,000	19.2	6,600	63.5
2,400	23.1	6,800	65.4
2,800	26.9	7,000	67.3
3,200	30.8	7,200	69.3
3,600	34.6	7,400	71.2
4,000	38.5	7,600	73.1
4,400	42.3	7,800	75.0
4,800	46.2	8,000	77.0

(1) Drive stand should never be operated without all hardware components firmly in place.

(2) Do not operate at pressures that produce drive forces in excess of the "maximum drive force during installation" values specified for the bracket being installed (see *Bracket Specifications & Capacities*).

(3) Note that drive cylinder adapter FSDCA is reversible and needs to be assembled in the appropriate orientation when installing PP350 systems.

© 2024 Supportworks®
All Rights Reserved

CHAPTER 2

APPENDIX 2C

Lift Assembly Specifications

Model 238 Lift Assembly Specifications

Compatible Brackets[3]:
FS238B

Lift Cylinder (FS256LC):
Stroke = 4"
Cylinder action = single
Bore = Ø2.56"
Hydraulic area = 5.15 in^2
Max operating pressure[2] = 8,000 psi

Lift Assembly Hardware[1]:
(2) - Ø⅝" x 16" long coil rod
with nuts and hex couplers, or
(2) - Ø⅝" x 14" long all-thread rod
with nuts and hex couplers

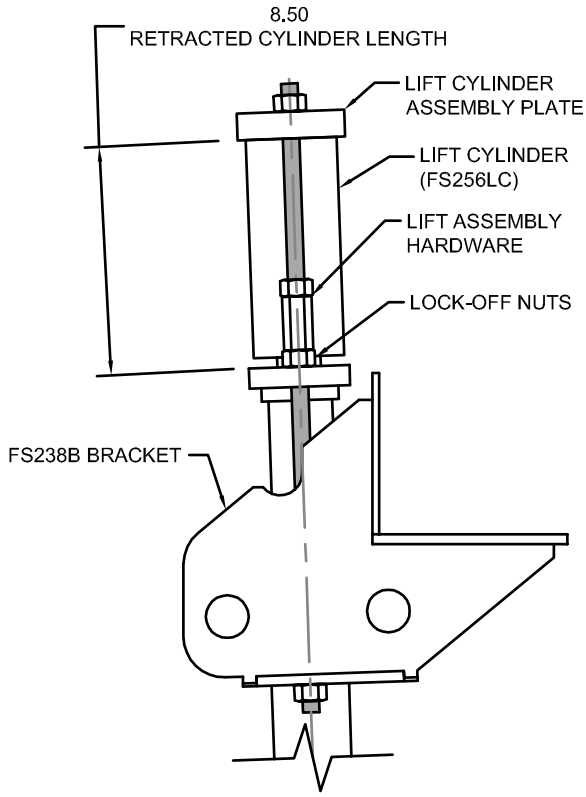

Lift Assembly Rated Lifting Load[2,3] 27.6 kips			
Hydraulic Pressure (psi)	**Lift Force[2,3] (kips)**	**Hydraulic Pressure (psi)**	**Lift Force[2,3] (kips)**
400	2.1	3,200	16.5
800	4.1	3,400	17.5
1,200	6.2	3,600	18.6
1,400	7.2	3,800	19.6
1,600	8.3	4,000	20.6
1,800	9.3	4,200	21.7
2,000	10.3	4,400	22.7
2,200	11.3	4,600	23.7
2,400	12.4	4,800	24.8
2,600	13.4	5,000	25.8
2,800	14.4	5,200	26.8
3,000	15.5	5,350	27.6

(1) Hardware used in the lift assembly must be selected to match the hardware used with the installed bracket assembly.

(2) Do not operate at pressures that produce lift forces in excess of the lift assembly's rated lifting load. Max operating pressure of the lift cylinder produces forces that exceed this value and is given for informational purposes only.

(3) Rated lifting load is given for the lift assembly only. Do not operate at pressures that exceed the allowable capacities of the system which are governed by the allowable capacities of the bracket and other system components, as well as the torque-correlated soil capacity, or installed driving force divided by an appropriate factor of safety. All of these governing limits are outlined in places elsewhere in the chapter appendices.

© 2024 Supportworks®
All Rights Reserved

Model 288 Lift Assembly[2] Specifications

Compatible Brackets[4]:
HP238B2, HP288B2, FS288BL2, FS288BL2V, FS288BFM, SPBA (when used with the SPLCAP assembly - See Slab Pier Detail)

Lift Cylinder (FS35LC):
Stroke = 4"
Cylinder action = double
Bore = Ø3.50"
Hydraulic area = 9.62 in^2
Max operating pressure[3] = 8,000 psi

Lift Assembly Hardware[1,2]:
(2) - Ø¾" x 16" long all-thread rod with nuts and hex couplers, or
(2) - Ø¾" x 16" long coil rod with nuts and hex couplers

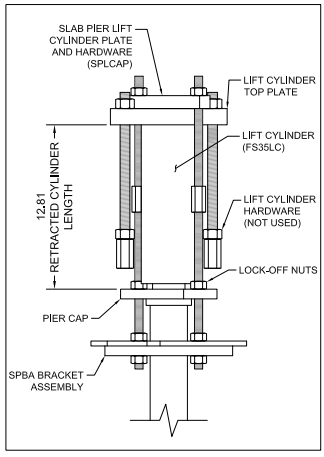

Slab Pier Detail

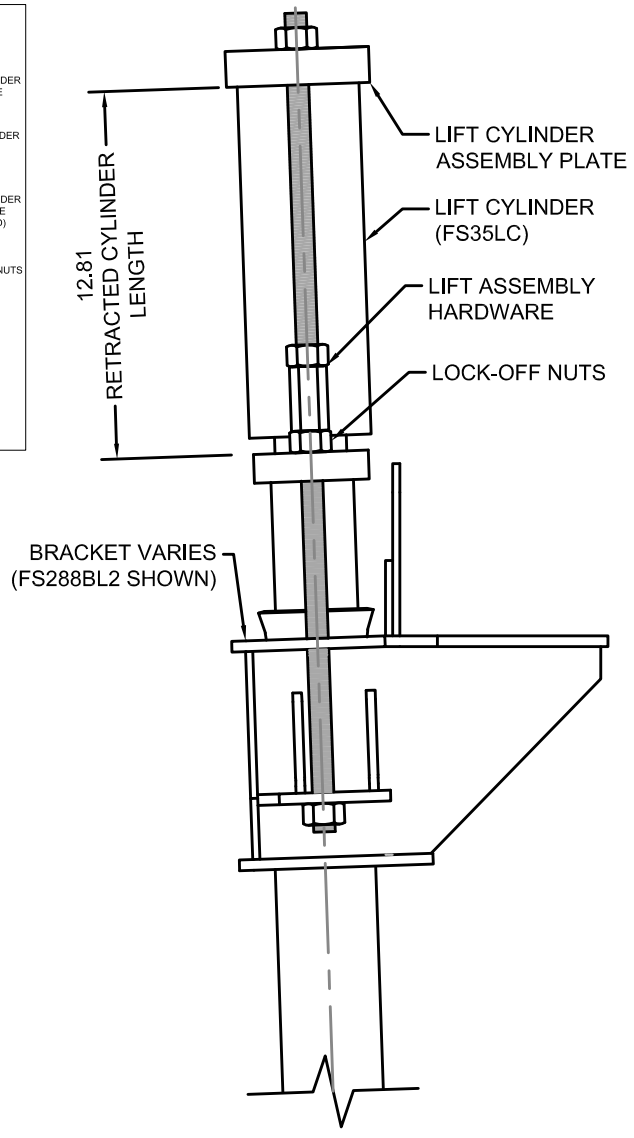

Lift Assembly Rated Lifting Load[3,4] 39.7 kips			
Hydraulic Pressure (psi)	**Lift Force[3,4] (kips)**	**Hydraulic Pressure (psi)**	**Lift Force[3,4] (kips)**
200	1.9	2,600	25.0
400	3.8	2,800	26.9
600	5.8	3,000	28.9
800	7.7	3,200	30.8
1,000	9.6	3,400	32.7
1,200	11.5	3,600	34.6
1,400	13.5	3,700	35.6
1,600	15.4	3,800	36.6
1,800	17.3	3,900	37.5
2,000	19.2	4,000	38.5
2,200	21.2	4,100	39.4
2,400	23.1	4,130	39.7

(1) Hardware used in the lift assembly must be selected to match the hardware used with the installed bracket assembly.

(2) Note that the only difference between the Model 288 and Model 350 lift assemblies is the diameter of the threaded rod hardware. All other components of the two assemblies are identical.

(3) Do not operate at pressures that produce lift forces in excess of the lift assembly's rated lifting load. Max operating pressure of the lift cylinder produces forces that exceed this value and is given for informational purposes only.

(4) Rated lifting load is given for the lift assembly only. Do not operate at pressures that exceed the allowable capacities of the system which are governed by the allowable capacities of the bracket and other system components, as well as the torque-correlated soil capacity, or installed driving force divided by an appropriate factor of safety. All of these governing limits are outlined in places elsewhere in the chapter appendices.

© 2024 Supportworks®
All Rights Reserved

Model 288 Concentric Lift Assembly Specifications

Compatible Bracket[3]:
CP288B

Lift Cylinder (FS35LC):
Stroke = 4"
Cylinder action = double
Bore = Ø3.50"
Hydraulic area = 9.62 in^2
Max operating pressure[1] = 8,000 psi

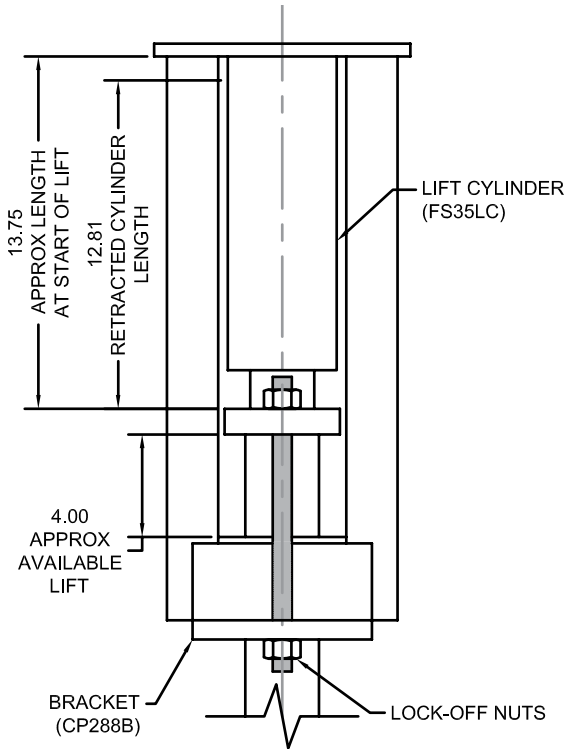

Lift Assembly Rated Lifting Load[1,2] 36.7 kips			
Hydraulic Pressure (psi)	**Lift Force[1,2] (kips)**	**Hydraulic Pressure (psi)**	**Lift Force[1,2] (kips)**
200	1.9	2,600	25.0
400	3.8	2,800	26.9
600	5.8	3,000	28.9
800	7.7	3,100	29.8
1,000	9.6	3,200	30.8
1,200	11.5	3,300	31.7
1,400	13.5	3,400	32.7
1,600	15.4	3,500	33.7
1,800	17.3	3,600	34.6
2,000	19.2	3,700	35.6
2,200	21.2	3,800	36.6
2,400	23.1	3,815	36.7

(1) Do not operate at pressures that produce lift forces in excess of the lift assembly's rated lifting load. Max operating pressure of the lift cylinder produces forces that exceed this value and is given for informational purposes only.

(2) Rated lifting load is given for the lift assembly only. Do not operate at pressures that exceed the allowable capacities of the system which are governed by the allowable capacities of the bracket and other system components, as well as the torque-correlated soil capacity, or installed driving force divided by an appropriate factor of safety.

© 2024 Supportworks®
All Rights Reserved

Model 350 Lift Assembly[1] Specifications

Compatible Brackets[3]:
FS350B2 and FS350B2V

Lift Cylinder (FS35LC):
Stroke = 4"
Cylinder action = double
Bore = Ø3.50"
Hydraulic area = 9.62 in^2
Max operating pressure[2] = 8,000 psi

Lift Assembly Hardware[1]:
(2) - Ø⅞" x 18" long all-thread rod
with nuts and hex couplers

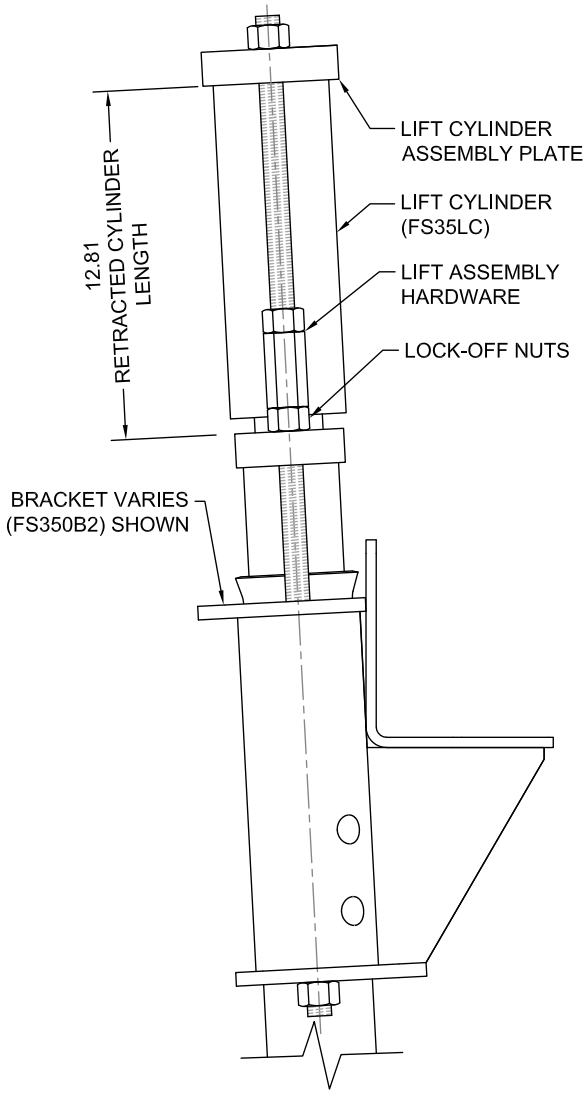

Lift Assembly Rated Lifting Load[2,3] 56.3 kips			
Hydraulic Pressure (psi)	**Lift Force[2,3] (kips)**	**Hydraulic Pressure (psi)**	**Lift Force[2,3] (kips)**
400	3.8	3,800	36.6
800	7.7	4,000	38.5
1,200	11.5	4,200	40.4
1,600	15.4	4,400	42.3
2,000	19.2	4,600	44.3
2,400	23.1	4,800	46.2
2,600	25.0	5,000	48.1
2,800	26.9	5,200	50.0
3,000	28.9	5,400	52.0
3,200	30.8	5,600	53.9
3,400	32.7	5,800	55.8
3,600	34.6	5,850	56.3

(1) Note that the only difference between the Model 288 and Model 350 lift assemblies is the diameter of the threaded rod hardware. All other components of the two assemblies are identical.

(2) Do not operate at pressures that produce lift forces in excess of the lift assembly's rated lifting load. Max operating pressure of the lift cylinder produces forces that exceed this value and is given for informational purposes only.

(3) Rated lifting load is given for the lift assembly only. Do not operate at pressures that exceed the allowable capacities of the system which are governed by the allowable capacities of the bracket and other system components, as well as the torque-correlated soil capacity, or installed driving force divided by an appropriate factor of safety. All of these governing limits are outlined in places elsewhere in the chapter appendices.

© 2024 Supportworks®
All Rights Reserved

CHAPTER 3

Wall Stabilization Systems

3.1 Introduction

Foundation Supportworks is more than an industry leader in helical foundation systems and hydraulically driven push pier systems. Foundation Supportworks is also a well-known manufacturer and distributor of wall stabilization solutions that are more commonly marketed for and installed on residential projects, yet are occasionally considered for commercial applications as well.

The GeoLock® Wall Anchor System, PowerBrace™ Wall Bracing System, and CarbonArmor® Wall Reinforcing System are used to stabilize foundation walls that are experiencing inward movement and distress due to excessive lateral earth or hydrostatic pressures generated by unbalanced soil conditions. This chapter focuses on how these types of problems occur and how each of these distinctly different repair systems function.

3.1.1 Construction Methods

There are two methods of wall construction that cover the majority of residential foundation walls that exist today. The first of these methods utilizes concrete blocks. These blocks are also called concrete masonry units (CMU). Another common term is cinder block which is widely considered to be synonymous with CMU. There was a time when CMU walls were used to build almost all of the residential foundation walls in the United States. There was a transition period between the mid-1970s and mid-1980s where the preferred method of construction moved away from CMU walls and toward poured concrete walls. Concrete was made more available and concrete mixing, hauling and placing equipment became more advanced and affordable. It also required much less labor to place concrete into formwork than was needed to build a wall block by block.

There are still a great deal of CMU foundation walls out there, but the most popular material in new construction homes today is poured concrete. Economy and speed were the factors that drove the primary construction method from CMU to poured concrete, but another benefit that poured concrete has is its superior strength. CMU blocks are bonded to and separated from the adjacent blocks with mortar. CMU blocks are initially hollow when they are placed. These hollow areas can be reinforced with steel and filled with a cementitious grout. Even so, reinforced CMU walls generally do not achieve the level of strength that can be found in reinforced poured concrete walls. This does not make poured concrete walls immune to the types of foundation wall problems that we will discuss in this chapter, but it has made them much less frequent.

Other far less common foundation wall systems that exist in current residential construction practice include precast concrete panels, concrete placed within insulated concrete forms, and wood foundation walls constructed from dimensional lumber and plywood. Older buildings, i.e., those generally constructed more than a half-century ago, may have been constructed with still other materials. Foundation walls constructed of brick, clay tile, and field stone can still be found beneath homes and buildings in older parts of cities and in rural communities.

This chapter discussion focuses on poured concrete and CMU walls and stabilization products that are best suited for these wall types. The intention is not to preclude the use of these products on any other type of wall system, although it does generally require more thought and consideration on behalf of the design professional regarding applicability and performance.

© 2024 Supportworks®
All Rights Reserved

3.1.2 Evidence of Distress

It's important to understand the differences in construction methods because each method will show different signs of distress. Most of the cracks that develop in a CMU wall will be found in the mortar joints. This is because the joint is weaker than the block so the earliest symptoms of distress will develop from the weakest points. The most common type of crack found in a CMU wall that is failing due to lateral earth pressure is a long, horizontal crack across most of the length of the wall. This crack usually occurs at about mid height or maybe even a little higher than that. This creates a sort of "belly" shape in the wall that is commonly called "bowing." The point of maximum inward movement is found at the elevation of the horizontal crack. The corners of the foundation wall offer more strength and stiffness so the horizontal crack does not extend all the way to the corner. Instead, two cracks follow the mortar joints in a stair step pattern from the horizontal crack toward the top and bottom corners of the wall (*Figure 3.1*). This crack pattern is evidence that the bending strength of the wall is inadequate to support the lateral forces that are pushing on it from the outside.

Figure 3.1 Typical stair step crack pattern on a bowing CMU wall

A failing poured concrete wall looks quite different. Instead of having a bowing "belly" shape, the wall itself typically stays straight, but tends to lean in at the top. This happens because, as was explained earlier, the poured concrete wall is quite a bit stronger. Because of this additional strength, you could say that it's not really the wall that is failing. A foundation wall has to have the strength to resist the lateral earth pressures, but it also needs to be properly connected at the top and the bottom so it can deliver these forces to the structural elements that support it. At the bottom, the wall is held in place by the concrete basement slab which is a very strong, rigid connection. At the top, it's held in place by the entry level's wood floor system. When a poured concrete wall is leaning in at the top, it's really a failure of the wall's top connection, not of the wall itself. The wall itself is still straight and largely intact, but it is out of plumb. The point of maximum deflection is at the top of the wall. The corners of the foundation wall still offer more strength and stiffness so the movement at the top of the wall does not extend all the way to the corners. The bottom of the wall and the vertical edges of the wall are well restrained so the major cracks you will find will originate at the bottom corners of the wall and extend diagonally up toward the top center of the wall (*Figure 3.2*).

Figure 3.2 Poured concrete walls often lean in at the top and show less cracking in the interior portions of the wall

© 2024 Supportworks®
All Rights Reserved

3.1.3 Causes of Failure

Inward movement of foundation walls is not a problem that's reserved only for older structures that have naturally deteriorated and weakened over time. Just about any age and type of foundation wall can have these sorts of problems and there are many reasons they can occur. Quality of materials, poor workmanship, and errors in design can all be contributors. These, however, are not the most common. Exterior soils are exposed to the elements, which constantly act to change the soil's moisture content, density, and volume. This is especially true for soils in the top several feet of the profile and those loose soils that are in direct contact with foundation walls, i.e., those soils located within the wall backfill zone. Constantly changing soil properties will take the lion's share of the blame when it comes to inward movement of foundation walls.

Weather cycles, irrigation, and landscaping can affect whether a soil exists in a dry or wet state and can cause clayey soils to shrink or swell, respectively. Roots from nearby trees can be deeper, larger and more expansive than many people realize and can act to either dehydrate foundation soil or press directly against basement walls. Northern climates also bring cycles of freeze and thaw. Water expands when it freezes so this can also be a contributor to the constantly changing soil forces.

These are all natural occurring phenomena that cause the soils and loads on the foundation wall to be in a constant state of change. Another critical concept to understand when it comes to foundation wall problems is something that foundation repair experts refer to as the "bathtub effect." A basement is a below ground structure, and when it is built, the first step during construction is to create a large excavation where the basement will be. After the foundation walls are built, the excavation is backfilled most often with the same soils that were originally removed. These soils are often purposefully placed in a loose state around the foundation walls to prevent damage that could occur from a compaction process. Because these backfill soils are less dense than the native soils that surround the original excavation, water will penetrate them much more easily. Less water will drain away from the house and more water saturates the backfill soils against the foundation walls. The accumulation of water adds lateral "hydrostatic" forces to the foundation. Drainage systems near the footing play an important role here since they reduce the build-up of hydrostatic pressure by diverting this water to a sump pit where it can then be pumped up and out of the "bathtub." However, residential new construction footing drainage systems are typically poorly designed and can quickly become clogged by the surrounding soils. Again, accumulating water causes hydrostatic forces to increase.

Something that exacerbates the bathtub effect is when the loose backfill soils consolidate. This lowers the elevation of the exterior grade immediately adjacent to the home preventing surface water from flowing away from the foundation wall. A lack of a gutter system, poorly placed downspouts, and poor surface grading are all contributors to the bathtub effect.

3.1.4 Options for Repair

There are several options that can be considered to remediate these issues that don't involve replacing the foundation wall(s). Selection of one option over another depends on the challenges and goals of a specific project. When considering these options, it's not only important to consider their applicability to the project, but also their functional differences since options for repair can typically be categorized as passive systems or active systems. Passive systems are intended to strengthen and hold the wall in place. Active systems, instead, will actively

© 2024 Supportworks®
All Rights Reserved

push back against the wall and therefore have the potential to recover some of the deflection that the wall has undergone. Passive systems can be quite effective but will never improve the position of the foundation wall.

A designer should also be aware that any of these options are intended to provide supplemental support to the existing structure. Evaluating the existing structural conditions and having a good understanding of any repair option are critical steps in designing an effective solution.

3.1.4.1 CarbonArmor® Wall Reinforcing System

The first option to be discussed here fits into the passive category. The CarbonArmor Wall Reinforcing System is a fiber-reinforced polymer (FRP) system that is applied to the inside face of the foundation wall. It's a thin material that has significant tension strength. It's bonded to, and therefore works together (or compositely) with the existing wall.

One way to understand how it functions would be to think of a stack of small wooden blocks. If you held the blocks in your hands, you'd find that you really wouldn't be able to apply any amount of bending force to the stack. Now if you were to apply a piece of strong tape to one side of the stack of blocks, then they would behave quite differently. In one direction, if you were to apply some bending force, the blocks would simply fan apart, but in the opposite direction, you would find that the stack would give you some resistance. The tape would be activated in tension on the side that is trying to pull apart, and the blocks would push against each other in compression on the opposing side (*Figure 3.3* and *Figure 3.4*). A foundation wall reinforced with CarbonArmor functions in much the same way. CarbonArmor stabilizes the existing wall by making it stronger.

Figure 3.3 Stack of wooden blocks fan apart when bending force is applied

Figure 3.4 CarbonArmor functions similar to a piece of tape on a stack of wooden blocks

3.1.4.2 PowerBrace™ Wall Bracing System

Our next option would usually be considered an active system, but only moderately so. The PowerBrace Wall Bracing System utilizes steel beams as backup support for the wall. Similar methods of repair will sometimes refer to the beams as strongbacks or soldier beams and could be made of wood or steel.

© 2024 Supportworks®
All Rights Reserved

As stated previously, most systems of this type that are commercially available would be considered moderately active, but that is not always the case. This type of system is also installed by handymen and do-it-yourself homeowners who simply place wood or steel beams against the wall and restrain them at the top and bottom. When this is done, it will behave entirely as a passive system. The system can only be considered active if the beam can be preloaded. This means that a beam will only push back on the wall when it has been forced away from its original shape. This would be analogous to a spring. A spring will only push back after it has been squeezed. Both the spring and the beam want to return to their original shape. If the beam is not preloaded and forced away from its original shape, then the beam will not push back on the wall until the wall undergoes additional inward movement.

The PowerBrace system is preloaded by first securing the bottom of the beam firmly against the wall by attaching it to the concrete floor slab. The top of the beam is then secured to the floor joists with a bracket and tightening bolt that forces the beam to push back against the wall.

A preloaded system like PowerBrace is still only considered moderately active since the force it can exert against the wall is somewhat limited compared to other options for repair. Additionally, any movement that would be recovered will improve the position of the wall, but would also bring the beam closer to its original (straight) shape. As the beam straightens, the beam will exert less force on the wall. It's therefore not common that PowerBrace beams will fully straighten a bowed wall, but they remain an effective solution for arresting further inward movement.

3.1.4.3 GeoLock® Wall Anchor System

The GeoLock Wall Anchor System utilizes the concept of a mechanism called a "dead man" anchor. There are, however, some unique benefits that GeoLock anchors bring that set it apart from its traditional predecessors. A dead man system gets its name by using an object buried in the ground to generate resistance to a tension force. The first types of dead man anchors utilized a buried log that was connected to a rope. Modern versions of dead man anchors use many other types of buried objects such as poured concrete blocks or steel plates, and attach to them with steel cables or rods.

A GeoLock anchor functions in a similar way. A steel anchor plate is placed in a small excavated hole away from the foundation wall. A steel rod is then driven from inside the building through a drilled hole in the foundation wall out to the excavation where it is attached to the anchor plate. A second plate is attached to the opposite end of the steel rod and tightened against the interior face of the foundation wall. At the same time, the buried anchor plate pulls against the soil which holds it in place. The location and depth of the buried anchor plate are important to a properly functioning system. The anchor plate needs to be far enough away from the wall so the soils used to hold the anchor plate in place are not the same soils that are pushing on the foundation wall.

When tightened, the interior wall plate will exert a great deal of force on the foundation wall. This makes GeoLock anchors the most active type of system of the repair options discussed. Since it is the most active system, it offers the greatest opportunity to recover the inward movement of the wall. This is done through periodic retightening of the system, which maintains the appropriate amount of force on the wall. In many circumstances, the position of the wall will improve over time. This will be discussed in more detail in the analysis section.

© 2024 Supportworks®
All Rights Reserved

3.1.5 Choosing the Right System

Selecting the appropriate system can sometimes be a simple matter of preference, but it can also be driven by several other factors. GeoLock anchors are often the first choice because they are such a highly active system. However, there are a few circumstances that would limit their applicability. GeoLock anchors are typically placed over 12 feet outside of the foundation wall. Potential anchor locations may be located in areas that have substantial tree roots, pavement, or other obstructions such as stoops or decks. In some areas, the soils surrounding the foundation may be laden with gravel and cobbles, which can make it difficult to drive the steel rod out to the buried anchor. Steep grades next to the home can increase the hole depth required to place the anchor plate and add difficulty to the installation. Some of these challenges can be overcome with additional labor and cost. The buried earth anchor should also not be placed beyond property lines. This can be a problem on many modern residential lots that have foundation wall setback requirements from the property line of only a few feet. Despite these challenges, GeoLock anchors are still the most commonly installed wall stabilization system.

PowerBrace beams can sometimes be the contractor's or homeowner's first choice, but are often treated as a fallback option to GeoLock anchors. This is because although they provide enough strength to stabilize the wall, they are not as active as the GeoLock option and therefore do not push back against the wall with nearly the same force. PowerBrace beams can also be difficult to install in some circumstances. The floor system above, as well as the foundation wall itself, carry all the utilities of the house including ductwork, plumbing, and electrical conduit. These utilities may cause interference with the beam or make the top connection to the floor joist system above very difficult. There are also certain types of floor joist systems that may be incompatible with the PowerBrace connection components. Highly specialized connections can sometimes work around some of these challenges, but they will drive up the project costs substantially.

CarbonArmor is next in our progression of most common repair options, but there are plenty of circumstances where it may be recommended as a first choice. Unfortunately, the majority of homeowners will ignore early signs of inward movement of their foundation walls. They may see the cracks develop, and then over periods of months or years they may watch the wall as it creeps inward a little bit at a time. They fear that foundation repair will be a substantial or unaffordable expense and this causes them to take a "wait and see" approach. By the time a foundation repair specialist is contacted, there is often significant movement and therefore, a more active system is preferred.

CarbonArmor falls third in this common progression mostly because it's an entirely passive system. It's an effective system and will strengthen the foundation wall, but it will simply hold the wall in its current position and this can be seen as a disadvantage. CarbonArmor can be the ideal choice when the wall is showing early signs of distress and the homeowner is proactive enough to identify these signs before things worsen. It also has the advantage of being considered the most visually attractive option. CarbonArmor has a very thin profile and after it is adhered to the wall, it can be painted over and practically vanish. CarbonArmor is a great repair option to have available.

Although this is the most common progression of preference, every home is unique. The installed system needs to be selected with consideration for what will integrate best with the existing structure and should also consider soil conditions, interior finishes, obstructions inside and outside the wall, property lines, utilities, and surrounding landscaping. There is no one-size-fits-all option in foundation repair.

© 2024 Supportworks®
All Rights Reserved

3.1.6 Design

Recommendations for the usage of one system over another or the recommended quantity of repair devices can vary widely from one designer to another. With a wide scatter of recommendations, it may appear that designers have misunderstandings about how these systems operate, but this is usually not the case. What usually separates one designer's recommendation from another is the way they have quantified the loads on the foundation wall, and the loads on the repair system.

To evaluate the lateral loads on the foundation wall, we need to understand a few things about soil. There are, of course, different types of soil that have different soil properties. These properties will affect the amount of lateral force that the soil will exert on the foundation wall. There are also different categories of soil loads for any given set of soil properties. The two that are most relevant to this discussion are the soil active pressure and the soil passive pressure.

When an excavation is created, soil does not have a natural tendency to stand up vertically. Its tendency is to move laterally and collapse. Some soils do this immediately, while others take quite some time, but all soils have this same tendency. When this soil movement is prevented (or held back) with a structure like a foundation wall, active pressure is what develops. It could be considered that active soil pressure is what develops when the soil is the aggressor. The highest level of active pressure for a given soil is called the at-rest pressure.

Conversely, when pressure is exerted upon the soil from another source, the soil then becomes the defender. This applied pressure tends to impose movement to the soil. The soil will resist this movement and will do so with the development of passive pressure, which is also called passive resistance. The amount of passive pressure that a soil can develop far exceeds the amount of active pressure that it can develop. The concept of passive pressure will be more important to understand in the *Straightening the Wall* section. For now, we will focus mostly on active and at-rest soil pressures.

In design, active and at-rest soil pressures are often approximated using a concept called equivalent fluid pressure. This concept is based on the fact that a fluid will exert increasing lateral pressure with depth. In a swimming pool, the water is exerting zero pressure on the pool walls at the surface. At the bottom of the pool, it exerts a great deal more pressure on the walls. At every depth between the surface and the bottom, the pressure will be proportionally different. The magnitude of the pressure on the pool wall basically looks like a triangular gradient. Active soil pressure is treated in a similar way using the concept of equivalent fluid pressure. The designer treats the soil as if it were a fluid. The assumed equivalent fluid is assigned a density called the equivalent fluid weight which will vary depending on the properties of the soil. Equivalent fluid pressure could therefore more accurately be referred to as the pressure resulting from an assumed equivalent fluid weight. Engineers use the term equivalent fluid pressure (EFP) as somewhat of an abbreviation. The three most common values of equivalent fluid pressure used in the design of residential foundation walls are 30, 45, and 60 pounds per cubic foot (psf/ft). These are the values for the standardized soil types listed in the applicable construction tables of the International Residential Code (IRC).

What we've just described are the active and at-rest soil pressures on the foundation wall. Most designers will use the concept of equivalent fluid pressure in their design although there may be some disagreement on the magnitude of the equivalent fluid pressure that is appropriate to be used for remediation of existing foundation walls. It certainly makes some sense to assume an equivalent fluid pressure that is greater than what was likely used in the original wall design. The wall would likely not be showing signs of distress unless the magnitude of the forces on the wall were originally

© 2024 Supportworks®
All Rights Reserved

underestimated. For this reason, some designers will utilize equivalent fluid pressures that exceed the values recommended in the IRC when designing a solution for a failing foundation wall. A more significant difference, however, that separates one designer from another, is how they assume these forces act on the foundation repair systems.

Evaluating and quantifying the active and at-rest soil pressures on the wall is only the first step in developing an appropriate solution. It's also important that the designer understand that the actual loads on the foundation repair system will also be driven by factors such as the method of construction that was used to build the wall, and what the deflected shape of the existing wall is. In the *Evidence of Distress* section, we discussed how different types of foundation walls have different weak points and different modes of failure. The wall will tend to draw support from the foundation repair system in locations where the wall is weakest. A failing (leaning) poured concrete wall and a failing (bowing) CMU wall that have similar soil pressure on them will put different demands on the foundation support system. The foundation wall is receiving supplemental support, but it still has strength that it is contributing to the resistance of these lateral forces.

3.1.6.1 Design with GeoLock® Wall Anchors

When using GeoLock anchors, a designer often performs an analysis for the purposes of determining the reaction that is provided by the anchors. This is a useful step, but there are a few items that should be kept in mind as the designer progresses through this part of the analysis.

First, the resulting calculated reaction is not really a reaction, and doesn't reflect the load in the anchors at all. The anchors are tightened to a specific torque, which equates to a specific tension in the anchor rod. This means the actual load in the anchor is already known. The anchor will behave like an applied force instead of a calculated reaction.

This calculated "reaction" becomes useful because it gives us a conservative estimate of the amount of load that is necessary to stabilize the wall. If the actual load in the anchors, which is known, is greater than the demand on the anchors determined through analysis, then the designer should feel comfortable that the anchors will leave the wall in a stable condition. Using typical spacing guidelines based on wall strength considerations, the actual load in the anchor often exceeds the calculated demand by a significant margin, which is why GeoLock anchors were previously described as a highly active system that offers the greatest opportunity to straighten the wall over time.

The second thing that the designer should keep in mind when calculating the demand in the anchors is that the wall type and the mode of failure will play a role. Recall that a CMU wall typically has a long horizontal crack along the interior face of the wall. The anchors are typically placed at an elevation just below this crack. If the designer considers the wall to have bending continuity over the row of anchors, then he likely will calculate that the anchored wall will have negative bending at the elevation of the anchors. This is not true. Negative bending would require that the exterior face of the wall be in tension and the interior face of the wall be in compression. We already know that there is a long, horizontal crack at this location. The interior face cannot resist compression until this crack closes. In reality, the wall will remain in a state of positive bending even after the anchors are installed. In the analysis, it would therefore be conservative to treat the wall as two separate bending elements that are simply supported and pinned at the row of anchors (*Figure 3.5*). The bending force at the crack is assumed to be zero. This actually simplifies the analysis by making it statically determinate. The analysis is more representative of actual loading and resistance conditions but still offers a level of conservatism.

© 2024 Supportworks®
All Rights Reserved

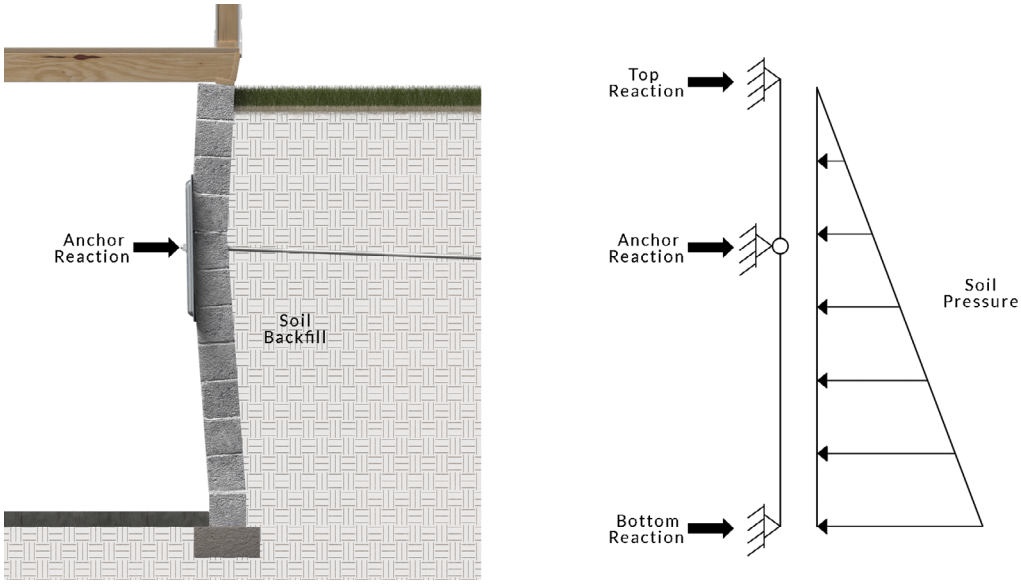

Figure 3.5 Modeling a CMU wall as a hinge at the elevation of the horizontal crack results in an analysis that is both statically determinate and more representative of actual loading conditions

A poured concrete wall may have the same height and the same amount of soil pressure on it, but it is often showing a different mode of failure and has a different deflected shape. The wall is still intact and will still have its full bending strength at the row of anchors. Recall that the common mode of failure for this type of wall is for it to lose support at the sill plate at the top. In this analysis, it's appropriate to model the wall as being supported at the bottom and at the row of anchors. The wall has bending continuity at the row of anchors and the upper portion of the wall is treated as a cantilever that is unsupported at the top (*Figure 3.6*). The load from the structure above will generate friction that provides some support to the top of the wall but this resistance is neglected and again we are left with a statically determinate analysis that is more representative of actual conditions.

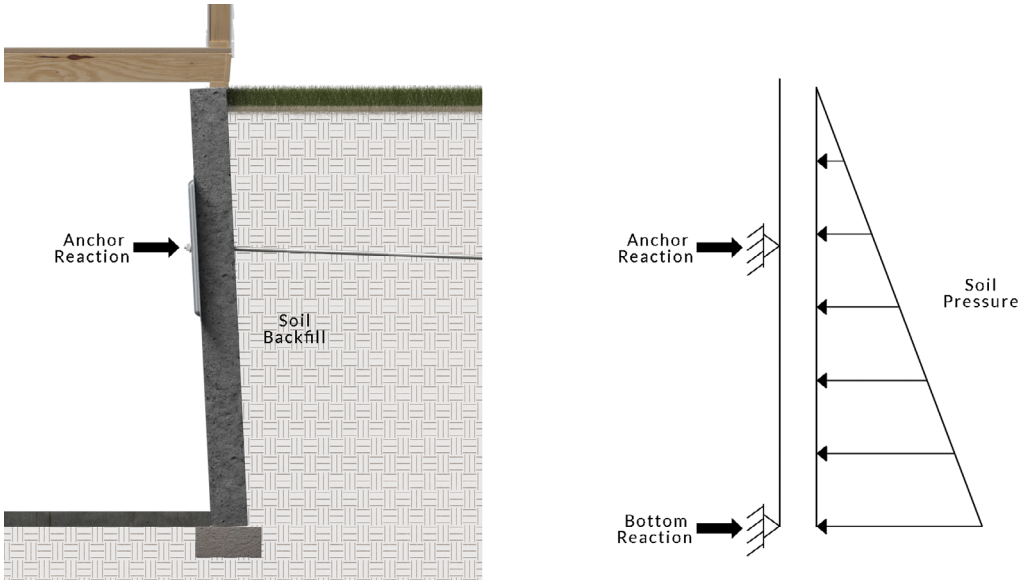

Figure 3.6 Modeling a poured concrete wall as a cantilever and neglecting any contribution of friction at the top of the wall also results in a statically determinate analysis

© 2024 Supportworks®
All Rights Reserved

We've mentioned that there can be substantial disagreement from one designer to another in their recommendations for foundation repair. This is especially true with steel beam systems like PowerBrace Wall Braces. This disagreement will often originate from assumptions made by designers in how lateral soil loads on the wall are translated into loads on the PowerBrace beams. A common assumption would be to calculate design forces on the beams as if the existing wall carries none of the soil loads. All of the active and at-rest soil pressures are considered to pass directly through the wall to the beams without any modification or redistribution. This common assumption is only appropriate for entirely passive systems such as CarbonArmor. For an active system like PowerBrace, these types of assumptions are unnecessarily conservative and inaccurate, which leads to inappropriate repair recommendations.

More specifically, this type of analysis will model the load on the beam as a triangular gradient generated from the active or at-rest soil pressure. It is appropriate to model the soil loads on the wall in this fashion, but after these loads find their way through the wall, the loads on the beam will be completely different. The actual loads on the beams will have more to do with the deflected shape of the wall. The active or at-rest soil pressure is the mechanism that gave the wall its deflected shape, but regardless of how the wall arrived at its position, the load on the beam will be driven from the wall geometry instead of the wall loads.

Consider the CMU wall example that was discussed in the previous section. There it was shown how a designer could calculate the demand on a row of anchors placed just below the elevation of the horizontal crack. There is really no reason that the designer should treat the PowerBrace beams any differently. The wall requires a certain amount of force to be applied at the elevation of the crack in order to provide stability. This force can be supplied with a GeoLock anchor and it can also be supplied with a PowerBrace beam. The stabilization force on the beam will naturally migrate toward the elevation of the crack since that is the point of maximum deflection. The beam behaves as a simply supported beam with a point load at the point of maximum inward movement (*Figure 3.7*). If the designer instead assumes a pass-through transfer of the soil active pressure, then the calculated bending demand on the beam and the calculated demand on the lower connection between the beam and the floor slab will far exceed the actual, installed forces on the system. This results in a level of conservatism that is excessive and more importantly, it's not representative of the resulting actual load paths on the installed system.

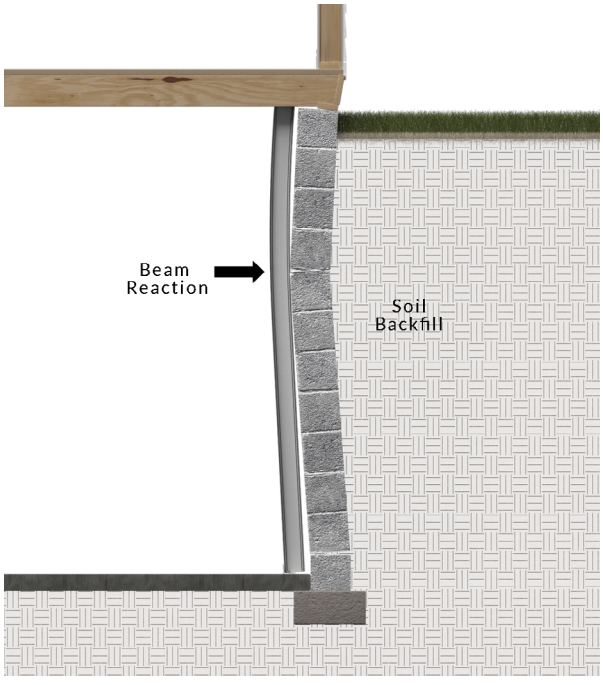

Figure 3.7 On a bowing CMU wall, the reaction between the beam and the wall will migrate to the point of maximum inward movement at the horizontal crack

This misrepresentative analysis is even further from reality when beams are installed on a poured concrete wall since it would model the forces on the beam the same way it did for a CMU wall. In this case, since the wall is straight, the stabilizing force on the beam will migrate to the top of the wall. The beam again behaves

© 2024 Supportworks®
All Rights Reserved

as a simply supported beam with a point load, but now the point load is located at the top of the wall which is very close to the beam's top bracket connection (*Figure 3.8*). The actual, in-place bending demand on the beam and the demand on the lower connection to the floor slab are actually very low. Almost all of the actual demand on the system needs to be met by the shear strength of the top few inches of the beam and the connection strength at the top of the beam.

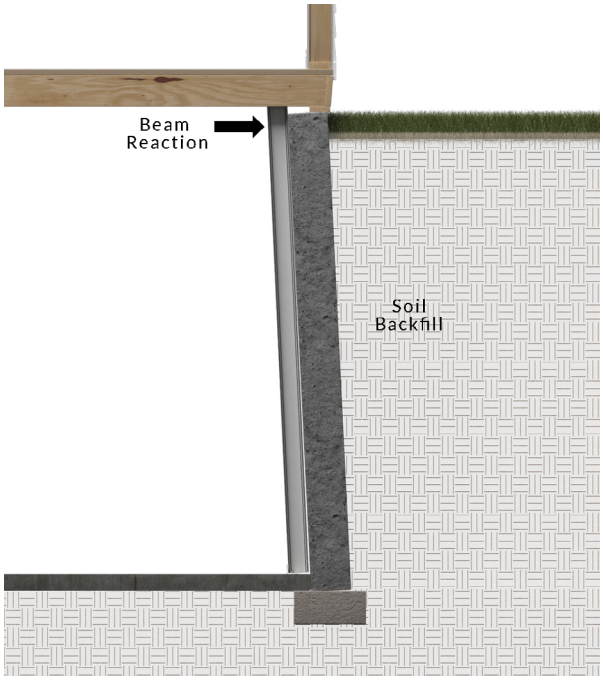

Figure 3.8 On a leaning poured concrete wall, the reaction between the beam and the wall will migrate to the point of maximum inward movement at the top of the wall

Another often misunderstood part of the evaluation is the way the designer approaches how beam deflection should be considered. A designer will sometimes feel the need to check the estimated beam deflection against some common serviceability limits, as they would when designing a new structure. It's important to keep in mind that we are dealing with an existing structure that is likely already outside these serviceability limits. The stabilizing beams really should not be subject to serviceability limits. The designer probably only needs to consider deflection insofar as to make sure that the shape of the wall is sufficient to mobilize the required stabilizing force once the beam is loaded. This likely only comes into play for a bowing CMU wall with a long horizontal crack. A designer can calculate the required stabilizing force using the methods recommended above, and can then estimate the beam deflection when loaded with the required stabilizing force. As long as the wall has inward movement that is in excess of the estimated beam deflection, then the beam will be able to generate the required stabilizing force. Although there are lots of combinations to consider, for most walls nine feet tall and less, a horizontal crack that is between ¼ and ½ inch out of plumb will allow the beam to achieve the appropriate deflected shape to meet the stabilization demands of the wall. If the wall has less deflection than that, then PowerBrace beams will behave more like a passive system. The beams can still stabilize the wall, but because they are acting more like a passive system, then some additional movement of the wall may occur after beam installation. This additional movement may continue until the wall reaches a deflected shape that generates a reaction in the beam that brings the loads and reactions into equilibrium. PowerBrace beams may not be the best solution in this type of circumstance. A wall that is so close to its original plumb position may be better suited to be stabilized with a passive system like CarbonArmor.

© 2024 Supportworks®
All Rights Reserved

3.1.7 Straightening the Wall

When a homeowner is interested in stabilizing the inward movement of their foundation wall, they will often be interested to know if the installed system will improve the wall's position. Partial or significant recovery of inward movement actually happens often, even without excavation of the backfill soils. To explain why this happens, it's necessary to get back to the discussion about soil pressures that began in the *Design* section.

In that section, it was explained how the concept of equivalent fluid pressure can be used to estimate the design forces required to stabilize a distressed foundation wall. It was also explained that a highly active system like GeoLock anchors will supply a force to the wall that is often far in excess of the calculated reaction necessary to stabilize the wall. Applying this additional force gives the wall a tendency to move back toward a plumb position. That doesn't mean that this will happen immediately. It only means that the wall will now have this tendency. It also means, however, that since the wall is tending to move toward the backfill soils, that the pressure between the soil and the wall will also be affected. Prior to the installation of the anchors, the soil is considered the aggressor that is exerting its active or at-rest pressure on the wall. When the anchors are tightened, the soil then becomes the defender that is resisting the movement of the wall. This engages the soil's passive pressure (or passive resistance) to hold the soil in its current position and prevent the wall from pushing the soil out of the way. The amount of passive pressure that a soil can generate is significantly higher than the amount of active pressure it can generate. Some soil types can have passive pressures that are six to ten times greater than their active pressures. The more the anchor rods are tightened, the more passive resistance of the soil is mobilized.

Passive pressure is also what allows the earth anchor plate to be held in place. Since passive pressure develops against both the earth anchor and the wall when the system is tightened, straightening of the wall would then not seem possible. The wall has a great deal more contact area with the soil than the buried earth anchor plate. Mathematically, as the anchor rod is tightened and the wall and the earth anchor pull against each other, the earth anchor (the smaller object) should pull through the soil before the wall (the larger object) moves closer to a plumb position. The simple fact is that straightening of the wall is a common occurrence when the anchors are tightened to the recommended torque and at the recommended schedule. This is a measurable effect, so how is this possible?

The answer is not as complicated as one might think. Structures with below ground basements are typically constructed in areas where clay soils are present near the surface. Clay soils have cohesive properties as well as the potential for volume changes with variations in moisture levels. This means that during dry periods, the soils can shrink away from the foundation wall. The cohesive properties in the soil allow it to stand on its own and create thin spaces between the soil and the foundation wall. The tension on installed anchor rods then decreases. This creates an opportunity to tighten the anchors and take advantage of the gaps that have formed between the foundation wall and soil. This moves the wall slightly closer to a plumb position. This cycle can be repeated until the desired result is achieved. This also explains why some walls will see better results than others. If the soil surrounding the home has higher silt or sand content, it will generally not have the same cohesion and shrink-swell potential as a purely clayey soil. That means that even during dry periods, the less cohesive soil may not relieve the pressure on the anchors. Although wall anchor systems are still effective in arresting further appreciable movement in these types of soils, the likelihood that the position of the wall will improve is reduced.

© 2024 Supportworks®
All Rights Reserved

The most important functional consideration for active systems such as GeoLock anchors and PowerBrace beams is to provide steady, constant pressure to the wall during the wall straightening process. System requirements for stabilizing a wall and arresting further movement can be determined by approximating equivalent fluid pressures and calculating forces as discussed earlier in this chapter. Straightening of the wall, on the other hand, is not so much a mathematical endeavor. The probability that the wall position will improve is based more on experience and understanding. One can never say with great certainty whether or not a given wall's position will improve. It's only possible to understand how it's achieved and know the circumstances that make it favorable:

- Wall straightening is more likely if backfill soils consist of more cohesive material such as clay. As concentrations of silt and sand increase, likelihood of improving the wall position is reduced.
- Bowing walls are more likely to straighten than leaning walls.
- Walls with exterior grades that slope and drain away from the structure are more likely to straighten than those that don't.
- Wall straightening is more likely during dry periods and with less frequent irrigation.
- Highly active systems such as GeoLock anchors are more likely to completely straighten a wall than moderately active systems like PowerBrace beams.

3.1.8 Solutions for Extreme Wall Problems

An owner may wish to have a basement wall or retaining wall straightened immediately, rather than follow the periodic tightening procedure. The soil behind the wall must then be completely removed down to the footing. With the soil load temporarily removed, the wall can be straightened. After straightening, any of the systems described in this chapter may be used to stabilize the wall and hold it in place. GeoLock anchors are often preferred in these circumstances since the anchor rods can be used as the primary mechanism to straighten the wall. If another repair option is used, the contractor will manipulate the position of the wall by some other means before installing the chosen repair solution to stabilize the wall against future inward movement (*Figure 3.9* and *Figure 3.10*).

Figure 3.9 Before: Poured concrete basement wall severely leaning in at the top

Figure 3.10 After: Wall is immediately returned to original straight position after backfill soil is removed and GeoLock anchors installed

© 2024 Supportworks®
All Rights Reserved

Block walls in later stages of distress may show inward shear movement at the bottom of the wall. The bottom row of the block wall is restrained by the basement floor slab while the wall section above continues to deflect inward. The movement at the mortar joint between the first and second courses of block is often obvious and measurable. In order to recover this movement and straighten the wall, the backfill soil must again be completely excavated down to the footing. The base of the wall is pushed back and GeoLock wall anchors are installed (*Figure 3.11* and *Figure 3.12*). In circumstances such as these, the interior wall plate of the GeoLock system is often replaced with a steel channel connected to the anchor rod and secured to the concrete floor (*Figure 3.13*).

Figure 3.11 Before: Shear movement of a block wall evident from exterior

Figure 3.12 After: Shear movement recovered and wall stabilized with GeoLock anchors

Figure 3.13 GeoLock channel anchor system installed to prevent shear movement

© 2024 Supportworks®
All Rights Reserved

3.1.8.1 Wall Deflection Guidelines

A foundation wall experiencing inward movement may eventually get to a stage where stabilization without removal of the backfill soil is no longer an option. When does the designer or contractor consider immediate straightening of the wall, removal and replacement, or other less common options? Opinions will vary between design professionals and even contractors performing this work. Designers and contractors that specialize in this work and perform these repairs almost daily are more likely to offer warrantied solutions on foundation walls that others feel are too far gone. Other designers and contractors may be more risk adverse and only consider options they are most confident with. That said, the following guidelines are offered to assist design professionals and contractors in evaluating wall conditions and determining the applicability of systems discussed in this chapter. Again, designers and contractors may choose limits higher or lower than these values.

The GeoLock Wall Anchor System and the PowerBrace Wall Bracing System have been used effectively to stabilize (and potentially straighten) foundation walls when:

- Inward deflection at the top of the wall is 4 inches or less;
- Inward deflection at the mid-height of the wall is 3 inches or less, and
- Shearing at the bottom of a block wall is ½ inch or less.

The Carbon Armor Wall Reinforcing System is most often used to stabilize bowing CMU block walls when the wall's maximum inward deflection is 2 inches or less. CarbonArmor straps should not be used to resist shear at the bottom of a block wall. CarbonArmor with the optional ArmorLock system may be considered as supplemental support to the wall's top connection to the sill plate. If the top of wall connection to the sill plate has failed completely, then other options should be considered.

© 2024 Supportworks®
All Rights Reserved

3.2 GeoLock® Wall Anchor System

3.2.1 Summary Description

The GeoLock Wall Anchor System designed and manufactured by Foundation Supportworks is a proven method to laterally support bowed, leaning and sheared foundation walls and retaining walls subject to unbalanced earth pressures. Similar-type "plate anchor" systems have been used successfully since the late 1970s to stabilize foundation walls and retaining walls against further appreciable lateral movement. The system consists of an earth anchor buried in the ground an adequate distance from the structure, an interior wall plate set against the wall face being supported, and an anchor rod to connect the two (*Figure 3.14*). The passive resistance of the soil in front of the earth anchor resists lateral forces on the wall and further inward movement. Technical specifications for the GeoLock Wall Anchor System are included in *Appendix 3A*.

3.2.1.1 Advantages

Some of the advantages to installing GeoLock wall anchors over other wall bracing systems may include:

- Can be installed year-round
- Most jobs completed in one day
- Minimal disturbance to home, lawn and landscaping
- Can straighten walls over time (in many cases)
- Will not damage interior flooring
- Easily hidden within framing of walls

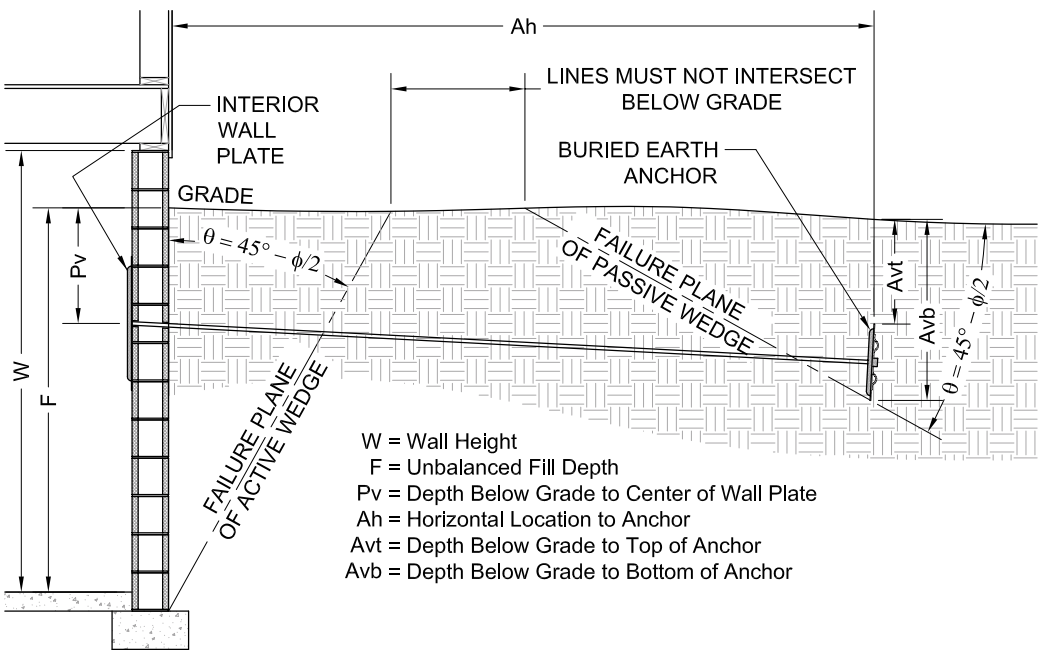

Figure 3.14 General arrangement of GeoLock® Wall Anchor System

© 2024 Supportworks®
All Rights Reserved

3.2.2 Installation Guidelines

In the following subsections, we offer general installation guidelines for spacing, tightening, and depth and location of the earth anchor. Literally thousands of basement walls have been stabilized with these guidelines and with great results. Deviations to these guidelines may be considered by a qualified design professional based on project-specific conditions.

3.2.2.1 Spacing

The designer will consider several factors when providing recommendations for anchor spacing. These factors include the wall height and thickness, the retained height of the backfill, and the general condition and position of the wall. One of the most common situations is for an 8-inch-thick concrete block residential basement wall that is 8 feet tall with 8 feet of unbalanced fill. This scenario most commonly results in a spacing recommendation of 5 feet between anchors and 3 feet from corners. Another common situation would be for an 8-inch-thick poured concrete residential basement wall that is also 9 feet tall with 8 feet of unbalanced fill. This scenario most commonly results in a spacing recommendation of 6 feet between anchors and 3.5 feet from corners.

3.2.2.2 Torque Recommendations

Torque applied to the nuts during the tightening process of the wall anchor system correlates directly to tension in the anchor rod and force applied to the wall. Foundation Supportworks engineering recommends that applied torque not exceed 80 foot-pounds (ft-lb) for block walls and 90 ft-lb for poured concrete walls. These torque values assume that Foundation Supportworks Anchor Wax is applied to the threads on the rod, which significantly reduces friction between the rod and nut and results in a higher applied force than nuts tightened to similar torque in a dry condition. The average applied force noted in *Figure 3.15* was generated from dozens of test samples with testing completed at an independent test facility. Due to product variations, these values should only be considered applicable to products supplied by Foundation Supportworks.

Applied Torque (ft-lb)	Average Applied Force (lb)	
	Waxed Condition	Dry Condition
80	11,900	6,100
90	12,900	6,900

Figure 3.15 Average applied force on the anchor rod versus applied torque on the anchor rod nut

The GeoLock system utilizes a hemispherical washer which allows the thread rod to be installed at angles up to 10 degrees in any direction. The adjustable washer prevents edge-loading of the nut and bending of the all thread rod, and allows for a more accurate torque reading during the tightening process *(Figure 3.16)*. Installers shall closely monitor the tightening process of the wall anchor installation and reduce the applied torque as necessary for atypical conditions.

Figure 3.16 Hemispherical washer

© 2024 Supportworks®
All Rights Reserved

The GeoLock Wall Anchor System is designed with two (2) ¾-inch diameter, 80-inch long all-thread rods coupled together. This total rod length of 13 feet 4 inches allows the earth anchor to be approximately 12 feet from the stabilized wall, far enough to prevent load from the anchor being transferred back to the wall. Considering the backfill height, the vertical placement of the earth anchor, and a range of soil types and strengths, the coupled rod length of 13 feet 4 inches would be adequate for typical applications with backfill heights up to about 8 feet. Additional all-thread rod sections can easily be added as necessary for backfill heights greater than 8 feet.

The following tables provide the horizontal location of the earth anchor from the exterior face of the foundation wall (Ah) and the earth anchor depths (Avt and Avb) considering a variety of soil conditions. Refer to *Figure 3.14* when using these tables. One quickly observes that soil type has little effect and changes Ah and Avb only slightly. Rather, values of Ah and Avb are driven more by minimum depth criteria and geometry. The anchor plate should also be buried deep enough to be below the depth of soil affected by frost, and below any "active zone," i.e., the depth of clayey soils that may shrink or swell with seasonal moisture variations.

Soil Description: Medium Dense Sand and Gravel

Internal angle of friction (Φ) = 34 degrees

"Ah" Minimum Required Horizontal Location to Anchor (ft)											
"Pv" Depth Below Grade to Center of Wall Plate (ft)		1		2		3		4		5	
		Anchor Size		Anchor Size		Anchor Size		Anchor Size		Anchor Size	
		Small	Med/Lrg	Small	Med/Lrg	Small	Med/Lrg	Small	Med/Lrg	Small	Med/Lrg
"F" Unbalanced Fill Depth (ft)	**10**	12.2	13.0	12.2	13.0	13.0	13.8	14.9	15.7	16.8	17.5
	9	11.7	12.5	11.7	12.5	12.5	13.2	14.4	15.1		
	8	11.2	11.9	11.2	11.9	11.9	12.7	13.8	14.6		
	7	10.6	11.4	10.6	11.4	11.4	12.2				
	6	10.1	10.9	10.1	10.9	10.9	11.7				
	5	9.6	10.3	9.6	10.3						
	4	9.0	9.8	9.0	9.8						
	3	8.5	9.3								

"Avb & Avt" Minimum Required Depths Below Grade to Anchor (ft)										
Bottom - Avb:	3.7	4.1	3.7	4.1	4.1	4.5	5.1	5.5	6.1	6.5
Top - Avt:	Depth as needed to prevent frost effects									

© 2024 Supportworks®
All Rights Reserved

Soil Description: Loose Sand and Gravel

Internal angle of friction (Φ) = 30 degrees

"Ah" Minimum Required Horizontal Location to Anchor (ft)											
"Pv" Depth Below Grade to Center of Wall Plate (ft)		1		2		3		4		5	
		Anchor Size		Anchor Size		Anchor Size		Anchor Size		Anchor Size	
		Small	Med/Lrg	Small	Med/Lrg	Small	Med/Lrg	Small	Med/Lrg	Small	Med/Lrg
"F" Unbalanced Fill Depth (ft)	10	12.1	12.8	12.1	12.8	12.9	13.6	14.6	15.3	16.3	17.0
	9	11.6	12.3	11.6	12.3	12.3	13.0	14.0	14.7		
	8	11.0	11.7	11.0	11.7	11.7	12.4	13.4	14.1		
	7	10.4	11.1	10.4	11.1	11.1	11.8				
	6	9.8	10.5	9.8	10.5	10.5	11.3				
	5	9.2	10.0	9.2	10.0						
	4	8.7	9.4	8.7	9.4						
	3	8.1	8.8								

"Avb & Avt" Minimum Required Depths Below Grade to Anchor (ft)										
Bottom - Avb:	3.7	4.1	3.7	4.1	4.1	4.5	5.1	5.5	6.1	6.5
Top - Avt:	Depth as needed to prevent frost effects									

Soil Description: Silt, Silty/Clayey Sand and Gravel

Internal angle of friction (Φ) = 26 degrees

"Ah" Minimum Required Horizontal Location to Anchor (ft)											
"Pv" Depth Below Grade to Center of Wall Plate (ft)		1		2		3		4		5	
		Anchor Size		Anchor Size		Anchor Size		Anchor Size		Anchor Size	
		Small	Med/Lrg	Small	Med/Lrg	Small	Med/Lrg	Small	Med/Lrg	Small	Med/Lrg
"F" Unbalanced Fill Depth (ft)	10	12.1	12.8	12.1	12.8	12.8	13.5	14.4	15.1	16.0	16.7
	9	11.5	12.2	11.5	12.2	12.2	12.8	13.8	14.4		
	8	10.9	11.5	10.9	11.5	11.5	12.2	13.1	13.8		
	7	10.2	10.9	10.2	10.9	10.9	11.6				
	6	9.6	10.3	9.6	10.3	10.3	11.0				
	5	9.0	9.7	9.0	9.7						
	4	8.4	9.0	8.4	9.0						
	3	7.7	8.4								

"Avb & Avt" Minimum Required Depths Below Grade to Anchor (ft)										
Bottom - Avb:	3.7	4.1	3.7	4.1	4.1	4.5	5.1	5.5	6.1	6.5
Top - Avt:	Depth as needed to prevent frost effects									

© 2024 Supportworks®
All Rights Reserved

Soil Description: Silty Clay, Clay with Sand

Internal angle of friction (Φ) = 18 degrees

"Ah" Minimum Required Horizontal Location to Anchor (ft)											
"Pv" Depth Below Grade to Center of Wall Plate (ft)		1		2		3		4		5	
		Anchor Size		Anchor Size		Anchor Size		Anchor Size		Anchor Size	
		Small	Med/Lrg	Small	Med/Lrg	Small	Med/Lrg	Small	Med/Lrg	Small	Med/Lrg
"F" Unbalanced Fill Depth (ft)	10	12.3	12.9	12.3	12.9	12.9	13.5	14.3	14.8	15.6	16.2
	9	11.6	12.2	11.6	12.2	12.2	12.7	13.5	14.1		
	8	10.9	11.4	10.9	11.4	11.4	12.0	12.8	13.4		
	7	10.1	10.7	10.1	10.7	10.7	11.3				
	6	9.4	10.0	9.4	10.0	10.0	10.6				
	5	8.7	9.2	8.7	9.2						
	4	8.0	8.5	8.0	8.5						
	3	7.2	7.8								

"Avb & Avt" Minimum Required Depths Below Grade to Anchor (ft)										
Bottom - Avb:	3.7	4.1	3.7	4.1	4.1	4.5	5.1	5.5	6.1	6.5
Top - Avt:	Depth as needed to prevent frost effects									

Soil Description: Saturated Clay Soils

Internal angle of friction (Φ) = 0 degrees

"Ah" Minimum Required Horizontal Location to Anchor (ft)											
"Pv" Depth Below Grade to Center of Wall Plate (ft)		1		2		3		4		5	
		Anchor Size		Anchor Size		Anchor Size		Anchor Size		Anchor Size	
		Small	Med/Lrg	Small	Med/Lrg	Small	Med/Lrg	Small	Med/Lrg	Small	Med/Lrg
"F" Unbalanced Fill Depth (ft)	10	13.7	14.1	13.7	14.1	14.1	14.7	15.1	15.5	16.1	16.5
	9	12.7	13.1	12.7	13.1	13.1	13.7	14.1	14.5		
	8	11.7	12.1	11.7	12.1	12.1	12.7	13.1	13.5		
	7	10.7	11.1	10.7	11.1	11.1	11.7				
	6	9.7	10.1	9.7	10.1	10.1	10.7				
	5	8.7	9.1	8.7	9.1						
	4	7.7	8.1	7.7	8.1						
	3	6.7	7.1								

"Avb & Avt" Minimum Required Depths Below Grade to Anchor (ft)										
Bottom - Avb:	3.7	4.1	3.7	4.1	4.1	4.5	5.1	5.5	6.1	6.5
Top - Avt:	Depth as needed to prevent frost effects									

© 2024 Supportworks®
All Rights Reserved

3.2.3 Installation Steps

The following steps provide a broad overview of a typical GeoLock Wall Anchor System installation. Intermediate steps, installation equipment and tools used, and considerations for unusual conditions or applications are not addressed.

Step 1

Sod is carefully removed and a hole is excavated or augered (*Figure 3.17*). The front face of the hole (toward structure) is cut flat to accept the earth anchor plate.

Figure 3.17

Step 2

A small 1⅛-inch hole is drilled through the basement wall and the anchor rod is driven out to penetrate the augered hole (*Figure 3.18*).

Figure 3.18

Step 3

Earth anchor plate is placed in the augered hole and attached to the anchor rod (*Figure 3.19*).

Figure 3.19

© 2024 Supportworks®
All Rights Reserved

Step 4

Interior wall plate is positioned over the anchor rod and tightened to the specified torque, seating the earth anchor plate and engaging the passive resistance of the soils (*Figure 3.20*).

Figure 3.20

Step 5

Augered hole is backfilled and compacted and the sod is replaced (*Figure 3.21*).

Figure 3.21

Step 6

Anchors can be tightened at specified intervals to straighten wall over time, if desired (*Figure 3.22*). Tightening of the anchors generally occurs during drier seasons of the year when there is less pressure on the wall and shrinkage gaps may have formed between the wall and the soil.

Figure 3.22

© 2024 Supportworks®
All Rights Reserved

3.3 PowerBrace™ Wall Bracing System

3.3.1 Summary Description

The PowerBrace™ Wall Bracing System is designed to laterally support bowed, leaning and sheared foundation walls. The system has been used with thousands of successful installations throughout the United States and Canada. The PowerBrace system is a patented system that, when installed properly, will not only stabilize foundation walls against further appreciable lateral movement, but also has the potential to improve the wall's position over time. A steel beam is positioned against the foundation wall and braced at the top and bottom with brackets. The bottom angle bracket is anchored to the concrete floor. An adjustable top bracket is connected to the joists supporting the floor system above (*Figure 3.23* and *Figure 3.24*). Technical specifications and spacing guidelines for the PowerBrace system can be found in *Appendix 3B*.

Figure 3.23 PowerBrace installation with joists perpendicular to wall

Figure 3.24 PowerBrace installation with joists parallel to wall

© 2024 Supportworks®
All Rights Reserved

3.3.2 Installation Steps

The following steps provide a broad overview for typical PowerBrace installations. Intermediate steps, installation equipment and tools used, considerations for obstructions along the wall, and considerations for variable joist details are not addressed. It is critical that adequate blocking be installed along and between floor joists supporting the first floor so loads are adequately and effectively transferred into the floor system without damage.

Step 1

Measure the height of the wall and the depth of the floor joist system at the location where the PowerBrace system will be installed. Cut the PowerBrace beam to the appropriate length (*Figure 3.25*).

Figure 3.25

Step 2

The bottom bracket is positioned at the bottom of the beam and anchored to the concrete floor (*Figure 3.26*). The bottom of the beam is typically set to be in contact with the wall.

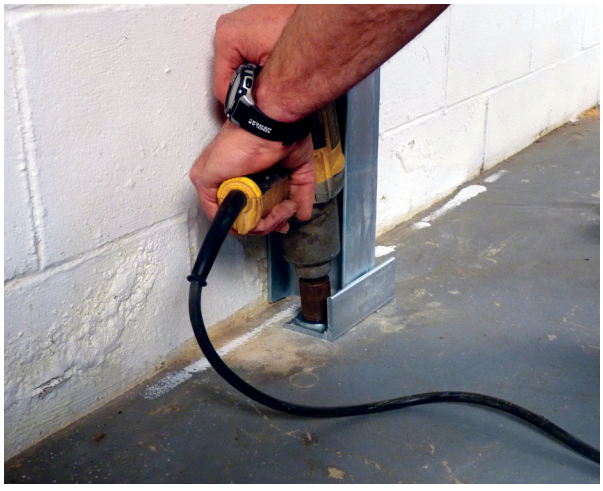

Figure 3.26

Step 3

PowerBrace beam is plumbed (side to side) in the plane of the wall. The top of the beam will be leaning toward the interior of the basement. (*Figure 3.27*).

Figure 3.27

© 2024 Supportworks®
All Rights Reserved

Step 4a: Joists Perpendicular to Wall

The telescoping top "bridge" bracket assembly is adjusted to the appropriate length and attached to the floor joists. The top of the beam is then captured by the tightening bolt and bent plate extending from the bracket (*Figure 3.28*).

Figure 3.28

Step 4b: Joists Parallel to Wall

Wood blocking, the steel strap runner, and the top "lever" bracket are attached to the floor joists. The top of the beam is then captured by the tightening bolt and bent plate extending from the bracket (*Figure 3.29*).

Figure 3.29

Step 5

The PowerBrace system can be tightened over time for possible wall improvement (*Figure 3.30*).

Figure 3.30

© 2024 Supportworks®
All Rights Reserved

3.4 CarbonArmor® Wall Reinforcing System

3.4.1 Summary Description

Foundation Supportworks offers high-strength fiber-reinforced polymer (FRP) composite materials to reinforce concrete block and poured concrete foundation walls. These systems effectively combine the benefits of epoxies and carbon fibers to provide high strength, low strain tensile reinforcement. When properly installed and bonded to concrete substrates, like basement walls, significant improvements to both structural integrity and load capacity can be achieved (*Figure 3.31*).

The design strength of the CarbonArmor system is supported by extensive application and durability testing. The CarbonArmor Wall Reinforcing System is a proven method to laterally support bowing foundation walls. Technical specifications and spacing recommendations are included in *Appendix 3C*.

Figure 3.31 Rendering of CarbonArmor installation with optional ArmorLock connection to rim joist and sill plate

3.4.1.1 Advantages

- Ideal to reinforce the inside face of block walls to prevent further bowing
- Optional ArmorLock® system resists movement at the top of the wall
- Flexible carbon fiber fabric contours tight against the wall
- May be installed around obstructions on the wall; such as piping, electric conduit, and HVAC ductwork
- Completed and cured installations are suitable for painting
- Low profile system can be concealed by wall framing

© 2024 Supportworks®
All Rights Reserved

3.4.2 Installation Steps

Step 1

Prepare the wall surface about eight inches wide for each CarbonArmor strap. Concrete surfaces must be structurally sound and free from contaminants such as dust, dirt, or oil. Use the vertical mortar joints of block walls as guides. Surfaces must be mechanically abraded to remove paint, expose a fresh, roughened surface of the block or concrete, and to remove protrusions from the wall that may trap air behind the installed CarbonArmor strap (*Figure 3.32*). At locations that will receive an ArmorLock installation, grind the top edge of the wall to create a smooth, rounded corner (*Figure 3.33*). After abrading, thoroughly clean the wall with a vacuum and place confinement tape along edges of the prepared areas.

Figure 3.32

Figure 3.33

Step 2

To establish a continuous, flat bond of fabric to the wall, thoroughly mix the two-part epoxy paste and fill all mortar joints and cracks at the strap locations. All mortar joints and cracks located behind the fabric should be filled flush with the face of the wall (*Figure 3.34*).

Figure 3.34

Step 3

Thorough and complete mixing of the liquid epoxy is critical for the performance of the product. Pour small container of epoxy saturating resin into the large container and mix on low speed with a drill and the supplied paddle mixer for at least five minutes. (*Figure 3.35*).

Figure 3.35

© 2024 Supportworks®
All Rights Reserved

Step 4

Pour mixed liquid epoxy into tray and saturate the prepared wall surface using the provided roller. Repeat this step with a second coat after allowing epoxy to soak into the wall for five minutes (*Figure 3.36*).

Figure 3.36

Step 5

Cut CarbonArmor strap to match the wall height. Place strap on a horizontal surface and use roller to saturate one side of the fabric (*Figure 3.37*).

Figure 3.37

Step 6

Place the wet side of the fabric against the wet wall. Keep the fabric straight and flat. Use the roller to saturate the fabric with a generously applied final coat of epoxy (*Figure 3.38*).

Figure 3.38

© 2024 Supportworks®
All Rights Reserved

The optional ArmorLock bracket and FRP system essentially splices with CarbonArmor straps to extend reinforcement to the building's rim joist and sill plate framing. ArmorLock provides supplemental support for the foundation wall's top connection to the sill plate. If the top of wall connection to the sill plate has shown signs of movement, then other options should be considered, such as the PowerBrace system. CarbonArmor and ArmorLock systems are again best suited for bowing block walls showing initial signs of distress.

Step 1

Evenly drape dry ArmorLock straps around bracket (*Figure 3.39*) and attach bracket to the sill plate and rim joist with eight #9 x 1-½-inch long wood screws (*Figure 3.40*).

Figure 3.39

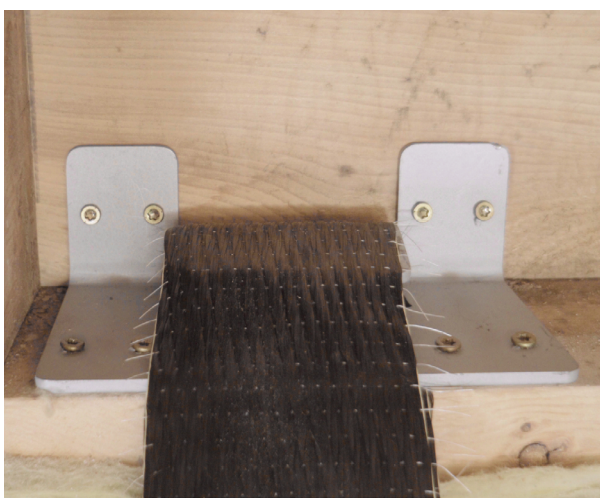

Figure 3.40

Step 2

Temporarily roll up ArmorLock straps, place on top of sill plate, and complete Steps 1 through 4 from *Section 3.4.2* (*Figure 3.41*).

Figure 3.41

Step 3

Unroll ArmorLock straps, wet both sides of each strap with liquid epoxy, pull tight and adhere to wall (*Figure 3.42*).

Figure 3.42

© 2024 Supportworks®
All Rights Reserved

Step 4

The wet side of the CarbonArmor strap is installed over and bonded to the ArmorLock straps as described in Step 6 from *Section 3.4.2* (*Figure 3.43*).

Step 5

Installation of the CarbonArmor Wall Reinforcing System with optional ArmorLock System complete (*Figure 3.44*).

Figure 3.43

Figure 3.44

3.4.2.2 Special Installation Considerations

- Do not apply to concrete less than 30 days old.
- Do not apply to concrete with curing or sealing membranes.
- The surface of the wall should be visibly dry and dry to the touch.
- Workplace shall be climate controlled.
- Do not apply to concrete with a surface temperature less than 45°F.
- Do not allow epoxy to freeze.
- Store epoxy in an appropriate environment to maintain temperature between 60 and 90 degrees Fahrenheit.
- Do not thin epoxy with solvent.
- Installations with exposure to ultraviolet rays shall be covered or otherwise UV-protected with a proper coating of paint.

© 2024 Supportworks®
All Rights Reserved

CHAPTER 3

APPENDIX 3A

GeoLock® Wall Anchor System

Plate Steel:
ASTM A1011 C1008-C1010, 10 gauge plate
embossed with two (2) longitudinal ribs

Wall Plates:
Two sizes: 12" x 18" and 12" x 28"

Earth Plates:
Fabricated from two wall plates
welded in a cross pattern
One inch on each end of wall plates
is bent 90 degrees
Three sizes: 16" x 16", 16" x 26", and 26" x 26"

All-Thread Rod:
Medium Carbon Steel
80" long (assembly consists of two rods)
¾ - 10 UNC 2A
Tensile strength = 85 ksi (min.)
Allowable tensile capacity = 14 kips

Rod Coupler:
3" long x 0.984" diameter, AISI 1144
¾ - 10 UNC 2B, oversized tap
Yield strength = 100 ksi (min.)
Tensile strength = 115 ksi (min.)

Termination Hardware:
SAE J995 Grade 2 heavy square nuts
¾ - 10 UNC 2B, oversized tap

Hemispherical Washer:
Two-piece machined steel washer
ASTM A108 Grade 1018 or 1215
Yield strength = 54 ksi (min.)
Tensile strength = 64 ksi (min.)
Ø2.00" x 0.70" assembled
Bright electrozinc coating per ASTM B633

Finish:
Unless noted otherwise, all components are
hot-dip galvanized in accordance with ASTM
A123 or ASTM A153

Alternate Wall Bracing Detail:
C6 x 8.2 steel channel, ASTM A36
Channel secured at base with steel bracket
or cast into concrete. Bracket is
3.75" x 1.75" x 0.25" thick x 4.5" long bent plate,
ASTM A36, with (2) Ø0.625" holes.
(2) Ø1/2" x 3" concrete screw anchors(3)

Standard Wall Plate Detail

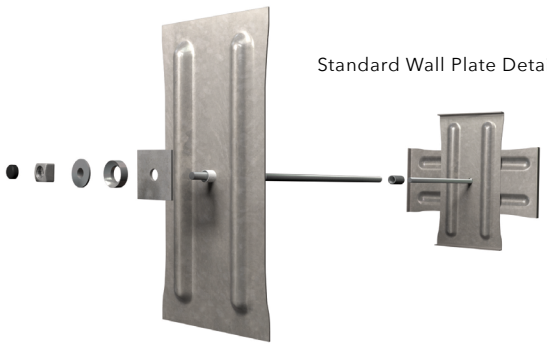

Alternate Channel Detail

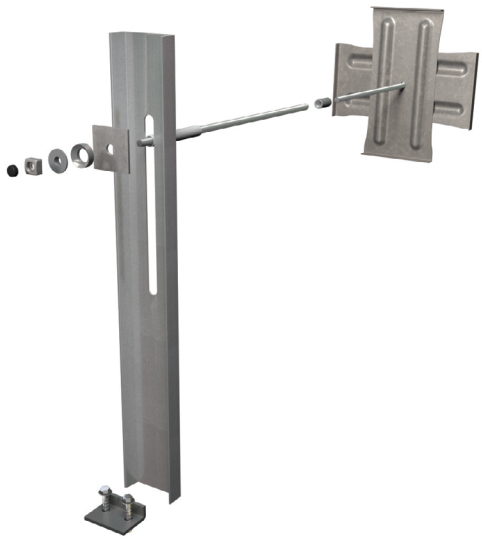

(1) Installation of any tieback or anchor system in potential landslide or hillside creep soils should be designed by a professional engineer.

(2) Refer to *Section 3.2.2* of the Foundation Supportworks Technical Manual for recommendations on anchor spacing, depth and location of earth plate, and installation torque.

(3) Concrete slab should be intact and have a thickness of at least 3.5". For broken or thin slabs, contact Foundation Supportworks for alternative installation guidelines.

© 2024 Supportworks®
All Rights Reserved

CHAPTER 3

APPENDIX 3B

PowerBrace™ Wall Bracing System

PBB, PBBW4 (Power Brace Beam):

Standard: S4x7.7 ASTM Grade 50 with length of 8 or 9 feet
Optional: W4x13 ASTM Grade 50 with length of 8 or 9 feet

PBTBEXP (Bridge Bracket):

(Joists Perpendicular to Wall)

(2) Telescoping pieces bent from 10 gauge ASTM A572 Grade 50 plate adjusted to a total length between 13.5" and 16.5" with holes for bracket hardware
(4) Ø¾" x 3" long ASTM A307 bolts with nuts and washers
(1) Ø1" x 5" long ASTM A307 tightening bolt with machined nut
2.50" long ASTM A36 bent plate beam capture

PB2TB2 and PB2TBR (Lever Bracket and Runner):

(Joists Parallel to Wall)

5⁄16" ASTM A572 Grade 50 bent plate with holes for bracket hardware and Ø1" welded nut
10 gauge x 3" x 60" long ASTM A572 Grade 50 strap with holes for wood screws
(1) Ø¾" x 5" long SAE Grade 5 bolt with nut
(1) Ø1" x 9" long ASTM A307 tightening bolt
2.50" long ASTM A36 bent plate beam capture
(30) #10 x 2.00" long wood screws

PB2BB1 (Bottom Bracket):

¼" ASTM A572 Grade 50 L-shaped bent plate 1.56" x 1.50" x 4.88" long with holes for bracket hardware
(2) Ø½" x 3" concrete screw anchors(11)

Note: For additional system configurations, visit www.onstableground.com

Surface Finish:

All components of the bracket assemblies are electrozinc plated per ASTM B633. Steel beams are provided as hot-dip galvanized per ASTM A123 or electrozinc plated per ASTM B633.

Spacing Recommendations for Bowing CMU Block Walls(1,2,3,4,5,6,7,9,10) (ft)

Backfill Elevation Below Top of Wall (ft)	Wall Height		
	11 Courses 7'-4"	12 Courses 8'-0"	13 Courses 8'-8"
Full Backfill	4.5	4.0	3.0
1	5.5	4.5	4.0
2	6.0	5.5	4.0
3	6.0	6.0	5.5
4	6.0	6.0	5.5
5	6.0	6.0	6.0

Spacing Recommendations for Leaning Poured Concrete Walls(1,2,3,4,5,6,8,9,10) (ft)

Backfill Elevation Below Top of Wall (ft)	Wall Height (ft)	
	8	9
Full Backfill	4.0	3.0
1	5.5	4.0
2	6.0	5.5
3	6.0	6.0
4	6.0	6.0
5	6.0	6.0

(1) Maximum recommended spacing from corners is 3 feet for both CMU and poured concrete walls.

(2) Spacing could be less than listed in the above charts based on the condition of the wall and severity of the wall displacement.

(3) Torque applied to the adjustment bolt at the top bracket should not exceed 45 ft-lb for bowing CMU block wall applications.

(4) Torque applied to the adjustment bolt at the top bracket should not exceed 50 ft-lb for leaning poured concrete wall applications.

(5) Listed wall heights include the full height from top of footing to top of wall. Spacing recommendations assume the bottom 4 inches of the wall are restrained by an interior concrete slab.

(6) Recommended spacing conservatively assumes the backfill soils exert an equivalent fluid pressure (EFP) equal to 75 psf/ft which is 25% greater than the maximum EFP recommended in the prescriptive guidelines of the IRC. The design professional may choose to consider alternate values of EFP based on project specific conditions.

(7) Bowing CMU block walls typically show maximum inward movement at a horizontal crack along a mortar bed joint. This point of maximum displacement most often occurs in the upper courses of the block wall which is why a standard beam size of S4x7.7 is recommended. If the maximum inward movement occurs lower than 4 bed joints from the top of the wall (32") then a larger beam size should be considered. If the maximum inward movement occurs lower than 5 bed joints from the top of the wall (40") then the bottom of the beam should be embeded in the concrete slab in place of the standard bottom bracket assembly.

(8) Leaning poured concrete walls are often generally intact and typically show maximum inward movement at the top of the wall. Poured concrete walls that are bowing or have unusual crack patterns should consider alternate spacing and design recommendations.

(9) Refer to *Section 3.1.6* of this Technical Manual for further discussion about the design methodology used to develop these recommendations.

(10) Because variations in building design and construction materials are common, PowerBrace™ applications should be reviewed by a qualified professional.

(11) Concrete slab should be intact and have a thickness of at least 3.5". For broken or thin slabs, contact Foundation Supportworks for alternative installation guidelines.

10/1/23

© 2024 Supportworks®
All Rights Reserved

CHAPTER 3

APPENDIX 3C

CarbonArmor® Wall Reinforcing System

Cured Composite Design Properties[1,2,3]	
Property	**Design Value**
Tensile Strength	98 ksi
Tensile Modulus	9,150 ksi
Elongation at Break	1.07%
Tensile Strength per Inch Width	6.37 k/in
Laminate Thickness	0.065 in
CarbonArmor Strap Width	7.25 in
ArmorLock Strap Width	3.00 in

ArmorLock Bracket (Optional):
3⁄16" ASTM A36 bent plate
1.95" x 2.50" x 7.00" long with holes for bracket hardware
Electrozinc plated per ASTM B633
(8) #9 x 1-½" wood screws

(1) When laminated with Foundation Supportworks Saturating Resin – 2500.

(2) Reported values are those recommended for use in design and have already been reduced from the maximum values observed in laboratory testing.

(3) Test procedure in accordance with ASTM D3039.

Note: Safety Data Sheets (SDS) for the CarbonArmor carbon fabric, both components of the epoxy liquid, and both components of the epoxy paste are available upon request.

Rendering of the CarbonArmor® system installed within a basement

© 2024 Supportworks®
All Rights Reserved

Spacing Recommendations

Spacing Recommendations for Bowing 8" CMU Walls (ft) [1,2,3,5,7]				
Backfill Elevation Below Top of Wall (ft)	Wall Height (ft) [4]			
	11 Courses 7"-4"	12 Courses 8"-0"	13 Courses 8"-8"	14 Courses 9"-4"
Full Backfill	4.67	4.00	2.67	2.00
1	4.67	4.67	4.00	2.67
2	4.67	4.67	4.67	4.00
3	4.67	4.67	4.67	4.67
4	4.67	4.67	4.67	4.67
5	4.67	4.67	4.67	4.67

Spacing Recommendations for Bowing 8" Poured Concrete Walls (ft) [1,2,3,5,6,7]			
Backfill Elevation Below Top of Wall (ft)	Wall Height (ft) [4]		
	8	9	10
Full Backfill	5.00	4.50	2.50
1	5.00	5.00	3.50
2	5.00	5.00	5.00
3	5.00	5.00	5.00
4	5.00	5.00	5.00
5	5.00	5.00	5.00

Spacing Recommendations for Bowing 10" CMU Walls (ft) [1,2,3,5,7]				
Backfill Elevation Below Top of Wall (ft)	Wall Height (ft) [4]			
	11 Courses 7"-4"	12 Courses 8"-0"	13 Courses 8"-8"	14 Courses 9"-4"
Full Backfill	4.67	4.67	4.00	2.67
1	4.67	4.67	4.67	4.00
2	4.67	4.67	4.67	4.67
3	4.67	4.67	4.67	4.67
4	4.67	4.67	4.67	4.67
5	4.67	4.67	4.67	4.67

Spacing Recommendations for Bowing 10" Poured Concrete Walls (ft) [1,2,3,5,6,7]			
Backfill Elevation Below Top of Wall (ft)	Wall Height (ft) [4]		
	8	9	10
Full Backfill	5.00	5.00	3.50
1	5.00	5.00	5.00
2	5.00	5.00	5.00
3	5.00	5.00	5.00
4	5.00	5.00	5.00
5	5.00	5.00	5.00

(1) Spacing tables have been developed with consideration for the recommendations of ACI 440, design calculations, and current industry state of practice. The carbon fiber straps are to be installed per the installation instructions and must be the full height of the wall.

(2) Listed spacing is center-to-center. Maximum recommended spacing from corners is 3 feet but should also not exceed the spacing of the interior straps.

(3) Spacing could be less than listed in the above charts based on the condition of the wall and severity of the displacement.

(4) Listed wall heights include the full height from top of footing to top of wall. Spacing recommendations assume the bottom 4 inches of the wall are restrained by an interior concrete slab.

(5) Recommended spacing assumes the backfill soils exert an equivalent fluid pressure (EFP) equal to 60 psf/ft. The design professional may choose to consider alternate EFP values based on project-specific conditions.

(6) Poured concrete walls most often show signs of distress by leaning instead of bowing. Leaning concrete walls are often intact and typically show maximum inward movement at the top of the wall. Leaning concrete walls may not benefit from carbon fiber strengthening and should consider alternate design recommendations to address the deficient connection at the top of the wall.

(7) Because variations in building design and construction materials are common, CarbonArmor® applications should be reviewed by a qualified professional.

© 2024 Supportworks®
All Rights Reserved

CHAPTER 4

Crawl Space Support Systems

4.1 Summary Description

The SmartJack® System is installed within a crawl space to provide supplemental vertical support for the structure's floor system. SmartJacks are installed adjacent to existing settling columns, along the span of floor joists, and along the span of primary and secondary beams and girders. The SmartJack may be considered as supplemental column support where an existing column and pier foundation has settled, or as supplemental support to the structure's wood framing. The wood framework of the floor system may yield or sag over time as a result of:

- the unsupported length of joists, beams or girders being greater than the spanning capability of the members,
- exceeding design floor load values after construction, and
- weakening of members due to high moisture conditions typical in crawl space environments.

The SmartJack may also be used as supplemental column support where an existing column and pier foundation has settled.

The system often consists of a two-foot square by two-foot deep excavation backfilled with crushed stone or recycled concrete, a steel or aluminum base, round or square steel tube, all-thread rod, and a top bracket (*Figure 4.1)*.

Figure 4.1 Rendering of Model 350 SmartJacks providing supplemental support for joists in a crawl space

Technical specifications for both the Model 288 (2.875-inch O.D. tube) and Model 350 (3.50-inch square tube) SmartJack systems are included in Appendix 4A. Each system offers multiple top bracket and base options. Top brackets are available to support existing beams and new supplemental wood beams, to capture and support commonly considered structural steel shapes used as supplemental beams, and to splice steel supplemental beams over a SmartJack post for a continuous beam installation (*Figure 4.2*). Base options are sized for bearing on poured concrete footings, a cube of compacted crushed stone, and existing soil determined to be of adequate strength.

The 288 and 350 systems function similarly and follow similar installation steps, even with the details of the components being different throughout. The 288 SmartJack utilizes a 2.875-inch O.D. round steel tube as the post and generally slip-fit connections between components.

The 350 SmartJack was designed with a 3.5-inch square steel post and component details that allow positive connections to be made between all components of the system, from the supplemental beam down to the post base. These connections are generally made with self-drilling screws. Another feature/benefit of the 350 system is that the adjustable all-thread rod can be "locked" in position following installation, while also allowing future adjustability, if necessary. This is accomplished by lining up the drilled holes in the all-thread rod and top bracket and installing a ¼-inch diameter bolt and nut. These screwed and bolted connections do not affect the capacity of the system and should be considered optional and at the discretion of the contractor, project engineer, or building official. If positive connections are not required, simply leave the pre-made holes open and without fasteners.

© 2024 Supportworks®
All Rights Reserved

A poured concrete footing may be considered in lieu of, or as a partial replacement for, the cube of crushed stone. The crushed stone, however, is an important feature to the SmartJack system and offers several benefits. First, the crushed stone replaces potentially weak and moisture sensitive soils near the surface to minimize potential SmartJack movement due to changes in the bearing soil's moisture content or density. Well-compacted crushed stone also effectively supports the higher bearing pressure conditions immediately below the base and then transfers lower pressures to the surrounding soils. Lastly, use of compacted crushed stone versus a poured concrete footing allows for SmartJack installations to most often be completed in one day.

Foundation Supportworks also offers a large (16 inches by 36 inches) aluminum plate footing for applications where the floor movement is caused by sagging beams or joists, and NOT weak soil conditions. Surficial loose, soft, wet or dry soil is removed down to adequate bearing, a sand or cement-sand leveling course is placed (as needed), and the plate footing is set. The plate footing distributes load to the soil similarly as a 2-foot square poured concrete footing, while also allowing for an expedited system installation versus waiting days for concrete to cure. The plate footing was designed for use with the 350 SmartJack sytem, but is also compatible with the 288 SmartJack post.

Figure 4.2 Optional Model 350 bracket details for connecting to and splicing steel beams (Left to right; plate bracket, u-bracket, splice bracket).

4.1.1 Advantages

- Installs in tight conditions where height or access is limited
- Crushed stone footing "system" effectively transfers load to existing soils
- All-thread rod allows for fine vertical adjustments
- Immediate stabilization and results
- Steel components are galvanized and electrozinc plated for corrosion resistance
- Usually installed in less than one day
- Can be installed in conjunction with a crawl space liner
- Positive, secure connections can be made between all components - *350 SmartJack System*
- All-thread rod can be locked in position, but still allow future adjustability, if needed - *350 SmartJack System*

© 2024 Supportworks®
All Rights Reserved

4.2 Installation Steps

The following steps provide a broad overview of a typical SmartJack system installation. Intermediate steps, installation equipment and tools used, and considerations for unusual conditions or applications are not addressed. Optional base and footing details as well as top connection details to the beams, girders and floor joists may also be considered.

Step 1

Two-foot cube of soil is excavated and the hole is backfilled with compacted crushed stone (*Figure 4.3*).

Figure 4.3

Step 2

Post Base is placed on the crushed stone, centered under the beam, and leveled to accept the SmartJack post (*Figure 4.4*).

Figure 4.4

© 2024 Supportworks®
All Rights Reserved

Step 3

Galvanized steel tube is cut to the appropriate post length (*Figure 4.5*).

Figure 4.5

Step 4

Steel post and other components are assembled and connected to the beam (*Figure 4.6* and *Figure 4.7*).

Figure 4.6

Figure 4.7

© 2024 Supportworks®
All Rights Reserved

Step 5

SmartJack System is tightened in place, stabilizing the joists, beams, or girders and potentially lifting the above floors and walls back toward level (*Figure 4.8*).

Figure 4.8

Step 6

Completed 350 SmartJack installation in conjunction with a crawl space liner (*Figure 4.9*). 350 SmartJack with top U-bracket, 12" base and secure connections throughout *(Figure 4.10)*. 350 SmartJack with large plate footing, no fasteners *(Figure 4.11)*.

Figure 4.9

Figure 4.10

Figure 4.11

© 2024 Supportworks®
All Rights Reserved

4.3 SmartJacks with Push Piers

A popular system variation involves installation of 288/350 SmartJacks on installed push piers. Refer back to Section 2.11.1 for a detailed description and installation guidelines.

Figure 4.12 Graphic of push pier/SmartJack installation. Backfill around base of SmartJack not shown for clarity. Backfill is required.

© 2024 Supportworks®
All Rights Reserved

CHAPTER 4

APPENDIX 4A

SmartJack® Systems

MODEL 288 SMARTJACK® SYSTEM

General Arrangement

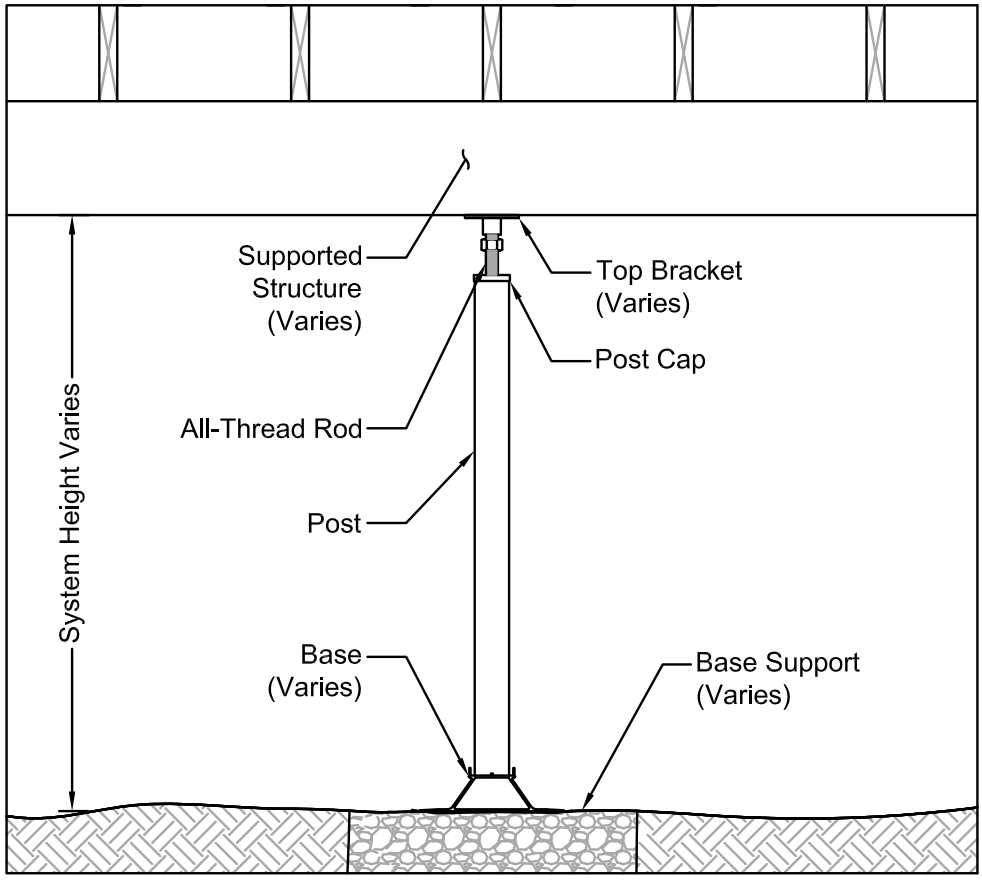

Allowable Capacity

The allowable system compression capacity of the assembled 288 SmartJack system is limited to the least value of the component capacities used in the system assembly. The component capacities are listed in the *Technical Specifications* section.

The allowable load applied to the SmartJack system may be limited by the bearing capacity of the existing soil. The well-compacted crushed stone or recycled concrete base is a proven method to increase support for the higher bearing pressure condition immediately below the aluminum base and then to absorb and distribute lower pressures to the existing soils. Should settlement of the SmartJack system occur, adjustments are made easily by extending the all-thread rod.

The SmartJack is designed to support axial compression loads only. The SmartJack should not be used in applications where the system is intended to resist tension or lateral loads.

© 2024 Supportworks®
All Rights Reserved

Top Bracket Variations

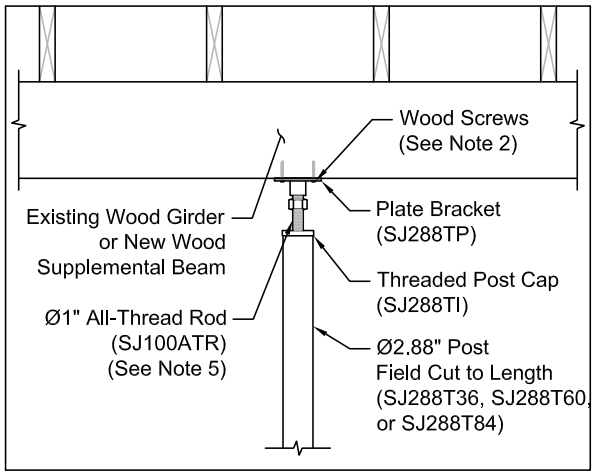

Plate bracket with new or exisiting wood girder

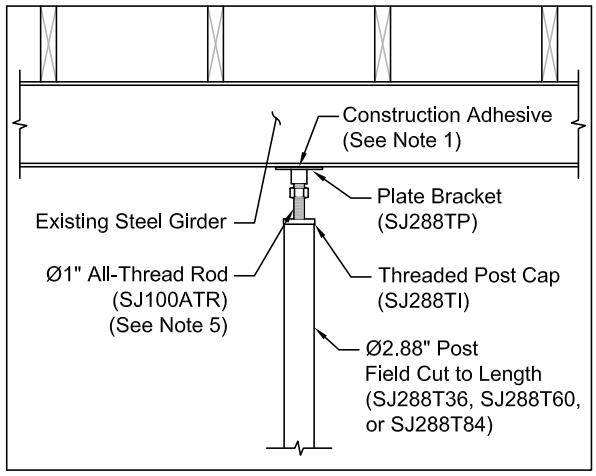

Plate bracket with exisitng steel girder

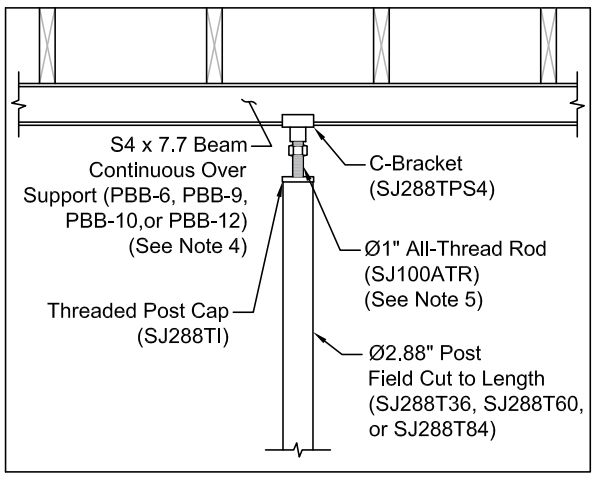

C-bracket with S4 x 7.7 supplemental beam

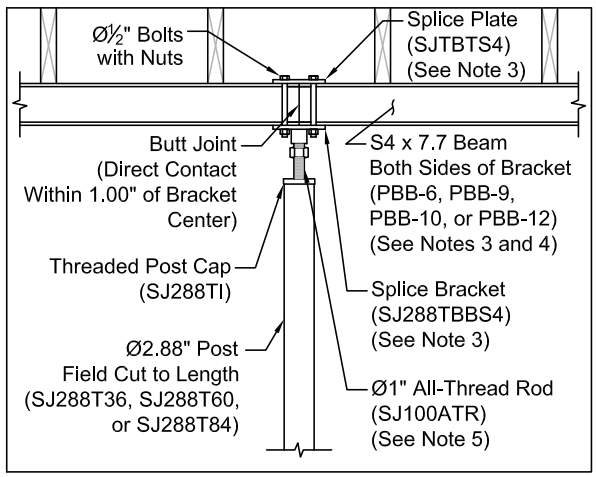

Splice bracket with new S4 x 7.7 supplemental beam

(1) Construction adhesive should be used in interior basement applications to maintain positive attachment to a supported steel beam.

(2) Wood screws may be used as an optional feature to maintain positive attachment to a supported wood beam.

(3) Splice bracket should only be used at interior supports when supporting beams of similar length on both sides. Splice brackets shall not be used to support cantilevered beams.

(4) Additional requirements for the support of cantilevered beams can be found within the design example later in this appendix.

(5) All-thread rod must be fully engaged through the thickness of the threaded post cap.

© 2024 Supportworks®
All Rights Reserved

Base Plate Variations

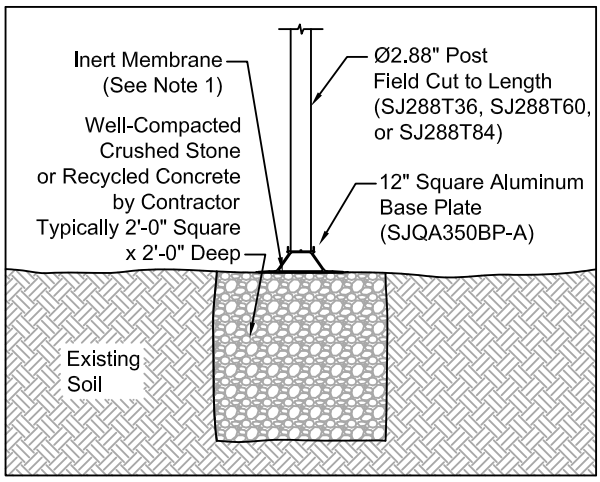

Base plate over crushed stone

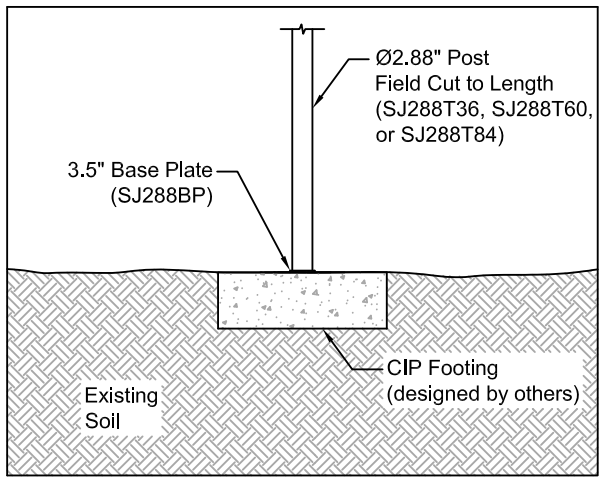

Base plate with CIP footing

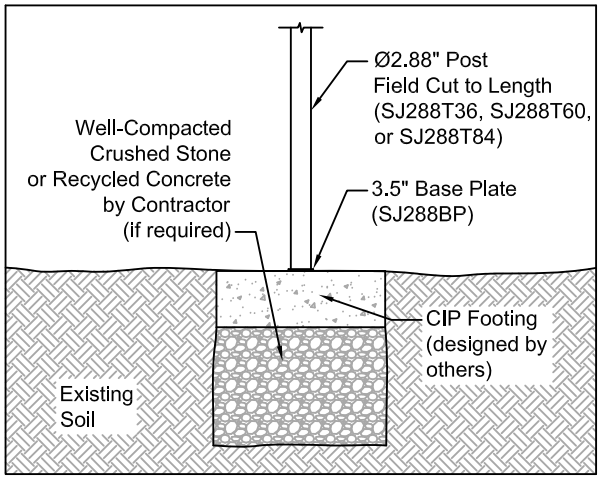

Base plate with CIP footing over crushed stone

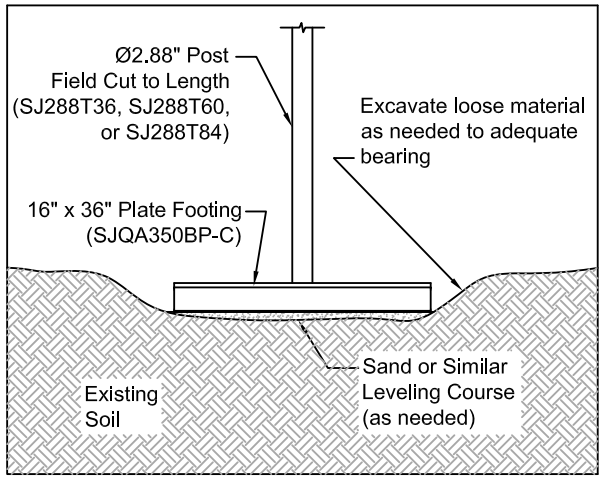

Plate footing with leveling course

(1) An inert membrane is recommended beneath the aluminum base to separate it from recycled concrete fill or poured concrete.

© 2024 Supportworks®
All Rights Reserved

SJ288/SJQA350 to PP237/PP288

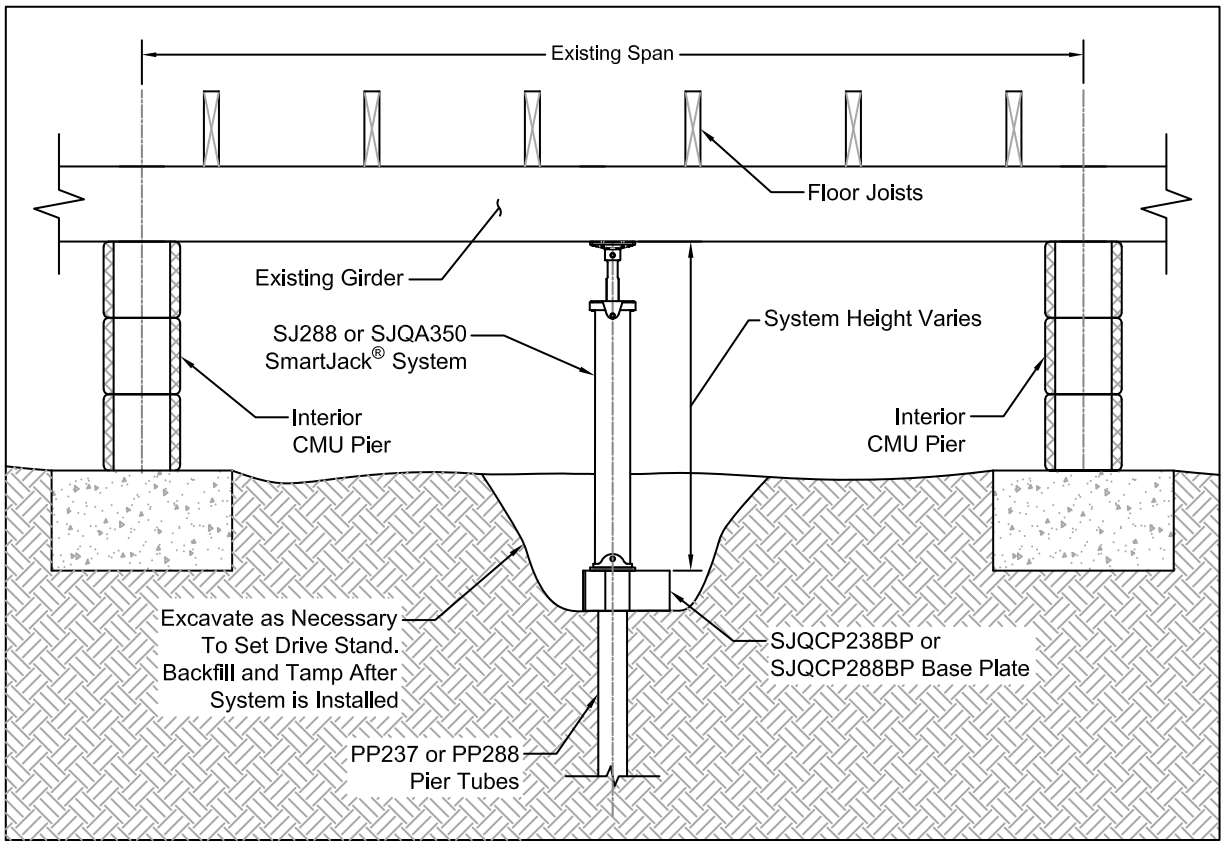

(1) Angular variqance between the centerlines of the SmartJack post and concentric pier tube should not exceed 2.5 degrees.

(2) Soil shall be adequately compacted around the base plate.

© 2024 Supportworks®
All Rights Reserved

SJ288TP (Plate Bracket):
¼" x 4.50" square ASTM A36 plate
Ø1.50" x 0.250" wall x 1.38" long CDS or DOM confining ring
Allowable compression with sawn lumber girder = 4.0 kips
Allowable compression with structural steel girder = (will not govern)

SJ288TPS4 (C-Bracket):
For use in combination with PowerBrace™ (S4x7.7) beams
3⁄16" x 3.00" x 6.00" ASTM A36 bent plate
Ø1.50" x 0.250" wall x 1.38" long CDS or DOM
Allowable compression = (will not govern)

SJ288TBBS4, SJTBTS4 (Beam Splice Bracket):
For use in combination with PowerBrace™ (S4x7.7) beams
(2) - ⅜" x 4.50" x 5.00" ASTM A36 plates
Ø1.50" x 0.250" wall x 1.38" long CDS or DOM
(4) - Ø½" x 5.50" bolts with nuts
Allowable compression = 8.3 kips

SJ100ATR (All-Thread Rod):
Ø1" x 8.00" long ASTM F1554 Grade 55 all-thread rod with welded heavy hex nut
Yield strength = 55 ksi (min.)
Tensile strength = 75 ksi (min.)
Allowable compression for system for system heights up to 9 feet = 16.9 kips

SJ288TI (Threaded Post Cap):
Ø3.00" OD x 1.00" thick ASTM A108 Grade 1018 machined and tapped insert
Yield strength = 54 ksi (min.)
Tensile strength = 64 ksi (min.)
Allowable compression for system heights up to 9 feet = (will not govern)

SJ288T36, SJ288T60, SJ288T84 (Post):
Ø2.88" OD x 0.165" wall x 36", 60", or 84" long, field cut to length, ASTM A500 Grade C triple-coated in-line galvanized tube
Yield strength = 50 ksi (min.)
Tensile strength = 55 ksi (min.)
Allowable compression varies by system height - see table on the next page

SJQA350BP-A (Bottom Plate):
For use with crushed stone support
3.00" tall x 12.00" square 6005A-T61 or 6061-T6 extruded aluminum with 0.10" and 0.16" thick capture tabs
Allowable compression = 9.5 kips

SJ288BP (Bottom Plate):
¼" x 3.50" square ASTM A36 plate
HSS 2.00" x 2.00" x 0.25" wall tube x 0.75" long ASTM A500 Grade B tube
Allowable compression (when used against concrete with minimum f'_c = 2,500 psi) = 10.7 kips

SJQCP238BP/SJQCP288BP (SmartJack to Push Pier Base Plate):
For use with PP237 (SJQCP238BP)
Ø2.75" x 0.156 wall x 4.00" long ASTM A513 Type 5 pipe
¼" x 4.00" x 4.00" and 5/16" x 4.50 x 4.50 ASTM A36 bearing plate
¼" ASTM A36 bent capture plate
For use with PP288 (SJQCP288BP)
Ø3.38" x 0.188" wall x 4.00" long ASTM A53 Grade B pipe
¼" x 4.00" x 4.00" and 5/16" x 4.50 x 4.50 ASTM A36 bearing plate
¼" ASTM A36 bent capture plate
Electrozinc plated per ASTM B633
Allowable compression = (will not govern)

PBB-6, PBB-9, PBB-10, PBB-12 (PowerBrace Beam):
S4 x 7.7 x 6', 9', 10', or 12' long, field cut to length, ASTM A572 Grade 50, hot-dip galvanized (ASTM A123) or electrozinc plated (ASTM B633)
Yield strength = 50 ksi (min.)
Tensile strength = 65 ksi (min.)
Allowable load varies by length of span – see table in Design Example

Corrosion Protection
The tube steel used for the 288 SmartJack® is manufactured with a triple-layer, in-line galvanized coating. This coating process consists of: (1) a uniform hot-dip galvanizing layer; (2) an intermediate conversion coating to inhibit the formation of white rust and enhance corrosion resistance; and (3) a clear organic top coating to further enhance appearance and durability. The inside of the tube also has a zinc-rich coating. Unless noted otherwise, all other components are provided as electrozinc plated per ASTM B633.

© 2024 Supportworks®
All Rights Reserved

SJ288T36, SJ288T60, and SJ288T84 Posts		
Post Length (ft)	**Maximum System Height (ft)**	**Allowable Axial Compression $P_c = P_n/\Omega$ (kips)**
1 to 5	5.6	27.4
6	6.6	23.9
7	7.6	20.4
8	8.6	16.9
9	9.6	13.8
10	10.6	11.3

The aluminum base is far less susceptible to corrosion than the steel components that surround it. There are, however, chlorides in some concrete that can be reactive with aluminum. It is recommended that an inert membrane be placed under the aluminum base to separate it from recycled or poured concrete. Crushed limestone or other crushed stone alternatives do not have similar considerations.

Design Example

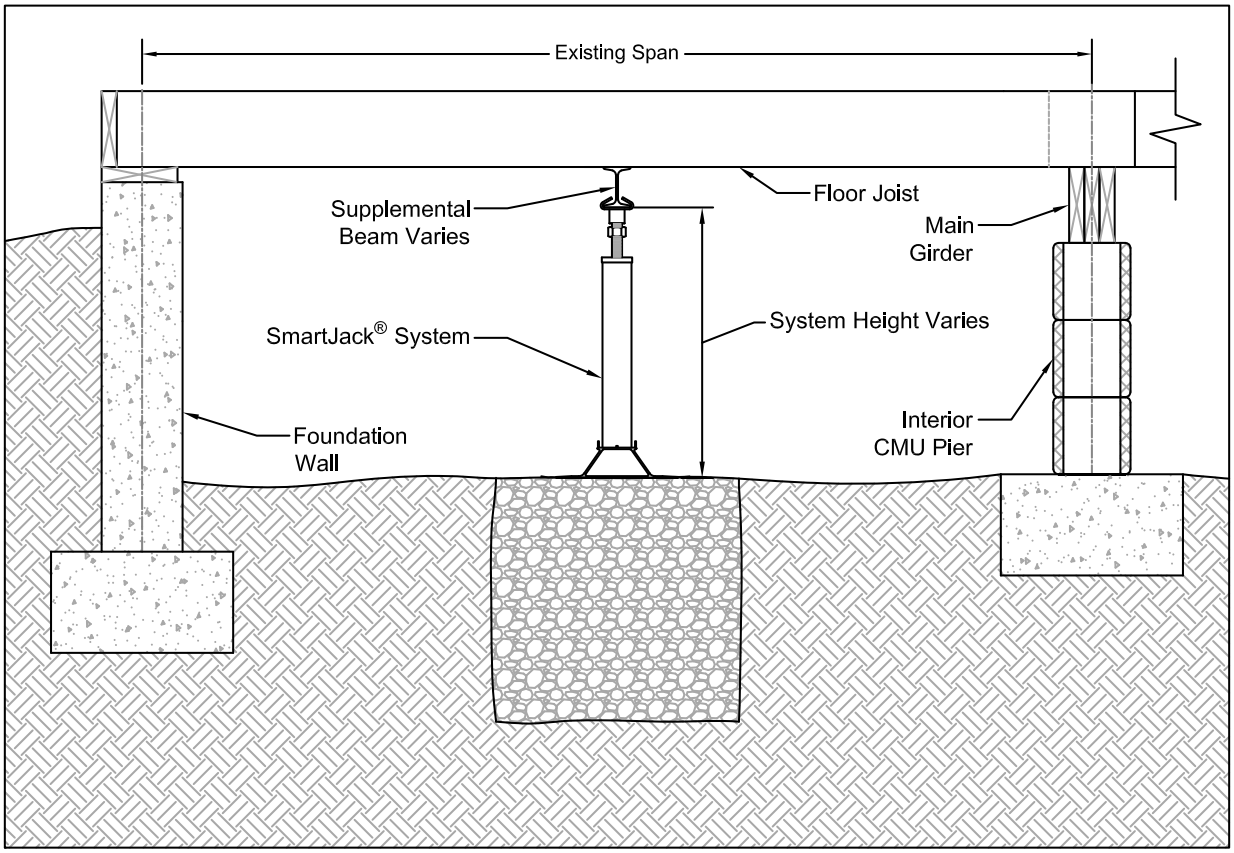

© 2024 Supportworks®
All Rights Reserved

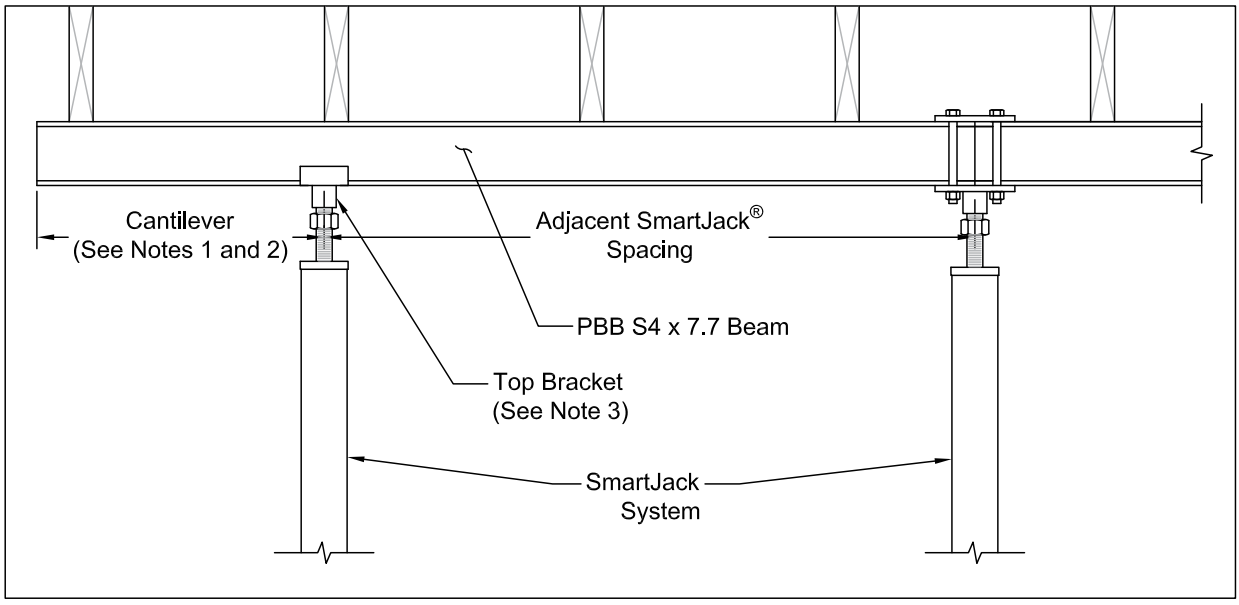

SJ288 Cantilever Arrangement

(1) Beam should extend past the centerline of the SmartJack system at least as far as the edge of the top bracket.

(2) The new supplemental beam may be cantilevered over the end support by a distance of 30 inches or by a distance of approximately 50% of the adjacent SmartJack spacing, whichever is less. Each beam segment must be supported by at least two SmartJack posts.

(3) Support of cantilevers requires use of top brackets that allow the supplemental beam to be continuous over the support. Splice brackets shall not be used to support cantilevered beams.

Step 1

Determine the load which will be supported by the new supplemental beam in pounds per linear foot:

Supplemental Beam Load (plf) = Existing Span (ft) × Total Floor Load (psf) ÷ 2

Note: Typical residential wood-framed construction may have an approximate floor load (15 psf dead load + 40 psf live load) = 55 psf total floor load.

Step 2

Determine the load on the interior SmartJack posts by multiplying the calculated supplemental beam load (plf) by the spacing of the SmartJack posts:

SmartJack Load (lb) = Supplemental Beam Load (plf) × SmartJack Spacing (ft)

Step 3

Verify that the calculated SmartJack load is less than the allowable capacity provided by the various system components, as well as the well-compacted crushed stone base and the bearing soils.

© 2024 Supportworks®
All Rights Reserved

Note: Without a detailed soil investigation, typical installations should assume no more than 1,500 psf allowable soil bearing pressure. This would equate to an allowable soil capacity of 6,000 lb for a 2' square cast-in-place concrete footing, a 2' cube of well-compacted crushed stone, or the 16" x 36" plate footing. Extremely soft soils may prohibit the use of a crushed stone base or plate footing and require that a larger poured concrete footing be utilized.

Step 4

Size the new supplemental beam by using the following table with both the SmartJack post spacing (ft) and the calculated supplemental beam load (plf). Choose a beam size that has an allowable load (plf) greater than the calculated supplemental beam load (plf) in step 1.

	Supplemental Beam Size	Supplemental Beam Allowable Load (plf)[1,2,3]					
		4 ft	5 ft	6 ft	7 ft	8 ft	SmartJack Post Spacing
Sawn Lumber[4]	(3) – 2 x 8	1,170	750	520	380	290	
	(3) – 2 x 10	1,760	1,120	780	570	440	
	(3) – 2 x 12	2,360	1,510	1,050	770	590	
	(1) – 4 x 6	850	550	380	280	210	
	(1) – 6 x 6	1,030	660	460	330	250	
Engineered Lumber[5]	3.5 x 5.5	1,250	740	420	270	180	
Structural Steel[6]	S4 x 7.7 (PowerBrace™ Beam)	3,780	2,070	1,200	750	500	
	W4 x 13	6,820	3,850	2,240	1,400	940	
	HSS 4 x 4 x ¼	5,190	2,650	1,530	960	640	
	HSS 4 x 2 x ¼ (Lying Flat in Plank Orientation)	990	500	290	180	120	

(1) This table makes no evaluation of the components of the existing structure.

(2) Allowable loads in this table assume the supplemental beam is sufficiently restrained against lateral torsional buckling at an interval equal to or less than the SmartJack post spacing.

(3) The new girder may be cantilevered over the end support by a distance of 30 inches or by a distance of approximately 50% of the adjacent SmartJack spacing, whichever is less. Each beam segment must be supported by at least two SmartJack posts.

(4) Sawn lumber is assumed to be Douglas Fir Larch - No. 2 or better.

(5) Engineered lumber is assumed to be iLevel 1.3E TimberStrand LSL or equivalent.

(6) Structural steel is assumed to be ASTM A572 Grade 50 or equivalent for wide flange shapes, and ASTM A500 Grade B or equivalent for HSS tube shapes.

Step 5

If the required supplemental beam size is undesirable, adjust spacing of the SmartJack posts and return to Step 2.

© 2024 Supportworks®
All Rights Reserved

MODEL 350 SMARTJACK® SYSTEM

General Arrangement

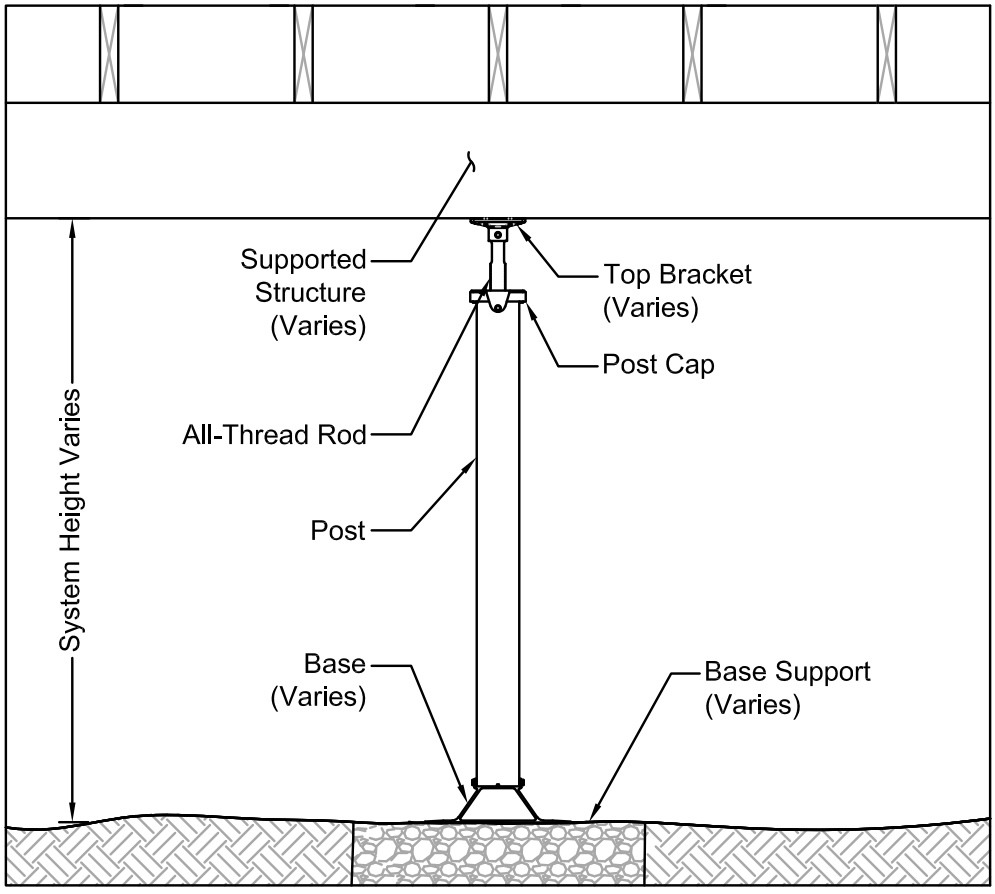

Allowable Capacity

The allowable system compression capacity of the assembled SmartJack system is limited to the least value of the component capacities used in the system assembly. The component capacities are listed in the *Technical Specifications* section.

The allowable load applied to the SmartJack system may be limited by the bearing capacity of the existing soil. The well-compacted crushed stone or recycled concrete base is a proven method to increase support for the higher bearing pressure condition immediately below the aluminum base, and then to absorb and distribute lower pressures to the existing soils. Should settlement of the SmartJack system occur, adjustments are made easily by extending the all-thread rod.

The SmartJack is designed to support axial compression loads only. The SmartJack does not provide resistance to tension or lateral loads.

© 2024 Supportworks®
All Rights Reserved

Top Bracket Variations

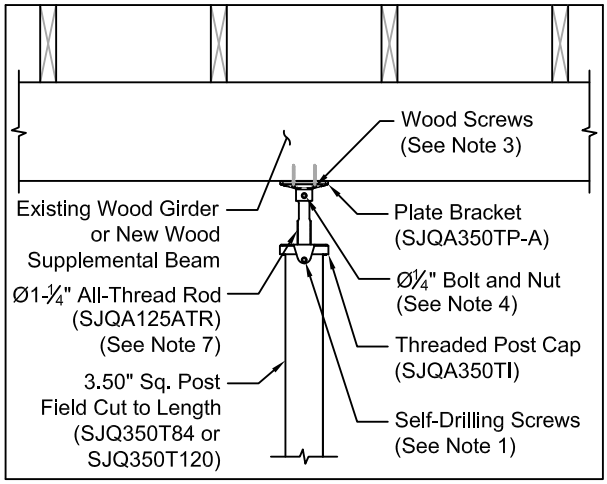

Plate bracket with new or existing wood girder

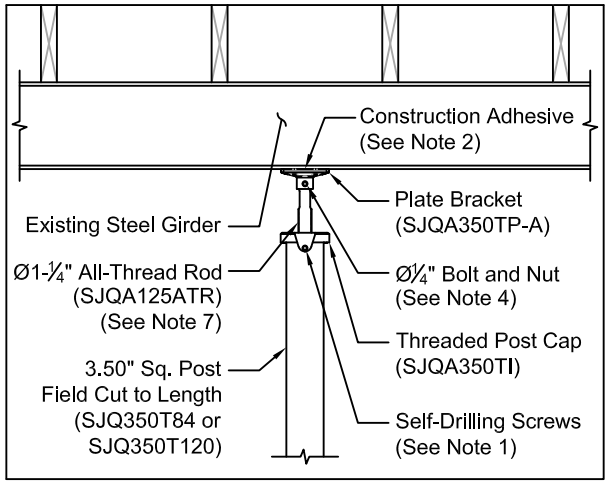

Plate bracket with existing steel girder

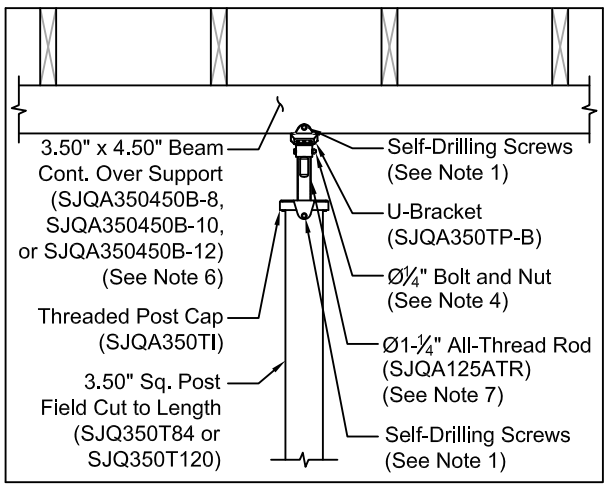

U-bracket with new 4" supplemental SmartJack® beam

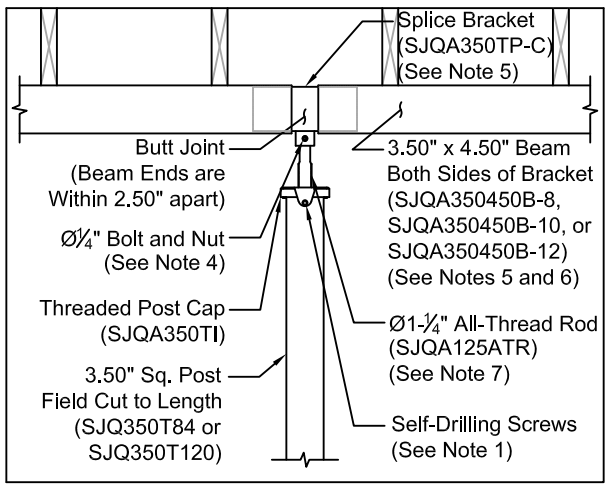

Splice bracket with new 4" supplemental SmartJack beam

(1) #14 or ¼" self-drilling screws may be used as an optional feature to maintain positive attachment between components.

(2) Construction adhesive should be used in interior *basement* applications to maintain positive attachment to a supported steel beam.

(3) Wood screws may be used as an optional feature to maintain positive attachment to a supported wood beam.

(4) ¼" bolt and nut should be used when disabling of the height adjustment mechanism is required. This bolt and nut may also be used as an optional feature to maintain positive attachment to the all-thread rod.

(5) Splice bracket should only be used at interior supports when supporting beams of similar length on both sides. Splice brackets shall not be used to support cantilevered beams.

(6) Additional requirements for the support of cantilevered beams can be found within the design example later in this appendix.

(7) All-thread rod must be fully engaged through the thickness of the threaded post cap.

© 2024 Supportworks®
All Rights Reserved

Base Plate Variations

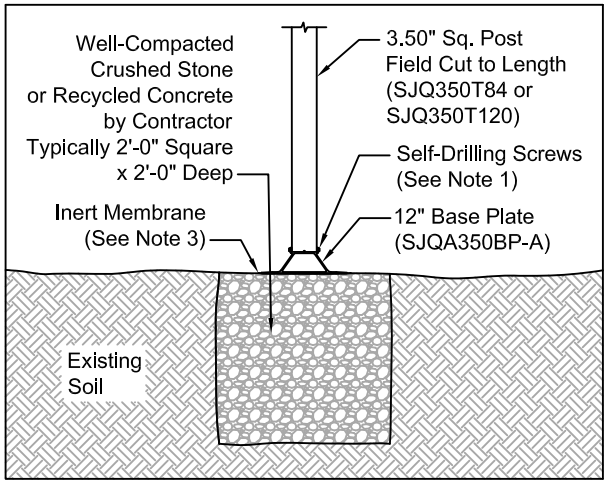

Base plate over crushed stone

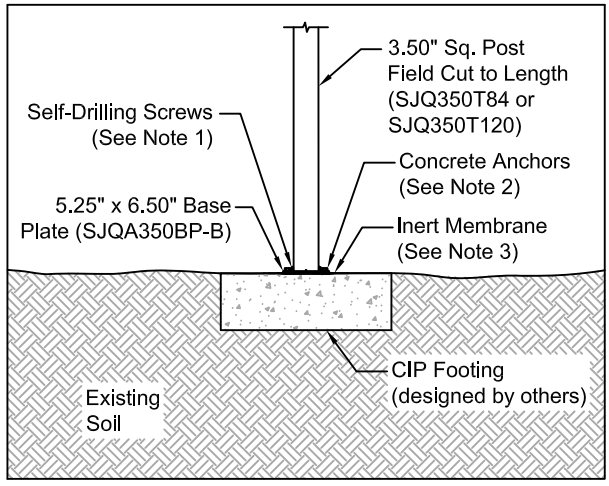

Base plate with CIP footing

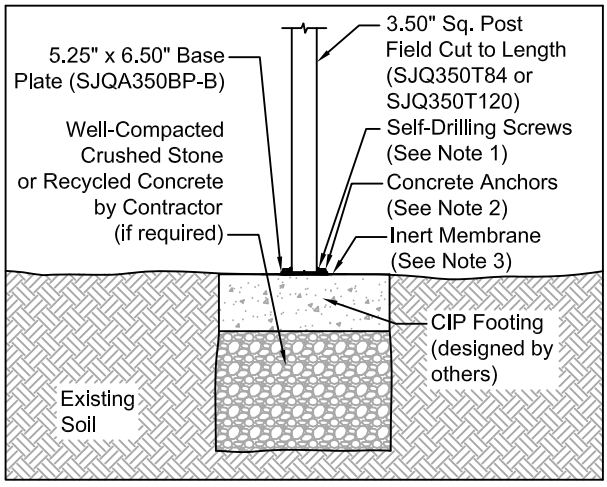

Base plate with CIP footing over crushed stone

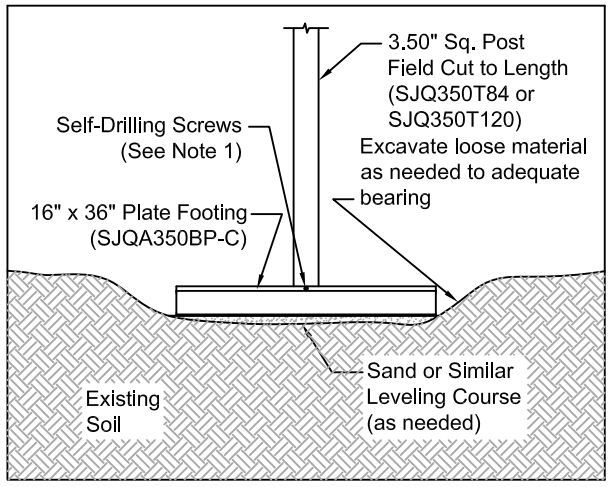

Plate footing with leveling course

(1) #14 or ¼" Self-drilling screws may be used as an optional feature to maintain positive attachment between components.

(2) ⅜" concrete screw anchors may be used as an optional feature to maintain positive attachment to a cast-in-place concrete footing.

(3) An inert membrane is recommended beneath the aluminum base to separate it from recycled concrete fill or poured concrete.

© 2024 Supportworks®
All Rights Reserved

SJ288/SJQA350 to PP237/PP288

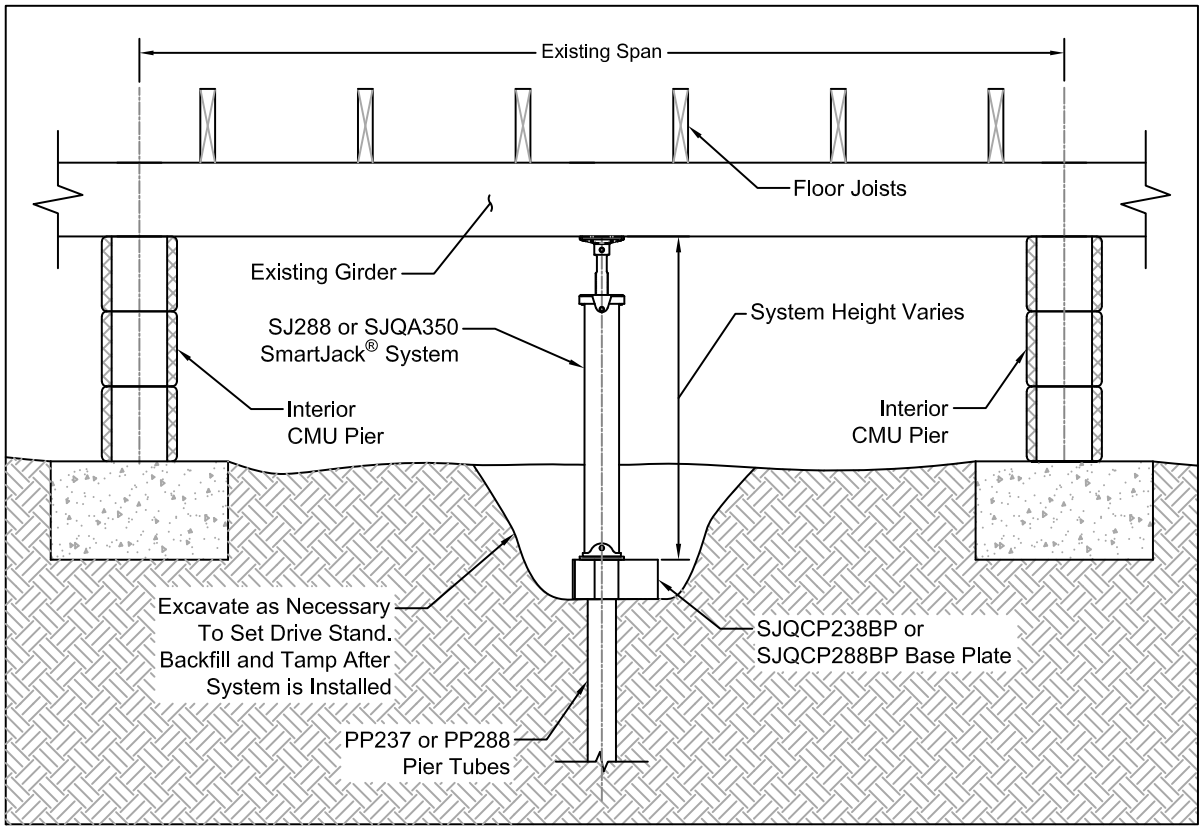

(1) Angular variance between the centerlines of the SmartJack post and concentric pier tube should not exceed 2.5 degrees.

(2) Soil shall be adequately compacted around entire bracket.

© 2024 Supportworks®
All Rights Reserved

SJQA350TP-A (Flat Plate Bracket):
0.68" x 4.50" square ANSI/AA 380 cast aluminum with Ø1.52" x 0.125" wall x 1.19" long confining ring
Allowable compression with sawn lumber = 14.0 kips
Allowable compression with structural steel girder = (will not govern)

SJQA350TP-B (U-Bracket):
For use in combination with SJQA350450B beams
1.00" x 2.50" x 3.88" ANSI/AA 380 cast aluminum with Ø1.52" x 0.125" wall x 1.19" long confining ring and 0.15" thick capture tabs
Allowable compression = 15.0 kips

SJQA350TP-C (Beam Splice Bracket):
For use in combination with SJQA350450B beams
5/16" x 2.95" x 4.15" x 9.75" bent ASTM A572 Grade 50 plate, electrozinc plated (ASTM B633)
Ø1.75" x 0.25" wall x 1.38" long CDS or DOM confining ring
Allowable compression = 17.5 kips

SJQA125ATR (All-Thread Rod):
Ø1-1/4" x 10.00" long ASTM F1554 Grade 55 all-thread rod with machined flats, electrozinc plated (ASTM B633)
Yield Strength = 55 ksi (min.)
Tensile Strength = 75 ksi (min.)
Allowable compression = 26.5 kips

SJQA350TI (Threaded Post Cap):
1.30" x 3.60" x 4.56" ANSI/AA 380 cast aluminum with tapped threads and 0.15" thick capture tabs
Allowable compression = 19.0 kips

SJQ350T84, SJQ350T120 (Post):
HSS 3.50" square tube x 0.095" wall x 84" or 120" long, field cut to length, ASTM A500 Grade C, triple-coated in-line galvanized, hot-dip galvanized (ASTM A123), or electrozinc plated (ASTM B633)
Yield strength = 50 ksi (min.)
Tensile strength = 62 ksi (min.)
Allowable compression varies by system height - see table on the next page

SJQA350BP-A (Bottom Plate):
For use with crushed stone support
3.00" tall x 12.00" square 6005A-T61 or 6061-T6 extruded aluminum with 0.10" and 0.16" thick capture tabs
Allowable compression = 9.5 kips

SJQA350BP-B (Bottom Plate):
For use with cast-in-place footing
0.31" x 5.25" x 6.50" ANSI/AA 380 cast aluminum with 0.10" thick capture tabs
Allowable compression = 26.5 kips

SJQA350BP-C (Plate Footing):
For use when placed directly against soil
3.50" tall x 15.80" x 36.50" 6005A-T61 or 6061-T6 extruded aluminum with 0.10" thick capture tabs
Allowable compression = 8.0 kips

SJQA350450B-8, SJQA350450B-10, SJQA350450B-12 (Beams):
Tube 4.50" x 3.50" x 0.135" wall x 8', 10', or 12' long, field cut to length, ASTM A500 Grade C, triple-coated in-line galvanized, hot-dip galvanized (ASTM A123), or electrozinc plated (ASTM B633)
Yield Strength = 50 ksi (min.)
Tensile Strength = 62 ksi (min.)
Allowable load varies by length of span – see table in Design Example section

SJQCP238BP/SJQCP288BP (SmartJack to Push Pier Base Plate):
For use with PP237 (SJQCP238BP)
Ø2.75" x 0.156 wall x 4.00" long ASTM A513 Type 5 pipe
¼" x 4.00" x 4.00" and 5/16" x 4.50 x 4.50 ASTM A36 bearing plate
¼" ASTM A36 bent capture plate
For use with PP288 (SJQCP288BP)
Ø3.38" x 0.188" wall x 4.00" long ASTM A53 Grade B pipe
¼" x 4.00" x 4.00" and 5/16" x 4.50 x 4.50 ASTM A36 bearing plate
¼" ASTM A36 bent capture plate
Electrozinc plated per ASTM B633
Allowable compression = (will not govern)

© 2024 Supportworks®
All Rights Reserved

SJQ350T84 and SJQ350T120 Posts[1]		
Post Length (ft)	**Maximum System Height (ft)**	**Allowable Axial Compression $P_c = P_n/\Omega$ (kips)[1]**
1 to 5	5.75	29.5
6	6.75	27.6
7	7.75	25.5
8	8.75	23.3
9	9.75	21.0
10	10.75	18.8

(1) The SJQA350450B beams may be used as an alternate for the SJQ350T posts. The allowable axial compression capacity of the SJQA350450B tube is greater than the allowable axial compression capacity of the SJQ350T tube and will not govern.

Design Example

The aluminum base is far less susceptible to corrosion than the steel components that surround it. However, there are chlorides in some concrete that can be reactive with aluminum. It is recommended that an inert membrane be placed under the aluminum base to separate it from recycled or poured concrete. Crushed limestone or other crushed stone alternatives do not have similar considerations.

The following design example illustrates an application which utilizes the SmartJack® system to provide supplemental support of an existing span of floor joists which are not supporting any load bearing walls or columns. The SmartJack system may also be used to provide supplemental support of existing beams and girders, but the evaluation of the loads involved is more complex than can be addressed in this design example.

Design Example

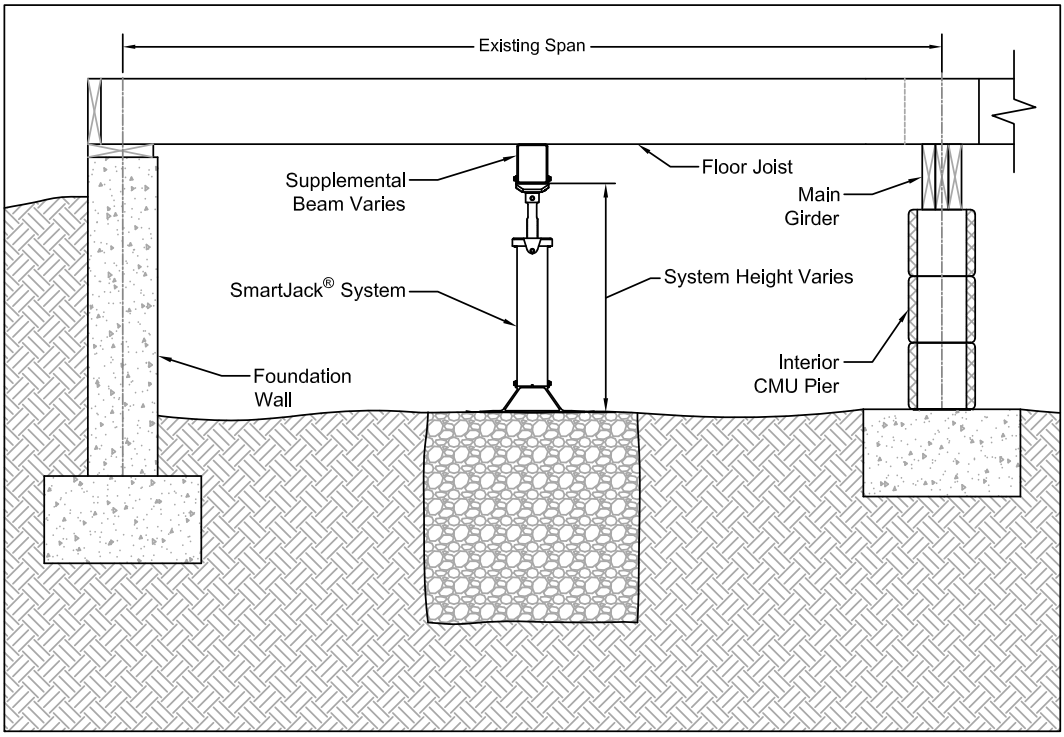

© 2024 Supportworks®
All Rights Reserved

Cantilever Arrangement

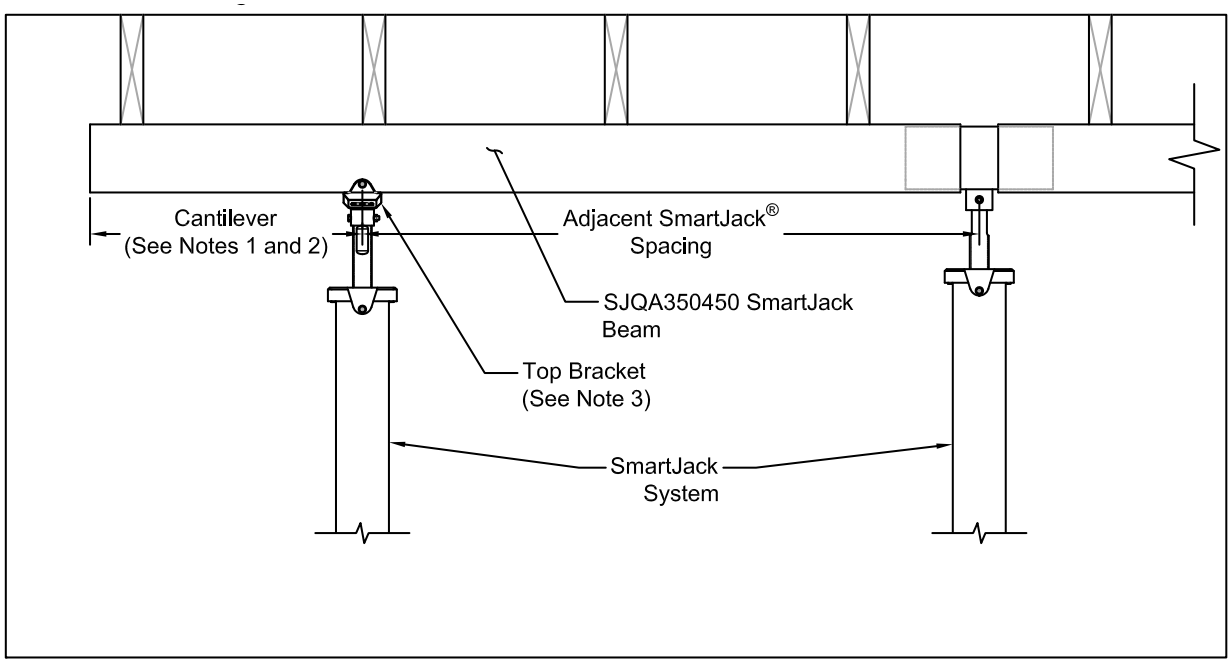

(1) Beam should extend past the centerline of the SmartJack system at least as far as the edge of the top bracket.

(2) The new supplemental beam may be cantilevered over the end support by a distance of 30 inches or by a distance of approximately 50% of the adjacent SmartJack spacing, whichever is less. Each beam segment must be supported by at least two SmartJack posts.

(3) Support of cantilevers requires use of top brackets that allow the supplemental beam to be continuous over the support. Splice brackets shall not be used to support cantilevered beams.

Step 1

Determine the load which will be supported by the new supplemental beam in pounds per linear foot:

Supplemental Beam Load (plf) = Existing Span (ft) × Total Floor Load (psf) ÷ 2

Note: Typical residential wood-framed construction may have an approximate floor load (15 psf dead load + 40 psf live load) = 55 psf total floor load.

Step 2

Determine the load on the interior SmartJack posts by multiplying the calculated supplemental beam load (plf) by the spacing of the SmartJack posts:

SmartJack Load (lb) = Supplemental Beam Load (plf) × SmartJack Spacing (ft)

Step 3

Verify that the calculated SmartJack load is less than the allowable capacity provided by the various system components, as well as the well-compacted crushed stone base and the bearing soils.

Note: Without a detailed soil investigation, typical installations should assume no more than 1,500 psf allowable soil bearing pressure. This would equate to an allowable soil capacity of 6,000 lb for a 2' square cast-in-place concrete footing, a 2' cube of well-compacted crushed stone, or the 16" x 36" plate footing. Extremely soft soils may prohibit the use of a crushed stone base or plate footing and require that a larger concrete footing be utilized.

© 2024 Supportworks®
All Rights Reserved

Step 4

Size the new supplemental beam by using the following table with both the SmartJack post spacing (ft) and the calculated supplemental beam load (plf). Choose a beam size that has an allowable load (plf) greater than the calculated supplemental beam load (plf) in step 1.

	Supplemental Beam Size	Supplemental Beam Allowable Load (plf)[1,2,3,4]					SmartJack Post Spacing
		4 ft	5 ft	6 ft	7 ft	8 ft	
Sawn Lumber[5]	(3) – 2 x 8	1,170	750	520	380	290	
	(3) – 2 x 10	1,760	1,120	780	570	440	
	(3) – 2 x 12	2,360	1,510	1,050	770	590	
	(1) – 4 x 6	850	550	380	280	210	
	(1) – 6 x 6	1,030	660	460	330	250	
SmartJack Beams	Tube 4.50 x 3.50 x 0.135	3,700	2,360	1,530	960	640	

(1) This table makes no evaluation of the components of the existing structure.

(2) Allowable loads in this table assume the supplemental beam is sufficiently restrained against lateral torsional buckling at an interval equal to or less than the SmartJack post spacing.

(3) This table assumes serviceability deflection limits of l/360 and l/240 for live and total load respectively. It assumes a LL/TL ratio equal to 40/55. Other serviceability limits may need to be considered based on project requirements.

(4) The new supplemental beam may be cantilevered over the end support by a distance of 30 inches or by a distance of approximately 50% of the adjacent SmartJack spacing, whichever is less. Each beam segment must be supported by at least two SmartJack posts.

(5) Sawn lumber is assumed to be Douglas Fir Larch - No. 2 or better.

Step 5

If the required supplemental beam size is undesirable, adjust spacing of the SmartJack posts and return to Step 2.

© 2024 Supportworks®
All Rights Reserved

CHAPTER 5

Polyurethane Foam & Resin

5.1 Summary Description

The PolyLevel® product line consists of polyurethane foams and resins for use in a wide range of geotechnical and structural applications. The more commonly used products are two-part urethanes that expand into rigid foam to fill voids, stabilize concrete, and lift concrete. These products are typically injected at the interface between the concrete slab and the subgrade soils (*Figure 5.1*). In some cases, PolyLevel is injected into the subgrade soils to fill voids and consolidate loose soils. Variations in the formulas of the two-part foams allow for uses in even more specific applications, as mentioned in *Section 5.2*. A single-part, nonexpanding PolyLevel resin is also available. This product can be injected deep into loose, sandy soil as a binder material, thereby stabilizing the soil against further consolidation/densification or preventing unconfined lateral flow. Vertical excavations may then be made, even in granular soils.

Polyurethane is not a new material. The chemistry of polyurethanes was discovered and patented in 1937 and has since been used extensively in a variety of products and materials. Polyurethanes are best known to the public in the form of flexible foams, e.g., upholstery cushions, mattresses, caulking, weather-stripping, vehicle door and dash moldings, tires for toddler bikes and wheelbarrows, etc. Spray foam insulation and foam filler within shells of watercraft are other examples most similar to the line of two-part PolyLevel products.

Polyurethane foam is created by the reaction of a diisocyanate (the "A" or "Iso" side) with a polyol (the "R" or "Resin" side) to form a urethane linkage. Diisocynates are organic compounds that are specifically manufactured to react with polyols. The A side varies little between polyurethanes of similar product lines or use categories. Polyols are simply alcohols with multiple hydroxyl groups. The polyols and other additives within the R side may vary significantly between products to control characteristics such as density and speed of reaction.

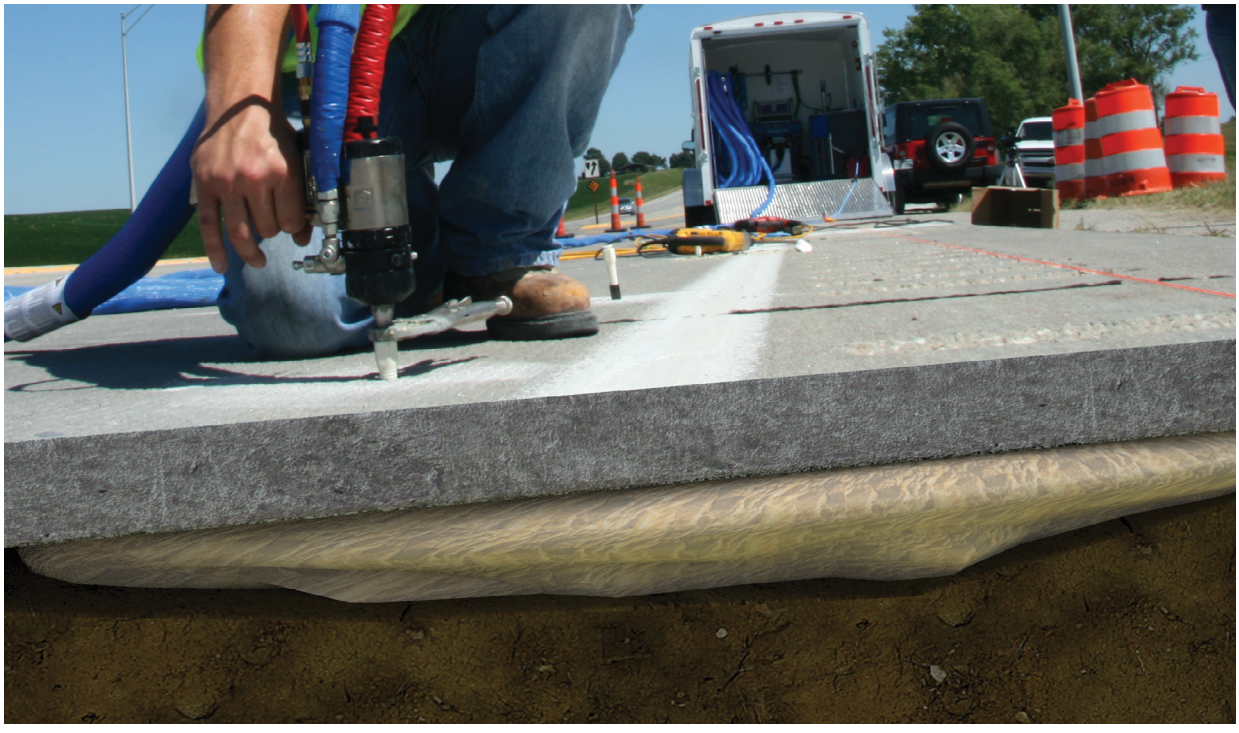

Figure 5.1 Rendering of PolyLevel foam injection beneath concrete pavement

© 2024 Supportworks®
All Rights Reserved

5.2 Applications

5.2.1 Residential

PolyLevel expanding foams are most often used beneath exterior concrete sidewalk and pavement sections for stabilization or releveling, but are also utilized for interior work and other specialty applications. PolyLevel foam is often considered as an alternative to mudjacking or removal and replacement.

Settlement of residential slabs is typically the result of consolidation of poorly compacted fill soils around foundations and within utility trenches, softening of weak native soils and fill due to increases in moisture content, and erosion or washout conditions resulting from poor drainage. Cracked slabs, faulting between slab sections, and/or other obvious downward vertical movement are typically the first observable symptoms of settlement from the surface, though voids may also be present below as rigid slabs can span between support points.

When voids are present, using inert, hydrophobic PolyLevel expanding foam allows for undersealing of the region, minimizing the likelihood of any further washout and acting to again provide uniform support to the bridged concrete. When slabs have settled, with or without the presence of voids, foam can be injected to create lift without adding significant weight to the underlying soil.

PolyLevel foam is used to stabilize, lift, and relevel sidewalks (*Figure 5.2*), patios, driveways (*Figure 5.3* and *Figure 5.4*), garages slabs, and slab-on-grade concrete floors. Concrete decks surrounding swimming pools (*Figure 5.5*) can also settle over time due to localized erosion of subgrade soils or consolidation of poorly compacted fill and backfill. These repairs can often be completed in a matter of hours with immediate results, less mess, and no "wait time" for typical, continued use of the areas. When the work is done, all the concrete sections will still match and not take on the appearance of a checkerboard, as is the case with typical removal and replacement.

Figure 5.2 PolyLevel foam injected to relevel faulted sidewalk sections

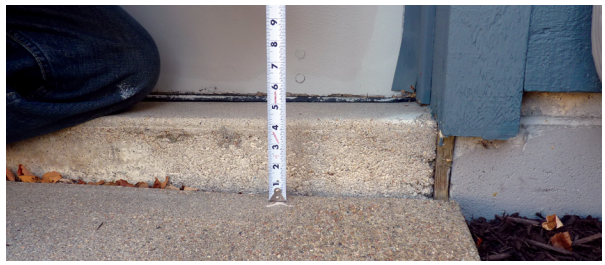

Figure 5.3 Before: Driveway settled up to 4 inches relative to garage slab

Figure 5.4 After: Driveway lifted back to near original elevation

© 2024 Supportworks®
All Rights Reserved

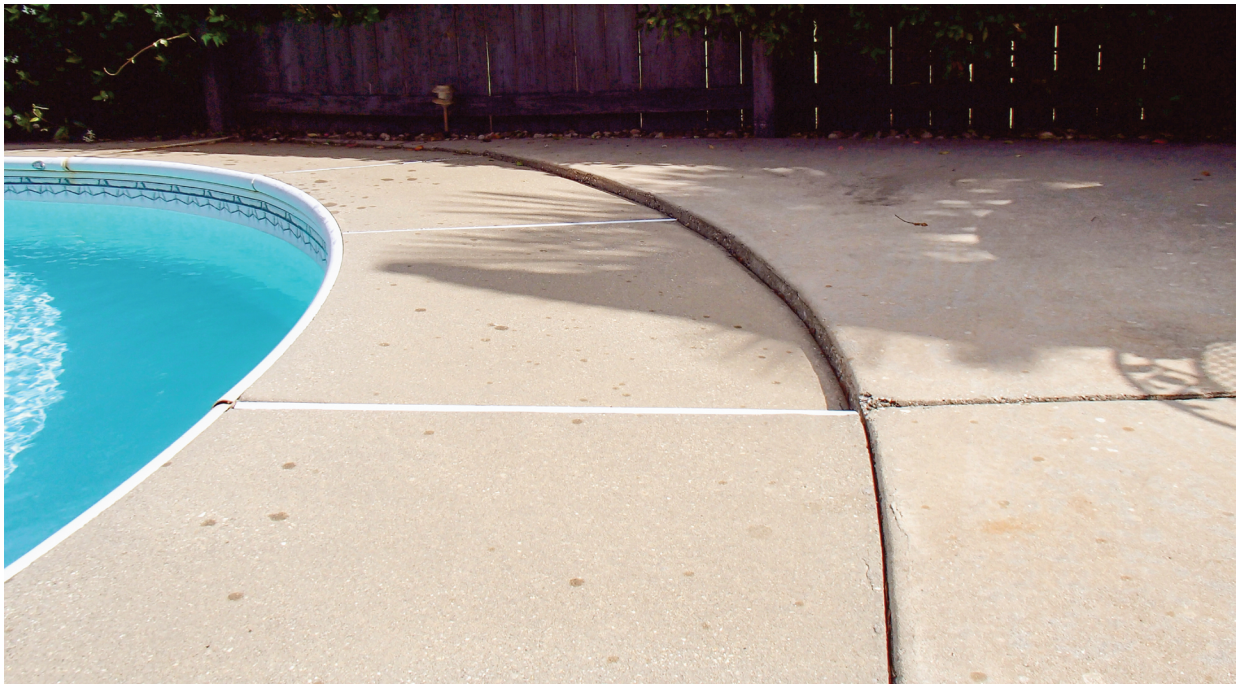

Figure 5.5 Pool deck slab settlement

5.2.2 Commercial

Commercial/industrial applications include similar types of projects as residential, but also include areas and facilities with heavier use pavements. More common commercial PolyLevel foam applications include resupport of concrete pavement at and around loading docks, and concrete floor slabs within warehouses (*Figure 5.6*), plants and manufacturing facilities. Heavy wheel loads from semi-trucks and from fork trucks can overstress subgrade soils and lead to pavement/slab cracking, settlement, and faulted sections.

Settled slab-on-grade office and retail space are generally ideal candidates for stabilization or releveling with PolyLevel. The installation process is clean with small slab penetrations (compared to mudjacking) and work can typically be completed after business hours and then reopened to cause little to no disruption to normal operations.

Figure 5.6 PolyLevel stabilizes warehouse floor slab

© 2024 Supportworks®
All Rights Reserved

5.2.3 Roadwork

There are several applications where PolyLevel foam injections can be used for roadway maintenance and repair. This includes repair of general slab settlement, repair and remediation of bridge approach slab settlement, and undersealing and stabilization.

General slab settlement describes differential movement between slab sections or lengths of pavement along a concrete road, highway, or interstate to the extent that ride quality is compromised. Slab faulting describes specific conditions where abrupt differential vertical movement is observed at joints or cracks between adjacent slab sections. Slab movement can be the result of consolidation of utility trench backfill, consolidation of deeper fill embankments, consolidation of native soils beneath the weight of fill soils, erosion, poor subgrade preparation, and subgrade deterioration due to traffic loading and seasonal wet/dry and freeze/thaw cycles.

Signs of general slab settlement include slab cracking, sagging of multiple adjacent slabs, and differential movement at longitudinal joints (lane-to-lane or lane-to-shoulder) or transverse joints perpendicular to the direction of traffic (more common). In all instances, PolyLevel foam can be used to lift settled concrete, provide a stabilized base, and reduce road roughness. PolyLevel has also been used successfully to produce similar results at airports along runways and taxiways, and at railway crossings where rails are embedded within precast slab sections (*Figure 5.7*).

Figure 5.7 Commuter train track settled up to 2 inches at roadway intersection

© 2024 Supportworks®
All Rights Reserved

Bridge approach slab settlement occurs over time to at least some degree at most bridge structures. This settlement is so common that it is widely referred to by consultants and Department of Transportation representatives as "the bump before the bridge." The bridge itself is typically supported on a deep foundation where little settlement is anticipated. The issue arises due to conditions of the embankment approach construction. Where deep fill is placed, lower layers of fill can be compressed by the weight of the upper fill layers. More common, however, is the consolidation of the native soil beneath the weight of the overlying fill. As the embankment consolidates, supported slabs settle relative to the stable bridge abutments, which can result in either faulted slab sections or dips and sags in the pavement leading up to the abutments. More recent bridge construction details may include structural approach slabs supported on one end by the bridge abutment and on the other end by either a footing (sleeper slab) or a grade beam that incorporates deep foundation elements. These details theoretically serve to soften abrupt movements but generally only move problematic pavement settlement farther from the structure.

PolyLevel foam provides a fast, noninvasive, lightweight option to fill voids and lift slabs without further burdening the embankment soils. Work can often be scheduled to limit impact to commuters, or put another way, cause less inconvenience to the public. It is common to stabilize and lift concrete road and bridge approach sections and then open those areas back up to traffic at the end of the work period.

Undersealing and joint stabilization is often completed prior to resurfacing or dowel bar retrofitting. PolyLevel foam can be used to recreate uniform bearing support for roads by filling voids that exist between the slab and the subgrade, thereby reducing the likelihood of soil/subgrade pumping, faulting and slab cracking. In addition, it also acts to seal cracks and joints from the underside of the slab to minimize water intrusion, again reducing the risk of future issues developing. This work can often be performed in one lane while maintaining traffic flow in adjacent lanes (*Figure 5.8*).

Figure 5.8 PolyLevel injection while maintaining an open lane for traffic

© 2024 Supportworks®
All Rights Reserved

5.2.4 Pipeline & Trenching Applications

Pipeline construction along sloping terrain often includes features to prevent surface water infiltration from flowing longitudinally along the pipe and eroding the backfill. Historically, this has been done by pouring concrete collars or stacking sandbags at intervals within the confines of the trench. Steeper terrain generally requires more of these "trench breakers". Concrete and sandbag breakers are labor intensive and often dangerous to construct without proper shoring of the excavations (*Figure 5.9*). These materials are also difficult to deliver to remote locations.

PolyLevel trench breakers are an excellent alternative to the traditional methods involving concrete or sandbags. PolyLevel foam breakers form perfectly to whatever contour is encountered, including under and around the pipeline, as well as along the trench walls. Further, they can be installed from above the trench, eliminating safety concerns and the need for shoring (*Figure 5.10*). Each breaker can also generally be completed within 5 to 10 minutes, allowing backfilling operations to follow without delay.

Figure 5.9 Sandbag trench breaker for pipeline

Figure 5.10 Placement of polyurethane foam trench breaks

© 2024 Supportworks®
All Rights Reserved

5.2.5 Soil Stabilization

The single-part, nonexpanding PolyLevel soil stabilizer can be injected into loose granular soils to serve as a binder. After injection, the resin hardens to create a material with characteristics similar to that of sandstone.

PolyLevel soil stabilizer is a liquid polyurethane system that uses the residual moisture in the soil to aid in the cure reaction. This makes the product an excellent choice to provide a long-lasting, rigid stabilization of soils that can undergo repeated wet/dry cycles. PolyLevel soil stabilizer ultimately provides a solution that is more permanent and reliable than other injectable products, such as sodium silicate chemical grouts. Lastly, PolyLevel soil stabilizer is environmentally inert and does not contaminate soil or groundwater.

5.3 Benefits

- **Lightweight and High Capacity** – The standard PolyLevel foam formulations are designed to meet the needs of their respective applications. PolyLevel foam for road and highway repair has a nominal density of 4 pounds per cubic foot (pcf), and nominal strength values exceeding most project requirements, including the 60 psi compressive strength performance specification set by AASHTO. Custom PolyLevel foam blends can also be formulated to meet any relevant state and municipality material specifications or provisions when unique requirements are in place.

- **Accurate Lift** – Lifting takes place as a result of a controlled chemical reaction under the slab, compared to mudjacking which relies on hydraulic pressure being contained under the slab. When mudjacking slurry "blows out", additional lift is not possible. PolyLevel injection allows for a controlled lift that can be accurately monitored with survey equipment (*Figure 5.11*), string lines (*Figure 5.12*), or other measuring equipment.

Figure 5.11 Survey equipment used to monitor rail lift from PolyLevel injection

Figure 5.12 Monitoring pavement lift with string lines

© 2024 Supportworks®
All Rights Reserved

- **Waterproof** – PolyLevel foam is a closed-cell polyurethane which exhibits minimal long-term water absorption, will not wash out from under the slab, and is not damaged by freeze/thaw cycles. In addition, PolyLevel foam is a hydrophobic system capable of reacting in the presence of water, allowing it to be used to underseal slabs and mitigate a variety of water intrusion issues even when free water is present. PolyLevel soil stabilizer is a hydrophilic system that will actually use moisture in the soils to assist in its chemical reaction, but remains waterproof once fully cured.

- **Safe for the Environment** – PolyLevel foam restores concrete that may otherwise need to be removed and replaced. Cured foam will not degrade under the slab nor leach chemicals into the soil or groundwater.

- **Noninvasive** – PolyLevel installation equipment allows placement in tight and limited access areas. There is less mess than mudjacking and smaller holes required for installation. The liquid PolyLevel components are delivered beneath the slab through drilled ⅜-inch to ¾-inch holes.

- **Fast Cure Time** – PolyLevel foam cures quickly to typically allow treated areas to be reopened for use immediately after holes are patched. Cure time depends upon the placed thickness of the material, however, it is generally considered to be 90 percent cured within 30 minutes. Using the PolyLevel foam solution will dramatically decrease lane downtime and inconvenience to commuters on roadway projects.

5.4 Products

The standard PolyLevel product line includes one (1) single-part nonexpanding resin and three (3) two-part expanding foams. Brief general descriptions and product uses are included below. Additional product descriptions and properties are included on the Technical Information sheets in *Appendix 5A*.

- **PolyLevel® Soil Stabilizer (PL100SS)** - Single-part stabilizer for loose granular soils.

- **PolyLevel® 250 Hydrophobic (PL250H)** – Nominal 2.5 pcf density in a free-rise state. Hydrophobic material allows for use in applications where water is likely present beneath the slabs or pavement. Used mainly in residential and low load applications.

- **PolyLevel® 400 Hydrophobic (PL400H)** - Nominal 4 pcf density in a free-rise state. Hydrophobic material allows for use in applications where water is likely present beneath the slabs or pavement. Used in commercial, roadwork, and moderate to high load applications.

- **PolyLevel® Trench Breaker (PL220TB)** – Used as a ditch block or trench break material due to its low exothermic reaction temperature and quick dissipation of heat.

Model specifications for PL100SS, PL250H and PL400H are available at *www.OnStableGround.com*.

© 2024 Supportworks®
All Rights Reserved

5.5 Installation Process

5.5.1 Equipment

Figure 5.13 Truck-mounted installation unit

PolyLevel foam is installed with custom-built installation rigs available as truck-mounted (*Figure 5.13*) or trailer units (*Figure 5.14*). The basic components of the system include material storage tanks, a generator, an air compressor, pumps, a proportioner, and applicator(s)/gun(s). The proportioner includes a material heater, pressure regulator, stroke counter, and insulated and heated hoses. This ensures that the two parts are delivered to the applicator at a consistent pressure and temperature.

Figure 5.14 Enclosed trailer unit

© 2024 Supportworks®
All Rights Reserved

5.5.2 Installation Steps

The following installation steps provide a broad overview of PL250H and PL400H injection beneath a concrete slab or pavement. Intermediate steps, installation equipment and tools used, and considerations for unusual conditions or applications are not addressed.

Step 1

Access/application holes are drilled at strategic locations in the slab (*Figure 5.15*). In general, the holes are spaced 5 feet apart and 3 feet from the edges of the slab. Locations and spacing are often modified in the field to achieve the desired result.

Figure 5.15 Concrete slab drilled to provide access holes

Step 2

Injection ports are placed to seal the holes (*Figure 5.16*).

Figure 5.16 Injection port tightened with a socket wrench

Step 3

PolyLevel foam is injected to fill voids and allow for lifting (*Figure 5.17*). Lift may be monitored with survey equipment or string lines (refer back to *Figure 5.11* and *Figure 5.12*).

Figure 5.17 PolyLevel foam injected below the slab

Step 4

The injection ports are removed and the holes are patched with mortar mix, NexusPro® silicone joint sealant, or epoxy sealant (*Figure 5.18*).

Figure 5.18 Patching the injection hole

© 2024 Supportworks®
All Rights Reserved

5.6 Product Use Considerations

5.6.1 Installation Considerations

- PolyLevel expanding foam is intended for use beneath rigid concrete slabs and pavements with some spanning capability. The products should not be used beneath flexible pavements, e.g., asphalt, brick pavers, cobble stone, or highly deteriorated and broken concrete.

- When the A and R-side chemicals are combined, heat is produced relative to the amount of material mixed. Because closed-cell polyurethane is an effective insulator, the generated heat dissipates very slowly. Installing too much material at one time can start a fire, char or smoke the foam, and damage the integrity and effectiveness of the installation. To reduce the risk of heat damage:

    - Do not install foam in layers more than 5 inches thick; if subsequent lifts are needed, allow time for the injected foam to cool.

    - For large voids, install a predetermined amount of PolyLevel foam in every other injection port, then circle back around and install in the unfilled ports. After all ports are filled with the first layer, inject a second layer of foam using the same procedure. In most cases, this approach allows the PolyLevel to spread out and cool before more is added.

- Care should be taken by the installer not to overlift the slab or pavement sections. Should an overlift situation occur, slight adjustments may be possible in the elevations of adjacent sections. Otherwise, sections may have to be ground down or removed and replaced.

- Releveling slabs and pavements by injecting PolyLevel foam at the interface of the concrete and subgrade soils will not address deep-seated problems such as consolidation of fill or native soils, erosion, or sinkhole development. Experience has shown that deep consolidation of fill or native soils is often the cause of dips and sags in roadway sections and settlement of approach slabs. Deep injection of polyurethane in such applications, especially in clay soils, would provide little to no benefit. Rather, a practical and economical option is periodic releveling of the slabs as settlement occurs. Deep consolidation settlement generally slows and decreases in magnitude over time, so these periodic adjustments become less frequent (generally years between applications).

© 2024 Supportworks®
All Rights Reserved

5.6.2 Safety Considerations

- Both the A and R-side materials pose potential health risks such as irritation and sensitization to the respiratory system, skin, and eyes. Symptoms can become progressively worse or persistent with continued exposure. Remove sensitized people from potential exposure activities and always wear the proper Personal Protective Equipment (PPE) when working with PolyLevel.

- The chemical reaction generates off-gasses. Fortunately, most applications are outside or within large open and/or well-ventilated areas. The gasses are mostly contained under the slab and dissipate slowly causing no adverse effect. However, in poorly ventilated areas, the gasses can displace or reduce breathing air. Long term exposure can cause an allergic-like sensitivity to the product. It is imperative to avoid breathing fumes generated by polyurethane as it can cause serious issues with the lungs including allergy-like symptoms, asthma, and sensitization. To avoid negative side effects:

    - Wear a fitted, NIOSH-approved, P100 particulate filtering facepiece respirator or a supplied air respirator during any amount of exposure.

    - In poorly ventilated areas, provide mechanical ventilation and use a supplied air respirator. Remove anyone who is not wearing the appropriate respiratory protection.

    - Perform test sprays away from the work area. Although the spray should be observed, do not hover over the test foam for risk of inhaling fumes.

    - Do not break open an actively curing bulb of foam. This will dramatically increase off-gassing and risk of inhalation.

- The cured polyurethane foam that forms from the reaction of the A and R-side chemicals is considered inert and nonhazardous when properly installed. Avoid exposing cured polyurethane foam to extreme heat (>200°F) or open flame as it is a flammable substance.

- While seldom an issue, PolyLevel that is exposed to UV light should be covered to prevent degradation.

© 2024 Supportworks®
All Rights Reserved

CHAPTER 5

APPENDIX 5A

PolyLevel®

POLYLEVEL® 100 SOIL STABILIZER FOAM

TECHNICAL INFORMATION

Product Description

PolyLevel 100 Soil Stabilzer Foam is a low viscosity, polyurethane resin designed to penetrate and stabilize loose or sandy soil when medium or high strength is required. It migrates through loose soil and into voids and reacts with moisture in the soil to form a polymer cement/soil matrix of high strength and durability. PL100SS is resistant to most organic solvents, mild acids and bases, and micro-organisms. The polyurethane encapsulates loose soil, fills voids, and forms a solid, water-tight barrier.

Material Properties

Viscosity of Resin @ 77˚F:	25-50 cps
Viscosity of Activator (optional) @ 77˚F:	100-200 cps
Lbs. per gallon of Resin:	10.25 lbs.
Lbs. per gallon of Activator (optional):	8.5 lbs.
Shelf life of System:	6 months

Typical Reaction Properties

Gel Time @ 77˚F (0.0% Activator):	< 24 hours
Gel Time @ 77˚F (0.5% Activator):	12-16 minutes
Gel Time @ 77˚F (1.0% Activator):	8-11 minutes
Gel Time @ 77˚F (2.0% Activator):	6-7 minutes

© 2024 Supportworks®
All Rights Reserved

POLYLEVEL® 100 SOIL STABILIZER FOAM

APPLICATION INFORMATION

Storage & Use of Chemicals
Activator MUST be agitated (shaken) before use. Flush equipment with acetone before and after use to clean equipment and remove moisture. If work area temperatures are low, heat the product to 55°F – 85°F to improve product performance. Do not use open flame as a heat source. Store chemicals between 55°F – 85°F in a dry atmosphere. Shelf life is 6 months, in original, unopened factory containers, under normal storage conditions of 55° to 85° F. Do not store in direct sunlight. Keep drums tightly closed when not in use. Cured product may be disposed of without restriction. Excess liquid material should be mixed together with sand or other absorbent material and allowed to cure, then disposed of in the normal manner.

Safe Handling
Use caution in removing bungs from the container. Loosen the small bung first and let any built-up gas escape before completely removing. Avoid prolonged breathing of vapors. In case of chemical contact with eyes, flush with water for at least 15 minutes and get medical attention. For further information refer to "MDI-Based Polyurethane Foam Systems: Guidelines for Safe Handling and Disposal" publication AX-119 published by the Center for the Polyurethanes Industry 1300 Wilson Blvd, Suite 800, Arlington, VA 22209.

Caution
Polyurethane products manufactured or produced from this liquid system may present a serious fire hazard if improperly used or allowed to remain exposed or unprotected. The character and magnitude of any such hazard will depend on a broad range of factors which are controlled and influenced by the manufacturing and production process, by the mode of application or installation and by the function and usage of the particular product. ***Any flammability rating contained in this literature is not intended to reflect hazards presented by this or any other material under actual fire conditions. These ratings are used solely to measure and describe the product's response to heat and flame under controlled laboratory conditions.*** Each person, firm or corporation engaged in the manufacture, production, application, installation or use of any polyurethane product should carefully determine whether there is a potential fire hazard associated with such product in a specific usage, and utilize all appropriate precautionary and safety measures.

The information on our data sheets is to assist customers in determining whether our products are suitable for their applications. The customers must satisfy themselves as to the suitability for specific cases. Foundation Supportworks warrants only that the material shall meet its specifications; this warranty is in lieu of all other written or unwritten, expressed or implied warranties and Foundation Supportworks expressly disclaims any warranty of merchantability, fitness for a particular purpose, or freedom from patent infringement. Accordingly, buyer assumes all risks whatsoever as to the use of the material. Buyer's exclusive remedy as to any breach of warranty, negligence or other claim shall be limited to the purchase price of the material. Failure to adhere strictly to any recommended procedures shall relieve Foundation Supportworks of all liability with respect to the material or the use thereof.

© 2024 Supportworks®
All Rights Reserved

POLYLEVEL® 220 TRENCH BREAKER FOAM

TECHNICAL INFORMATION

Product Description

PolyLevel 220 Trench Breaker Foam is a water-blown, two-component, liquid polyurethane system that when combined, expands into a lightweight, rigid material used for exterior applications around utilities and pipelines. PolyLevel Trench Breaker is applied as a liquid and then expands approximately 35 times in volume in 15 to 20 seconds. The material exhibits low exothermic reaction temperature and therefore, can be placed in continuous, successive lifts without danger of charring or ignition.

Material Properties

Viscosity of Resin @ 77˚F:	800 cps
Viscosity of Isocyanate @ 77˚F:	225 cps
Lbs. per gallon of Resin:	9.3 lbs.
Lbs. per gallon of Isocyanate:	10.25 lbs.
Shelf life of System:	6 months

Typical Reaction Properties

Cream Time @ 77˚F:	4.5 seconds
Rise Time @ 77˚F:	17 seconds

Mix Ratio

By Weight of Resin:	91 parts
By Weight of Isocyanate:	100 parts
By Volume of Resin:	100 parts
By Volume of Isocyanate:	100 parts

Typical Physical Properties

Density (ASTM D1622):	2.2 pcf
Tensile Strength (ASTM D1623):	71 psi

© 2024 Supportworks®
All Rights Reserved

POLYLEVEL® 220 TRENCH BREAKER FOAM

APPLICATION INFORMATION

Equipment & Component Ratios

PolyLevel 220 Trench Breaker (PL-220TB) components should be mixed at a 1:1 ration by machines suited for two-component spray polyurethane systems. Consult with Foundation Supportworks for information regarding appropriate equipment and the processes recommended. Material and hose temperatures typically range between 95-130˚F and the spray pressures between 1,200 – 1,500 psi. The PL-220TB **R-side** component (**PL-220TBRD** – Drum / **PL-220TBRT** – Tote) is connected to the resin transfer pump while the **A-side** (**PLAD** - Drum / **PLAT** - Tote) should be connected to the isocyanate pumps.

Storage & Use of Chemicals

It is recommended that materials be stored out of direct sunlight. The temperature range of storage should fall between 60-90˚F. If chemicals are not properly pre-heated / heated, the isocyanate and resin may not mix appropriately and could cause processing problems. This is especially important as ambient temperatures become lower with seasonal changes. Prolonged exposure of the 'A' side to temperatures below 40˚F may cause the component to freeze. Keep drums tightly closed and always avoid A-side exposure to water in any form, including humidity. Contact with water will result in crystallization of some of the A- side material and could cause processing or equipment issues.

Safe Handling

Use caution with the removal of the bungs from the containers as there may be a buildup of pressure. Avoid breathing all vapors. If one comes into contact with the chemical, immediately rinse the area for 15 minutes and seek medical attention, if needed.

These guidelines provide important health and safety considerations associated with working with polyol resin blends. Polyurethane foams are often made using "systems," sometimes called "A-side" and "B-side," or "iso side" and "resin side." The hazards of the polyol resin are different from those of the diisocyanates, and different precautions should be taken when handling the individual components. This guide gives a brief summary of hazards that may be associated with the "resin side" of systems and addresses important issues to consider in the safe handling of these chemicals. (AX-228, 2013)

For further information, refer to **"Guidance for Working with MDI and Polymeric MDI: Things You Should Know"** from AX-205 *https://polyurethane.americanchemistry.com/Resources-and-Document-Library/11364.pdf* published by the Center for the Polyurethanes Industry (CPI), 700 2nd Street, NE, Washington, DC 20002

Caution

Polyurethane products manufactured or produced from this liquid system may present a serious fire hazard if improperly used or allowed to remain exposed or unprotected. The character and magnitude of any such hazard will depend on a broad range of factors which are controlled and influenced by the manufacturing and production process, by the mode of application or installation and by the function and usage of the particular product. ***Any flammability rating contained in this literature is not intended to reflect hazards presented by this or any other material under actual fire conditions. These ratings are used solely to measure and describe the product's response to heat and flame under controlled laboratory conditions.*** Each person, firm or corporation engaged in the manufacture, production, application, installation or use of any polyurethane product should carefully determine whether there is a potential fire hazard associated with such product in a specific usage, and utilize all appropriate precautionary and safety measures.

The information on our data sheets is to assist customers in determining whether our products are suitable for their applications. The customers must satisfy themselves as to the suitability for specific cases. Foundation Supportworks warrants only that the material shall meet its specifications; this warranty is in lieu of all other written or unwritten, expressed or implied warranties and Foundation Supportworks expressly disclaims any warranty of merchantability, fitness for a particular purpose, or freedom from patent infringement. Accordingly, buyer assumes all risks whatsoever as to the use of the material. Buyer's exclusive remedy as to any breach of warranty, negligence or other claim shall be limited to the purchase price of the material. Failure to adhere strictly to any recommended procedures shall relieve Foundation Supportworks of all liability with respect to the material or the use thereof.

© 2024 Supportworks®
All Rights Reserved

POLYLEVEL® 250 HYDROPHOBIC FAST FOAM

TECHNICAL INFORMATION

Product Description

PolyLevel 250 Hydrophobic Fast Foam is a non-invasive, water-blown, two-component, liquid polyurethane system that when combined, expands into a lightweight, rigid material used to fill voids, stabilize slabs, and lift concrete.

The resin is of low viscosity allowing for the system to be applied in varying temperatures. Application pressures are ideally between 1,200 and 1,500 psi.

Material Properties

Viscosity of Resin @ 77˚F:	520 cps
Viscosity of Isocyanate @ 77˚F:	220 cps
Lbs. per gallon of Resin:	9.01 lbs.
Lbs. per gallon of Isocyanate:	10.2 lbs.
Appearance of Resin (R-side):	Clear, yellow liquid
Appearance of Isocyanate (A-side):	Clear, brown liquid
Shelf life of System:	6 months

Typical Reaction Properties

Gel Time @ 77˚F:	3–4 seconds
Gel Time @ 100˚F:	2–3 seconds
Rise Time @ 77˚F:	24–26 seconds
Rise Time @ 100˚F:	11–14 seconds

Mix Ratio

By Weight of Resin:	92 parts
By Weight of Isocyanate:	108 parts
By Volume of Resin:	100 parts
By Volume of Isocyanate:	100 parts

Typical Physical Properties

Density (ASTM D1622):	2.4–2.6 pcf
Compressive Strength, (ASTM D1621):	34.6 psi
Water Absorption, (ASTM D2842):	0.56–0.63 pcf

© 2024 Supportworks®
All Rights Reserved

POLYLEVEL® 250 HYDROPHOBIC FAST FOAM

APPLICATION INFORMATION

Equipment & Component Ratios

PolyLevel 250 Hydrophobic Fast (PL-250HF) components should be mixed at a 1:1 ration by machines suited for two-component spray polyurethane systems. Consult with Foundation Supportworks for information regarding appropriate equipment and the processes recommended. Material and hose temperatures typically range between 95–130˚F and the spray pressures between 1,200–1,500 psi. The PL-250HF **R-side** component (**PL-250HFRD** – Drum / **PL-250HFRT** – Tote) is connected to the resin transfer pump while the **A-side** (**PLAD** - Drum / **PLAT** - Tote) should be connected to the isocyanate pumps.

Storage & Use of Chemicals

It is recommended that materials be stored out of direct sunlight. The temperature range of storage should fall between 60-90˚F. If chemicals are not properly pre-heated / heated, the isocyanate and resin may not mix appropriately and could cause processing problems. This is especially important as ambient temperatures become lower with seasonal changes. Prolonged exposure of the 'A' side to temperatures below 40˚F may cause the component to freeze. Keep drums tightly closed and always avoid A-side exposure to water in any form, including humidity. Contact with water will result in crystallization of some of the A- side material and could cause processing or equipment issues.

Safe Handling

Use caution with the removal of the bungs from the containers as there may be a buildup of pressure. Avoid breathing all vapors. If one comes into contact with the chemical, immediately rinse the area for 15 minutes and seek medical attention, if needed.

These guidelines provide important health and safety considerations associated with working with polyol resin blends. Polyurethane foams are often made using "systems," sometimes called "A-side" and "B-side," or "iso side" and "resin side." The hazards of the polyol resin are different from those of the diisocyanates, and different precautions should be taken when handling the individual components. This guide gives a brief summary of hazards that may be associated with the "resin side" of systems and addresses important issues to consider in the safe handling of these chemicals. (AX-228, 2013)

For further information, refer to **"Guidance for Working with MDI and Polymeric MDI: Things You Should Know"** from AX-205 *https://polyurethane.americanchemistry.com/Resources-and-Document-Library/11364.pdf* published by the Center for the Polyurethanes Industry (CPI), 700 2nd Street, NE, Washington, DC 20002

Caution

Polyurethane products manufactured or produced from this liquid system may present a serious fire hazard if improperly used or allowed to remain exposed or unprotected. The character and magnitude of any such hazard will depend on a broad range of factors which are controlled and influenced by the manufacturing and production process, by the mode of application or installation and by the function and usage of the particular product. ***Any flammability rating contained in this literature is not intended to reflect hazards presented by this or any other material under actual fire conditions. These ratings are used solely to measure and describe the product's response to heat and flame under controlled laboratory conditions.*** Each person, firm or corporation engaged in the manufacture, production, application, installation or use of any polyurethane product should carefully determine whether there is a potential fire hazard associated with such product in a specific usage, and utilize all appropriate precautionary and safety measures.

The information on our data sheets is to assist customers in determining whether our products are suitable for their applications. The customers must satisfy themselves as to the suitability for specific cases. Foundation Supportworks warrants only that the material shall meet its specifications; this warranty is in lieu of all other written or unwritten, expressed or implied warranties and Foundation Supportworks expressly disclaims any warranty of merchantability, fitness for a particular purpose, or freedom from patent infringement. Accordingly, buyer assumes all risks whatsoever as to the use of the material. Buyer's exclusive remedy as to any breach of warranty, negligence or other claim shall be limited to the purchase price of the material. Failure to adhere strictly to any recommended procedures shall relieve Foundation Supportworks of all liability with respect to the material or the use thereof.

© 2024 Supportworks®
All Rights Reserved

POLYLEVEL® 250 HYDROPHOBIC POLAR FOAM

TECHNICAL INFORMATION

Product Description

PolyLevel 250 Hydrophobic Polar Foam is a non-invasive, water-blown, two-component, liquid polyurethane system that when combined, expands into a lightweight, rigid material used to fill voids, stabilize slabs, and lift concrete.

The resin is of low viscosity allowing for the system to be applied in varying temperatures. Application pressures are ideally between 1,200 and 1,500 psi.

Material Properties

Viscosity of Resin @ 77˚F:	580-720 cps
Viscosity of Isocyanate @ 77˚F:	220 cps
Lbs. per gallon of Resin:	9.01 lbs.
Lbs. per gallon of Isocyanate:	10.2 lbs.
Appearance of Resin (R-side):	Clear, yellow liquid
Appearance of Isocyanate (A-side):	Clear, brown liquid
Shelf life of System:	6 months

Typical Reaction Properties

Gel Time @ 77˚F:	3–4 seconds
Gel Time @ 100˚F:	2–3 seconds
Rise Time @ 77˚F:	14–15 seconds
Rise Time @ 100˚F:	10–11 seconds

Mix Ratio

By Weight of Resin:	92 parts
By Weight of Isocyanate:	108 parts
By Volume of Resin:	100 parts
By Volume of Isocyanate:	100 parts

Typical Physical Properties

Density (ASTM D1622):	2.4–2.6 pcf
Compressive Strength, (ASTM D1621):	34.6 psi
Water Absorption, (ASTM D2842):	0.56–0.63 pcf

© 2024 Supportworks®
All Rights Reserved

POLYLEVEL® 250 HYDROPHOBIC POLAR FOAM

APPLICATION INFORMATION

Equipment & Component Ratios

PolyLevel 250 Hydrophobic Polar (PL-250HP) components should be mixed at a 1:1 ration by machines suited for two-component spray polyurethane systems. Consult with Foundation Supportworks for information regarding appropriate equipment and the processes recommended. Material and hose temperatures typically range between 95-130°F and the spray pressures between 1,200 – 1,500 psi. The PL-250HP **R-side** component (**PL-250HPRD** – Drum / **PL-250HPRT** – Tote) is connected to the resin transfer pump while the **A-side** (**PLAD** - Drum / **PLAT** - Tote) should be connected to the isocyanate pumps.

Storage & Use of Chemicals

It is recommended that materials be stored out of direct sunlight. The temperature range of storage should fall between 60-90°F. If chemicals are not properly pre-heated / heated, the isocyanate and resin may not mix appropriately and could cause processing problems. This is especially important as ambient temperatures become lower with seasonal changes. Prolonged exposure of the 'A' side to temperatures below 40°F may cause the component to freeze. Keep drums tightly closed and always avoid A-side exposure to water in any form, including humidity. Contact with water will result in crystallization of some of the A- side material and could cause processing or equipment issues.

Safe Handling

Use caution with the removal of the bungs from the containers as there may be a buildup of pressure. Avoid breathing all vapors. If one comes into contact with the chemical, immediately rinse the area for 15 minutes and seek medical attention, if needed.

These guidelines provide important health and safety considerations associated with working with polyol resin blends. Polyurethane foams are often made using "systems," sometimes called "A-side" and "B-side," or "iso side" and "resin side." The hazards of the polyol resin are different from those of the diisocyanates, and different precautions should be taken when handling the individual components. This guide gives a brief summary of hazards that may be associated with the "resin side" of systems and addresses important issues to consider in the safe handling of these chemicals. (AX-228, 2013)

For further information, refer to **"Guidance for Working with MDI and Polymeric MDI: Things You Should Know"** from AX-205 *https://polyurethane.americanchemistry.com/Resources-and-Document-Library/11364.pdf* published by the Center for the Polyurethanes Industry (CPI), 700 2nd Street, NE, Washington, DC 20002

Caution

Polyurethane products manufactured or produced from this liquid system may present a serious fire hazard if improperly used or allowed to remain exposed or unprotected. The character and magnitude of any such hazard will depend on a broad range of factors which are controlled and influenced by the manufacturing and production process, by the mode of application or installation and by the function and usage of the particular product. ***Any flammability rating contained in this literature is not intended to reflect hazards presented by this or any other material under actual fire conditions. These ratings are used solely to measure and describe the product's response to heat and flame under controlled laboratory conditions.*** Each person, firm or corporation engaged in the manufacture, production, application, installation or use of any polyurethane product should carefully determine whether there is a potential fire hazard associated with such product in a specific usage, and utilize all appropriate precautionary and safety measures.

The information on our data sheets is to assist customers in determining whether our products are suitable for their applications. The customers must satisfy themselves as to the suitability for specific cases. Foundation Supportworks warrants only that the material shall meet its specifications; this warranty is in lieu of all other written or unwritten, expressed or implied warranties and Foundation Supportworks expressly disclaims any warranty of merchantability, fitness for a particular purpose, or freedom from patent infringement. Accordingly, buyer assumes all risks whatsoever as to the use of the material. Buyer's exclusive remedy as to any breach of warranty, negligence or other claim shall be limited to the purchase price of the material. Failure to adhere strictly to any recommended procedures shall relieve Foundation Supportworks of all liability with respect to the material or the use thereof.

© 2024 Supportworks®
All Rights Reserved

POLYLEVEL® 250 HYDROPHOBIC STANDARD FOAM

TECHNICAL INFORMATION

Product Description

PolyLevel 250 Hydrophobic Standard Foam is a non-invasive, water-blown, two-component, liquid polyurethane system that when combined, expands into a lightweight, rigid material used to fill voids, stabilize slabs, and lift concrete.

The resin is of low viscosity allowing for the system to be applied in varying temperatures. Application pressures are ideally between 1,200 and 1,500 psi.

Material Properties

Viscosity of Resin @ 77˚F:	340 cps
Viscosity of Isocyanate @ 77˚F:	220 cps
Lbs. per gallon of Resin:	9.17 lbs.
Lbs. per gallon of Isocyanate:	10.2 lbs.

Appearance of Resin (R-side):	Clear, yellow liquid
Appearance of Isocyanate (A-side):	Clear, brown liquid

Shelf life of System:	6 months

Typical Reaction Properties

Cream Time @ 77˚F:	7.5–8.5 seconds
Cream Time @ 100˚F:	4–5 seconds
Rise Time @ 77˚F:	35–40 seconds
Rise Time @ 100˚F:	18–25 seconds

Mix Ratio

By Weight of Resin:	92 parts
By Weight of Isocyanate:	108 parts
By Volume of Resin:	100 parts
By Volume of Isocyanate:	100 parts

Typical Physical Properties

Density (ASTM D1622):	2.4–2.6 pcf
Compressive Strength, (ASTM D1621):	34.6 psi
Water Absorption, (ASTM D2842):	0.56–0.63 pcf

© 2024 Supportworks®
All Rights Reserved

POLYLEVEL® 250 HYDROPHOBIC STANDARD FOAM

APPLICATION INFORMATION

Equipment & Component Ratios

PolyLevel 250 Hydrophobic Standard (PL-250HS) components should be mixed at a 1:1 ration by machines suited for two-component spray polyurethane systems. Consult with Foundation Supportworks for information regarding appropriate equipment and the processes recommended. Material and hose temperatures typically range between 95-130°F and the spray pressures between 1,200 – 1,500 psi. The PL-250HS **R-side** component (**PL-250RSRD** – Drum / **PL-250HSRT** – Tote) is connected to the resin transfer pump while the **A-side** (**PLAD** - Drum / **PLAT** - Tote) should be connected to the isocyanate pumps.

Storage & Use of Chemicals

It is recommended that materials be stored out of direct sunlight. The temperature range of storage should fall between 60-90°F. If chemicals are not properly pre-heated / heated, the isocyanate and resin may not mix appropriately and could cause processing problems. This is especially important as ambient temperatures become lower with seasonal changes. Prolonged exposure of the 'A' side to temperatures below 40°F may cause the component to freeze. Keep drums tightly closed and always avoid A-side exposure to water in any form, including humidity. Contact with water will result in crystallization of some of the A- side material and could cause processing or equipment issues.

Safe Handling

Use caution with the removal of the bungs from the containers as there may be a buildup of pressure. Avoid breathing all vapors. If one comes into contact with the chemical, immediately rinse the area for 15 minutes and seek medical attention, if needed.

These guidelines provide important health and safety considerations associated with working with polyol resin blends. Polyurethane foams are often made using "systems," sometimes called "A-side" and "B-side," or "iso side" and "resin side." The hazards of the polyol resin are different from those of the diisocyanates, and different precautions should be taken when handling the individual components. This guide gives a brief summary of hazards that may be associated with the "resin side" of systems and addresses important issues to consider in the safe handling of these chemicals. (AX-228, 2013)

For further information, refer to **"Guidance for Working with MDI and Polymeric MDI: Things You Should Know"** from AX-205 *https://polyurethane.americanchemistry.com/Resources-and-Document-Library/11364.pdf* published by the Center for the Polyurethanes Industry (CPI), 700 2nd Street, NE, Washington, DC 20002

Caution

Polyurethane products manufactured or produced from this liquid system may present a serious fire hazard if improperly used or allowed to remain exposed or unprotected. The character and magnitude of any such hazard will depend on a broad range of factors which are controlled and influenced by the manufacturing and production process, by the mode of application or installation and by the function and usage of the particular product. ***Any flammability rating contained in this literature is not intended to reflect hazards presented by this or any other material under actual fire conditions. These ratings are used solely to measure and describe the product's response to heat and flame under controlled laboratory conditions.*** Each person, firm or corporation engaged in the manufacture, production, application, installation or use of any polyurethane product should carefully determine whether there is a potential fire hazard associated with such product in a specific usage, and utilize all appropriate precautionary and safety measures.

The information on our data sheets is to assist customers in determining whether our products are suitable for their applications. The customers must satisfy themselves as to the suitability for specific cases. Foundation Supportworks warrants only that the material shall meet its specifications; this warranty is in lieu of all other written or unwritten, expressed or implied warranties and Foundation Supportworks expressly disclaims any warranty of merchantability, fitness for a particular purpose, or freedom from patent infringement. Accordingly, buyer assumes all risks whatsoever as to the use of the material. Buyer's exclusive remedy as to any breach of warranty, negligence or other claim shall be limited to the purchase price of the material. Failure to adhere strictly to any recommended procedures shall relieve Foundation Supportworks of all liability with respect to the material or the use thereof.

© 2024 Supportworks®
All Rights Reserved

POLYLEVEL® 400 HYDROPHOBIC FOAM

TECHNICAL INFORMATION

Product Description

PolyLevel 400 Hydrophobic Foam is a non-invasive, water-blown, two-component, liquid polyurethane system that when combined, expands into a lightweight, rigid material used to fill voids, stabilize slabs, and lift concrete.

The resin is of low viscosity allowing for the system to be applied in varying temperatures. Application pressures are ideally between 1,200 and 1,500 psi.

Material Properties

Viscosity of Resin @ 77˚F:	350 cps
Viscosity of Isocyanate @ 77˚F:	220 cps
Lbs. per gallon of Resin:	9.17 lbs.
Lbs. per gallon of Isocyanate:	10.2 lbs.
Appearance of Resin (R-side):	Clear, yellow liquid
Appearance of Isocyanate (A-side):	Clear, brown liquid
Shelf life of System:	6 months

Typical Reaction Properties

Cream Time @ 77˚F:	8–10 seconds
Cream Time @ 100˚F:	4–5 seconds
Rise Time @ 77˚F:	35–40 seconds
Rise Time @ 100˚F:	20–24 seconds

Mix Ratio

By Weight of Resin:	91 parts
By Weight of Isocyanate:	109 parts
By Volume of Resin:	100 parts
By Volume of Isocyanate:	100 parts

Typical Physical Properties

Density (ASTM D1622):	3.9–4.1 pcf
Compressive Strength, (ASTM D1621):	62–67 psi
Tensile Strength (ASTM 1623):	250–280 psi

© 2024 Supportworks®
All Rights Reserved

POLYLEVEL® 400 HYDROPHOBIC FOAM

APPLICATION INFORMATION

Equipment & Component Ratios
PolyLevel 400 Hydrophobic (PL-400H) components should be mixed at a 1:1 ration by machines suited for two-component spray polyurethane systems. Consult with Foundation Supportworks for information regarding appropriate equipment and the processes recommended. Material and hose temperatures typically range between 95-130˚F and the spray pressures between 1,200 – 1,500 psi. The PL-400H **R-side** component (**PL-400HRD** – Drum / **PL-400HRT** – Tote) is connected to the resin transfer pump while the **A-side** (**PLAD** - Drum / **PLAT** - Tote) should be connected to the isocyanate pumps.

Storage & Use of Chemicals
It is recommended that materials be stored out of direct sunlight. The temperature range of storage should fall between 60-90˚F. If chemicals are not properly pre-heated / heated, the isocyanate and resin may not mix appropriately and could cause processing problems. This is especially important as ambient temperatures become lower with seasonal changes. Prolonged exposure of the 'A' side to temperatures below 40˚F may cause the component to freeze. Keep drums tightly closed and always avoid A-side exposure to water in any form, including humidity. Contact with water will result in crystallization of some of the A- side material and could cause processing or equipment issues.

Safe Handling
Use caution with the removal of the bungs from the containers as there may be a buildup of pressure. Avoid breathing all vapors. If one comes into contact with the chemical, immediately rinse the area for 15 minutes and seek medical attention, if needed.

These guidelines provide important health and safety considerations associated with working with polyol resin blends. Polyurethane foams are often made using "systems," sometimes called "A-side" and "B-side," or "iso side" and "resin side." The hazards of the polyol resin are different from those of the diisocyanates, and different precautions should be taken when handling the individual components. This guide gives a brief summary of hazards that may be associated with the "resin side" of systems and addresses important issues to consider in the safe handling of these chemicals. (AX-228, 2013)

For further information, refer to **"Guidance for Working with MDI and Polymeric MDI: Things You Should Know"** from AX-205 *https://polyurethane.americanchemistry.com/Resources-and-Document-Library/11364.pdf* published by the Center for the Polyurethanes Industry (CPI), 700 2nd Street, NE, Washington, DC 20002

Caution
Polyurethane products manufactured or produced from this liquid system may present a serious fire hazard if improperly used or allowed to remain exposed or unprotected. The character and magnitude of any such hazard will depend on a broad range of factors which are controlled and influenced by the manufacturing and production process, by the mode of application or installation and by the function and usage of the particular product. ***Any flammability rating contained in this literature is not intended to reflect hazards presented by this or any other material under actual fire conditions. These ratings are used solely to measure and describe the product's response to heat and flame under controlled laboratory conditions.*** Each person, firm or corporation engaged in the manufacture, production, application, installation or use of any polyurethane product should carefully determine whether there is a potential fire hazard associated with such product in a specific usage, and utilize all appropriate precautionary and safety measures.

The information on our data sheets is to assist customers in determining whether our products are suitable for their applications. The customers must satisfy themselves as to the suitability for specific cases. Foundation Supportworks warrants only that the material shall meet its specifications; this warranty is in lieu of all other written or unwritten, expressed or implied warranties and Foundation Supportworks expressly disclaims any warranty of merchantability, fitness for a particular purpose, or freedom from patent infringement. Accordingly, buyer assumes all risks whatsoever as to the use of the material. Buyer's exclusive remedy as to any breach of warranty, negligence or other claim shall be limited to the purchase price of the material. Failure to adhere strictly to any recommended procedures shall relieve Foundation Supportworks of all liability with respect to the material or the use thereof.

© 2024 Supportworks®
All Rights Reserved

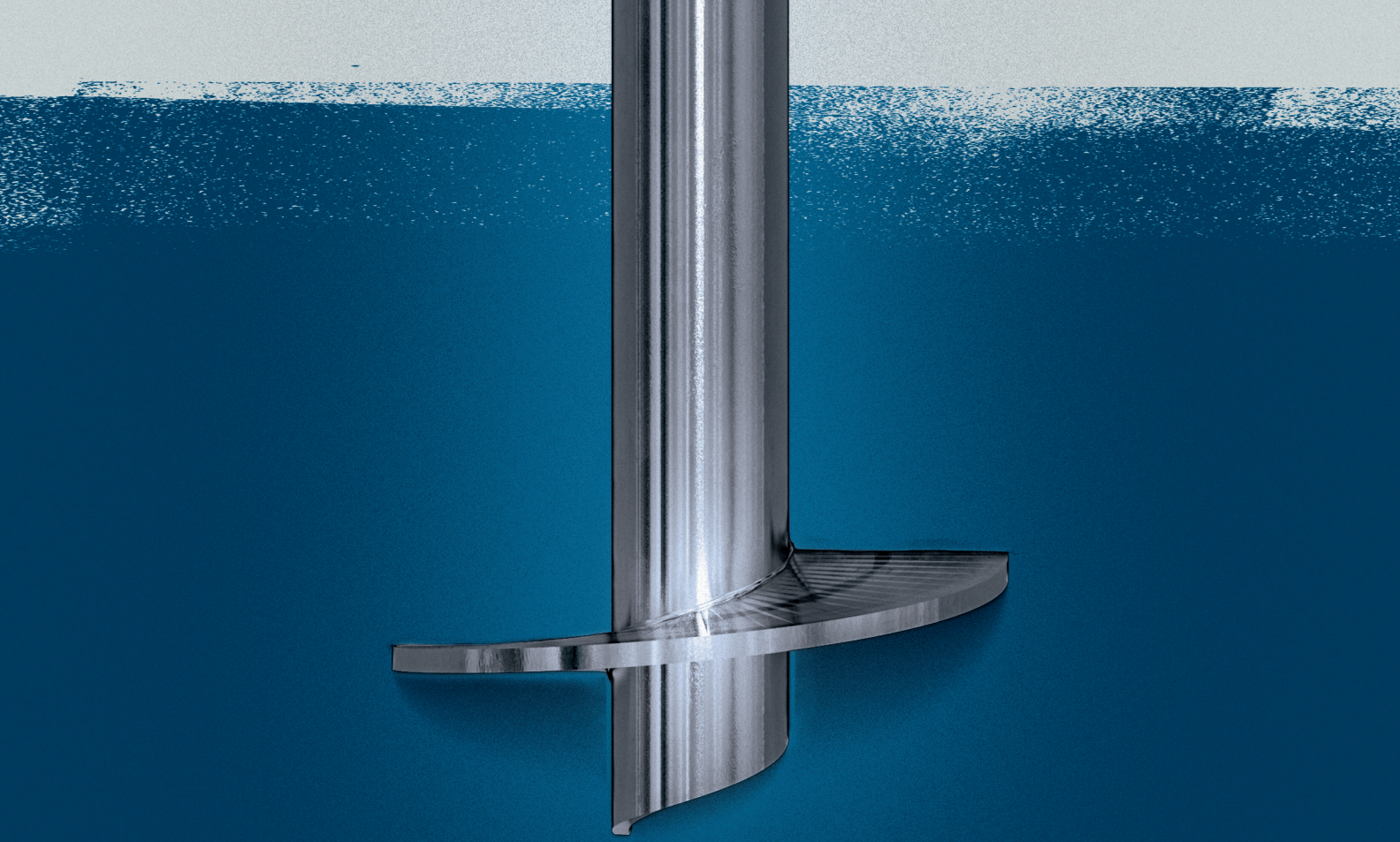

Foundation Supportworks®