EC-Motor Wiring Quick Start Guide

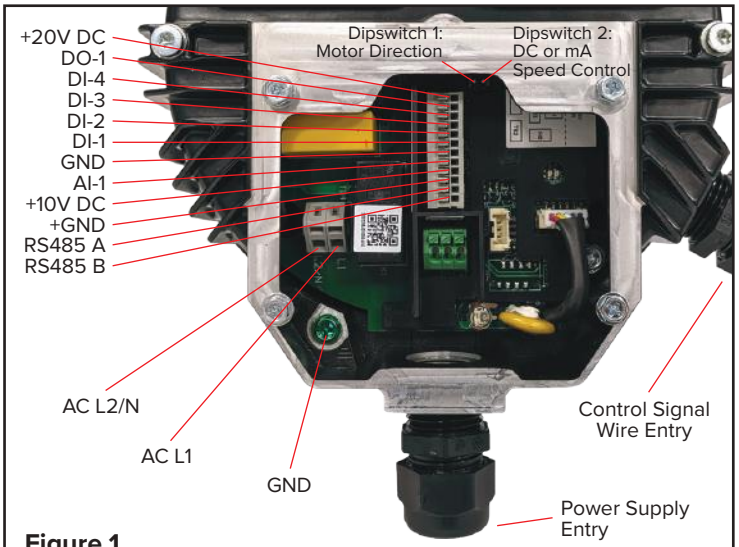

Figure 1

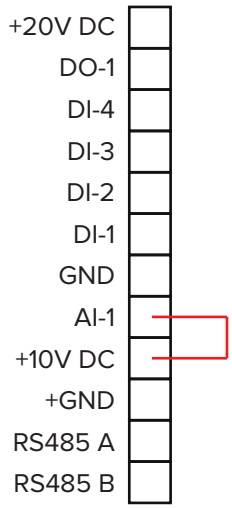

Full Speed

Factory default configuration

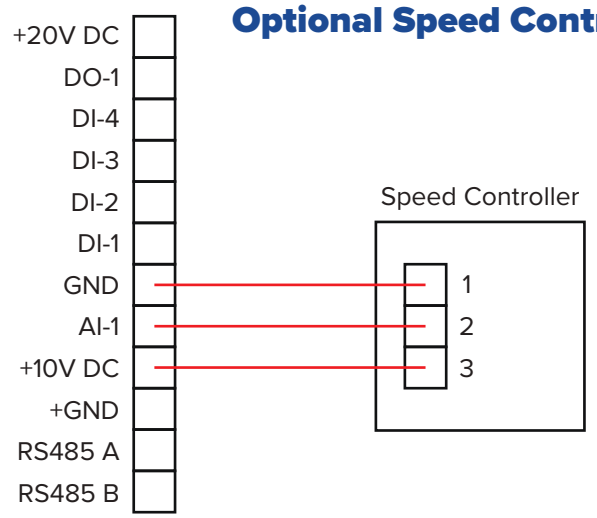

Optional Speed Control

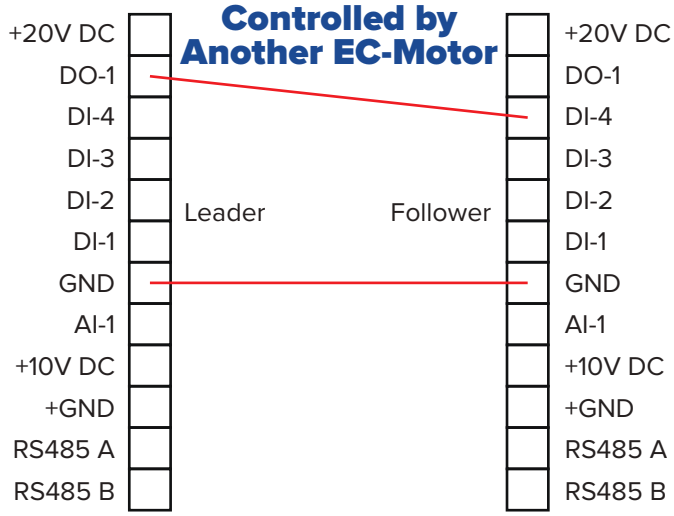

Controlled by Another EC-Motor

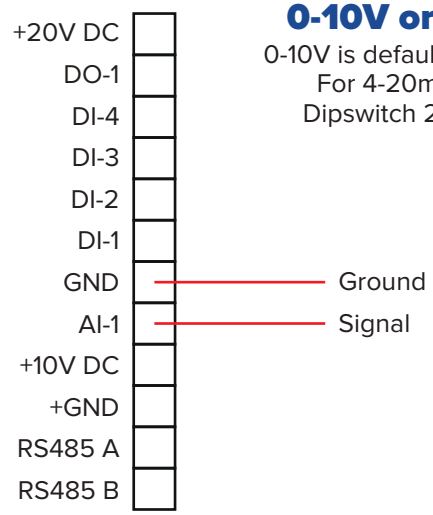

0-10V or 4-20mA

0-10V is default configuration.
For 4-20mA, change
Dipswitch 2 in Figure 1.

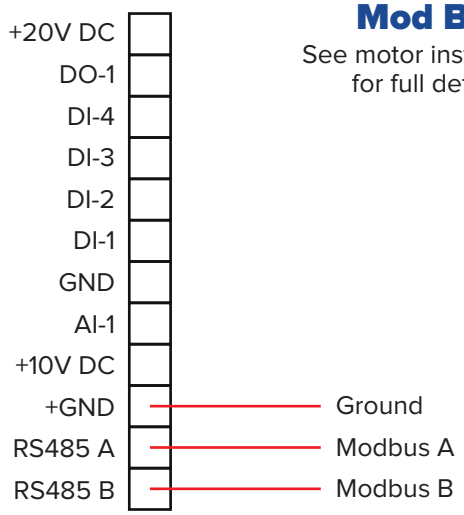

Mod Bus

See motor instructions
for full details.