EXELSIUS

PROCESS PARTNER FOR THE ELECTRONICS INDUSTRY

XUV METER

UV MEASUREMENT DEVICE

THE MEASUREMENT FOUNDATION OF RELIABLE UV PROCESS CONTROL

- AFFORDABLE PROFESSIONAL UV MEASUREMENT
- CALIBRATION PROCESS MANAGED BY EXELSIUS
- COMPATIBLE FOR BOTH UV LED AND UV ARC TECHNOLOGY

XUV METER

MEASURE, CONTROL, REPEAT AND TRUST YOUR UV PROCESS

CLOSED-LOOP CONTROL STARTS WITH MEASUREMENT

UV curing cannot be controlled if it is not measured.
The XUV Meter provides the real UV data needed to align machine settings with actual production conditions and ensure reliable closed-loop performance.

THE TOOL YOUR UV PROCESS DEPENDS ON

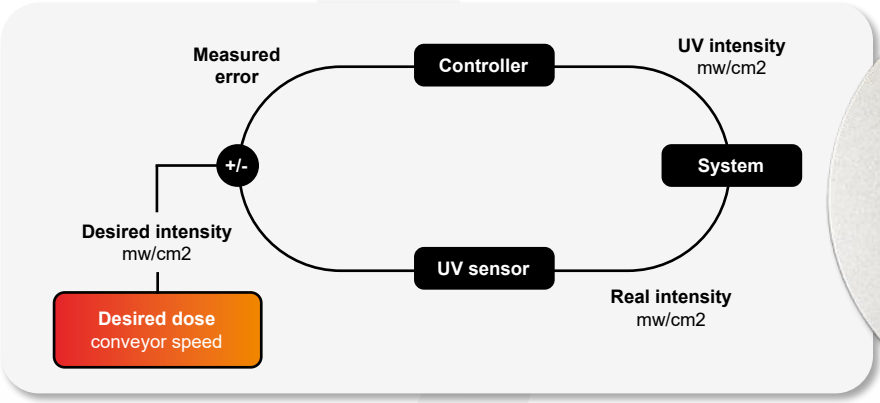

SECURE AND RELIABLE UV CLOSED-LOOP PERFORMANCE OVER TIME, BUILT ON METROLOGICAL CALIBRATION LOOP

Provided by EXELSIUS on request

ENSURE ACCURATE UV MEASUREMENT FOR YOUR WAVELENGHT RANGE

Two XUV Meter models for distinct UV wavelength ranges

UV LED 395nm OR **UV ARC & UV LED 365nm**

- UV-A λp = 395nm
- UV-V λp = 420nm
- UV-A λp = 365nm
- UV-B λp = 310nm
- UV-C λp = 254nm

WITH THE XUV METER, UV CURING MOVES FROM ASSUMPTION TO CERTAINTY

- SECURE THE UV CURING QUALITY
- REDUCE PROCESS VARIABILITY
- MAINTAIN STABLE PERFORMANCE OVER TIME

FOR MORE INFORMATION SCAN THE QR CODE AND CONTACT OUR SALES TEAM

EXELSIUS
Parc d'activités de l'Argile - 460 Avenue de la Quiéra - Allée E - Lot 2013
F-06370 MOUANS-SARTOUX - tel : +33(0)4 93 95 18 11 - contact@exelsius.com
www.exelsius.com