ARCH-LOC™
ADJUSTABLE BASE SHOE SYSTEM

FEATURE PRODUCTS

INNOVATIVE

ENGINEERED

Arch-Loc® Series	86
Arch-Loc® Series - 69 Series	88
Arch-Loc® Series - 86 Series	89
Accessories & Installation Application	90

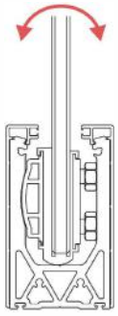

2° Tilt Adjustment

Quick & Easy Installation

Save Time and Money

Canadian Patent Number: 2962407
Engineered & Stamped - Canadian National Building Code (Per Province)

ARCH-LOC™ ADJUSTABLE BASE SHOE SYSTEM

1/2"-27/32" Glass

FEATURE PRODUCTS

FAST • EASY • ENGINEERED

Revolutionize Your Installations with our ARCH-LOC™ System. Our ARCH-LOC™ Base Rail Systems are **engineered** to deliver unmatched **ease of installation, superior precision, and reliable durability.** With **2° tilt adjustment** in each direction, achieved entirely from the inside of the balcony, this innovative system simplifies alignment and reduces installation time by up to threefold compared to traditional methods.

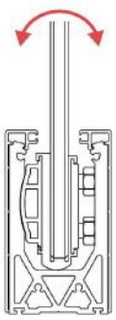

2° Tilt Adjustment

Quick & Easy Installation

Save Time and Money

Features and Benefits

Engineered: Engineered and Stamped to meet **National Building Code & Miami-Dade County NOA's.**

Glass Thickness: Suitable for glass from 1/2" - 27/32" (12mm-21.4 mm) thickness.

Available Length: 10FT & 20FT.

Premium Quality Materials: Constructed from high-strength, pure aluminum for exceptional durability.

Height From Ground: 1-1/2" above ground level.

Flexible Applications: Top-mounted, side-fixed, or recessed installations to suit diverse needs.

Faster Installations: Patented rotating pressure plate system ensures a smooth and efficient setup.

Canadian Patent: 2962407

ARCH-LOC™ FULL KIT DETAILS

STAMPED ENGINEERED STAMPED

Brushed Anodized Aluminum | Matte Black Anodized Aluminum | Brushed Stainless Steel | Polished Stainless Steel | Custom Finishes

Residential & Commercial Applications	69 Series - Top Mount 1/2" (12 mm)	69 Series - Side Mount 1/2" (12 mm)	86 Series - Top Mount 19/32" - 11/16" (15mm-17mm) 3/4" - 27/32" (19mm-21mm)
Base Shoe Type • Top Mount • Side Mount • Recessed Mount	Tilt Adjust		
Technical Drawing	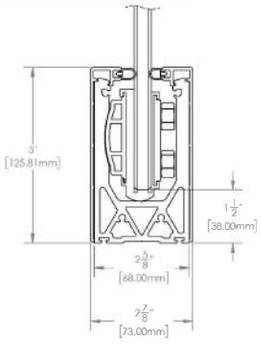	Stainless Steel 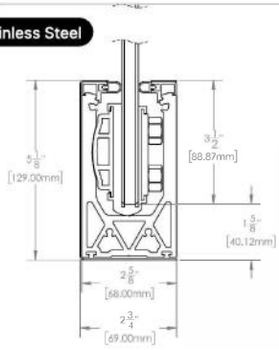	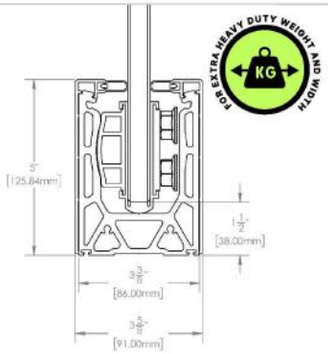

Kit Includes — FAST • EASY • ENGINEERED

Shoe Length	10 FT	20 FT	10 FT	10 FT
Glass Thickness	1/2" (12 mm)			19/32" - 11/16" (15mm-17mm) 3/4" - 27/32" (19mm-21mm)
Height From Ground	1 - 1/2"	1 - 1/2"	1 - 5/8"	1 - 1/2"
No. of Claddings	2 X 10 FT	4 X 10 FT	2 X 10 FT	2 X 10 FT
Glass Kits	10 pcs	20 pcs	10 pcs	10 pcs
Joining Pins	4 pcs	8 pcs	4 pcs	4 pcs
Stabilizing Washers	10 pcs	20 pcs	10 pcs	10 pcs
Gap Rubber	1 X 3.94"	2 X 3.94"	1 X 3.94"	1 X 3.94"
Flat Washers	10 pcs	20 pcs	10 pcs	10 pcs
End Caps	2	2	2	2

* For the most up-to-date product availability, visit our website.

69 Series – Components & Accessories

Suitable for glass from 3/8" - 1/2" (10mm-12 mm) thickness

Finishes & Specification

Brushed Anodized Aluminum | Matte Black Anodized Aluminum | Brushed Stainless Steel | Polished Stainless Steel | Custom Finishes

Canadian Patent Number: 2962407
Engineered and Stamped - National / Ontario Building Code

- Engineered and stamped **National and Ontario Building Codes & Miami-Dade County NOA's.**
- **Material:** High Strength Pure Aluminum Construction
- Suitable for glass **from 19/32" - 27/32" (15mm - 21.4 mm) thickness**
- Glass **height 1-1/2" (For Top Mount) & height 1-5/8" (For Side Mount)** above ground level

Mill Extrusion

ARCH69SMILL
ARCH69TMILL
Available in 10 ft & 20 ft length

ARCH6910TCLD
ARCH6920TCLD
Top Mount Cladding

ARCH6910SCLD
Side Mount Cladding (120" Length)

External & Internal Corner

ARCH6990CNTMIN
90° Top Fix Corner

ARCHC12
Glass Clamping Kit

ARCH69RS3 / ARCH69RS7
3Inches/7Inches Gap rubber

ARCH69SW
Stabilizer Washer

External & Internal Corner

ARCH6990CNTMEX
90° Top Fix External Corner

ARCHFWRENCH
Ratcheting Wrench

ARCHJP
Joining Pin

ARCHEC69
End Cap

ARCHDBLOCK
Drain Block

ARCHCWRENCH
Wrench

86 Series – Components & Accessories

Suitable for glass from 19/32" - 27/32" (15mm - 21.4 mm) thickness

Finishes & Specification

Brushed Anodized Aluminum | Brushed Stainless Steel | Matte Black Anodized Aluminum | Polished Stainless Steel | Custom Finishes

Canadian Patent Number: 2962407
Engineered and Stamped - National / Ontario Building Code

- Engineered and stamped as per **National and Ontario Building Codes & Miami-Dade County NOA's.**
- **Material:** High Strength Pure Aluminum Construction
- Suitable for glass **from 19/32" - 27/32" (15mm - 21.4 mm) thickness**
- Glass **height 1-1/2" (For Top Mount)** above ground level & **height 1-5/8" (For Side Mount)**

10FT / Top Mount | Kits

ARCH8610T1517
ARCH8610T1921
Available in 10 ft length

10FT / Mill Top Mount | Kits

ARCH86TMILL10
Mill Top Mount / Available in 10 ft length

ARCHC1517
Glass Clamp Kit
For 19/32" - 11/16" (15mm-17mm) thick Glass

ARCHC1921
Glass Clamp Kit
For 3/4" - 27/32" (19mm-21mm) thick Glass

ARCH8610CLD
ARCH8610CLD

ARCH86SCLD
Top Mount Cladding

ARCH86SCLD
Cover Kit for ARCH86

External & Internal Corner

ARCH8690CNTMEX
90° Top Fix External Corner

ARCHEC86
End Cap

ARCHCWRENCH
Wrench

ARCHFWRENCH
Ratcheting Wrench

ARCH69RS3
ARCH69RS7
3 & 7Inches Gap rubber

ARCHJP
Joining Pin

ARCH86SW
Stabilizer Washer

* For the most up-to-date product availability, visit our website.

Base Shoe Installation Application

2° Tilt Adjustment
Quick & Easy Installation
Save Time and Money

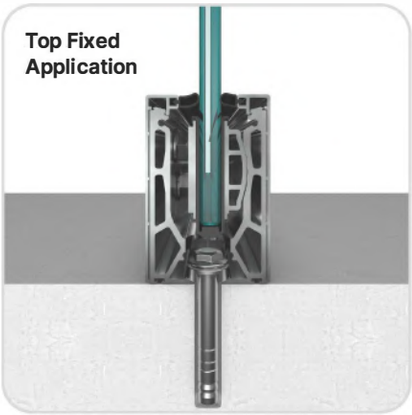

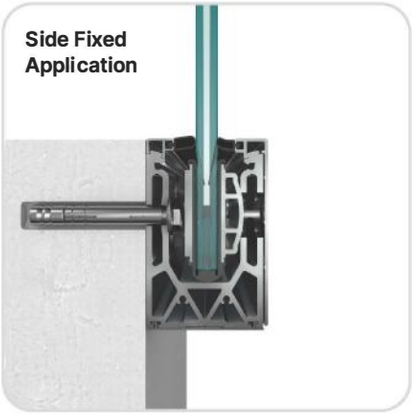

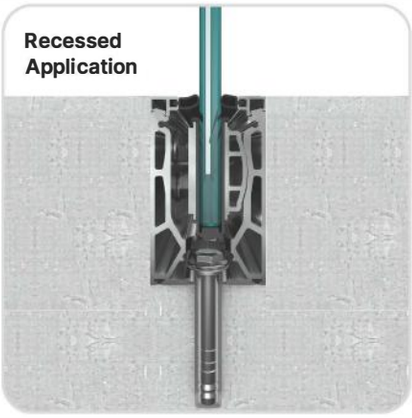

Available Mount Types

- **Top Fixed Application:** Ideal for surfaces like floors or beams, ensuring a clean and modern look.
- **Side Fixed Application:** Perfect for maximizing floor space, mounted directly to the side of the structure.
- **Recessed Application:** Provides a sleek, minimalistic finish by concealing the base shoe within the surface.

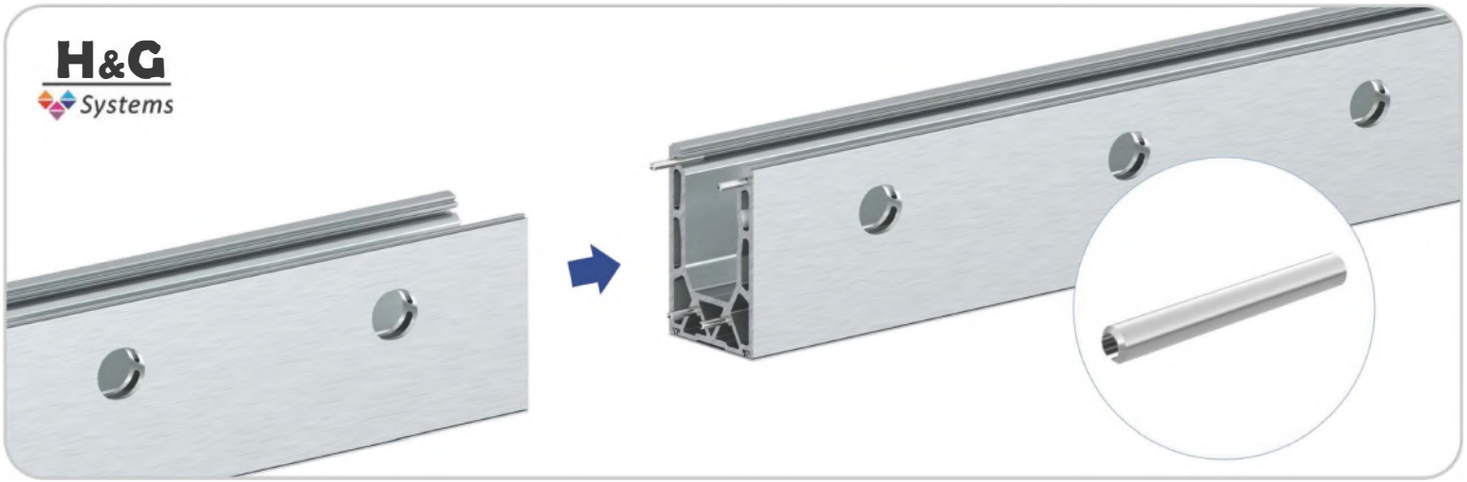

Joining Pins

Ensure seamless alignment and structural integrity with Joining Pins from the Arch-Loc Base Shoe System. These precision-engineered components securely connect base shoe segments, providing enhanced stability and a clean, continuous appearance. Built for durability and ease of installation, they are an essential part of achieving a flawless glass railing system.

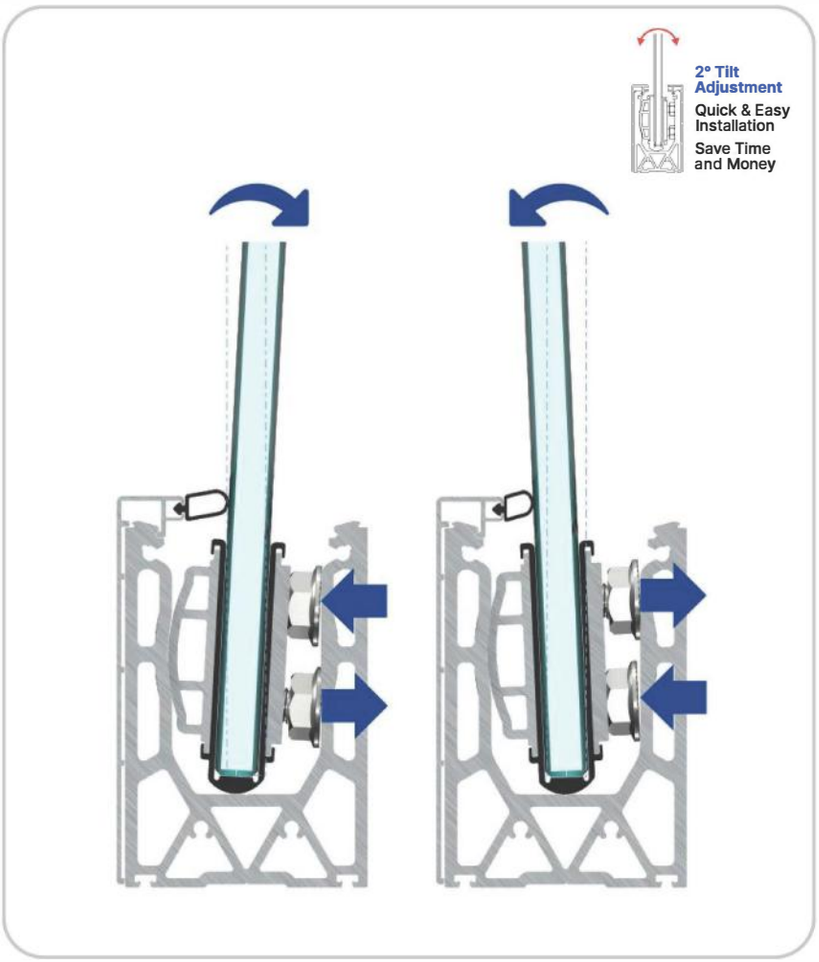

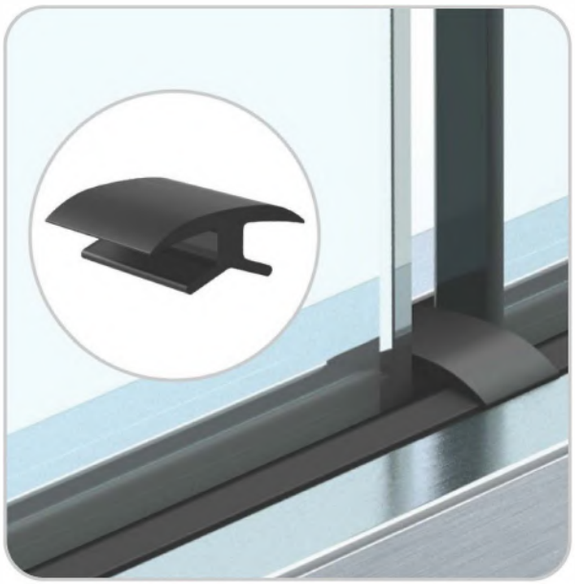

Clamp Adjustments - Rubber

Rubber in the Arch-Loc Base Shoe System provide protection from duct and debris and vibration damping. These durable rubber inserts ensure a secure fit while protecting the glass from damage, making installation easier and maintaining long-term stability in your glass railing system.

Titan Spigots

SQ/RD Top Mount Spigots	**94**	Side Mount Spigots	**97**	Connectors & Accessories	**100**
Arch Loc Series - Spigots	**95**	Edge Mount Spigots	**98**		
Stair Mount Spigots	**96**	Core Mount Spigots	**99**		

Engineered and Stamped - National / Ontario Building Code

Titan Series – SQ/RD Top Mount Spigots

Adjustable Railing Spigots

TI6SQADJ
TI8SQADJ
6" or 8" Height Adjustable Spigot - Square

TI6RD
6" Top Mount Spigot - Round

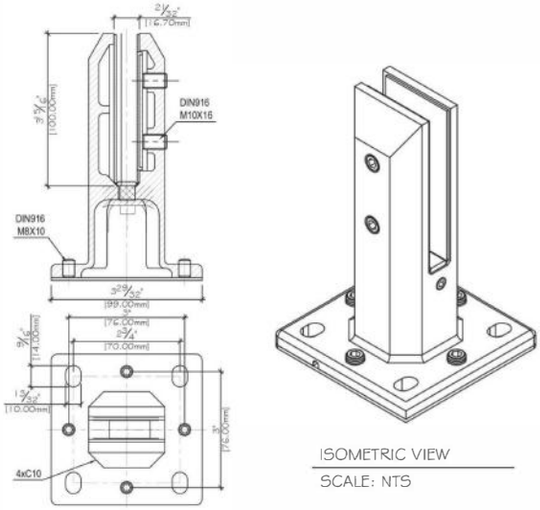

Key Features

The clean architectural lines create a unique facade providing a very cost efficient modern solution for structural glass railings.

- **Height Adjustable:** Extra 1/2" adjustment for perfect glass alignment.
- **Tilt Adjustment:** ±3° flexibility for angled or horizontal installations.
- **Premium Material:** Duplex 2205 stainless steel with SS316 cover for top strength and corrosion resistance.
- **Glass Compatibility:** Fits 12mm glass.
- Engineered and Stamped to meet **National Building Codes.**

ARCH-LOC™ Spigots

Brushed Anodized Aluminum

Matte Black Anodized Aluminum

Manufactured by H&G Systems

NEW

For 12-17.52mm Tempered Glass

ARCH6SQADJ
Arch-Loc Spigot

Glass Size	Gasket Sticker Colors
12mm	Yellow Gasket - L + Red Gasket - I
12.76mm	Yellow Gasket - L + White Gasket - I
13.52mm to 14.28mm	Green Gasket - L + Red Gasket - I
15mm	Green Gasket - L + White Gasket - I
16.76mm to 17.52mm	Purple Gasket - L + White Gasket - I

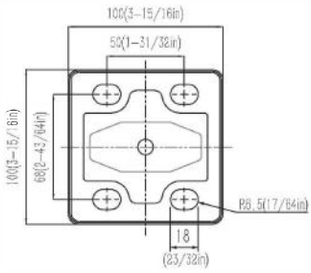

INSTALLATION METHODS

The clean architectural lines create a unique facade providing a very cost efficient modern solution for structural glass railings.

- **Canadian Patent No.**: 2,962,407
- **Height Adjustable**: Extra 1/2" adjustment for perfect glass alignment.
- **Tilt Adjustment**: ±30mm flexibility for angled or horizontal installations.
- **Premium Material**: Duplex 2205 stainless steel with SS316 cover for top strength and corrosion resistance.
- **Glass Compatibility**: Fits 12mm glass.
- Engineered and Stamped to meet **National Building Codes.**

Manufactured by H&G Systems

Titan Series – Stair Mount Spigots

Adjustable Railing Spigots

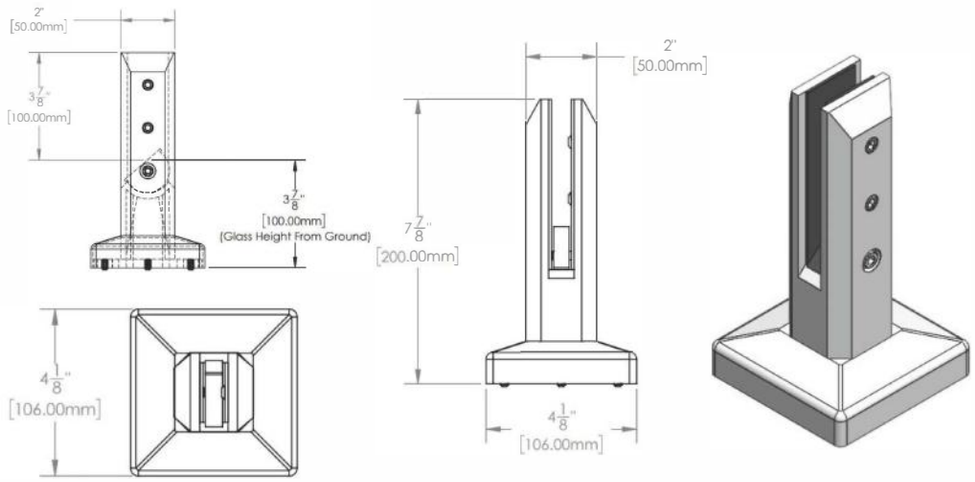

TI8SQSTAIR

8" Stair Mount Spigot - Square

Key Features

The clean architectural lines create a unique facade providing a very cost efficient modern solution for structural glass railings.

- **Height Adjustable**: Extra 1/2" adjustment for perfect glass alignment.
- **Tilt Adjustment**: ±3° flexibility for angled or horizontal installations.
- **Premium Material**: Duplex 2205 stainless steel with SS316 cover for top strength and corrosion resistance.
- **Glass Compatibility**: Fits 12mm glass.

Titan Series – Side Mount Spigots

Adjustable Railing Spigots

Architects Recommend

TISM
Side Mount Spigot

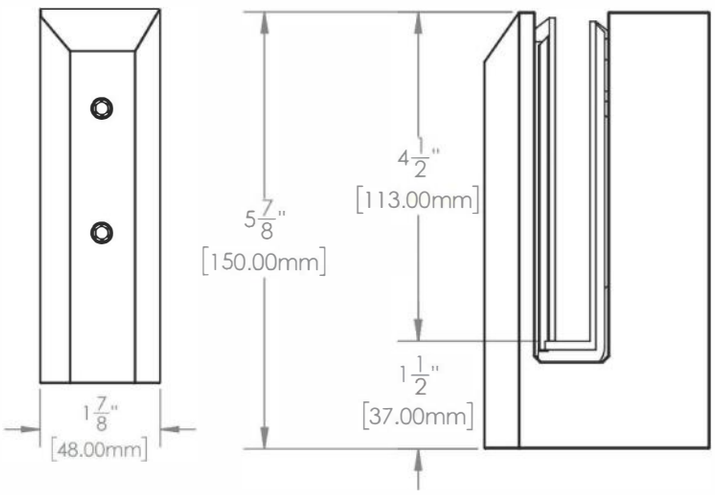

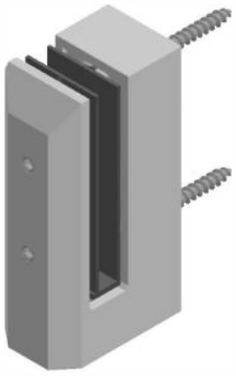

Key Features

The clean architectural lines create a unique facade providing a very cost efficient modern solution for structural glass railings.

- **Height Adjustable:** Extra 1/2" adjustment for perfect glass alignment.
- **Tilt Adjustment:** ±2° flexibility for angled or horizontal installations.
- **Premium Material:** Duplex 2205 stainless steel with SS316 cover for top strength and corrosion resistance.
- **Glass Compatibility:** Fits 12mm glass.
- Engineered and Stamped to meet **National Building Codes.**

Titan Series – Edge Mount Spigots

Adjustable Railing Spigots

TIEM
Edge Mount Spigot

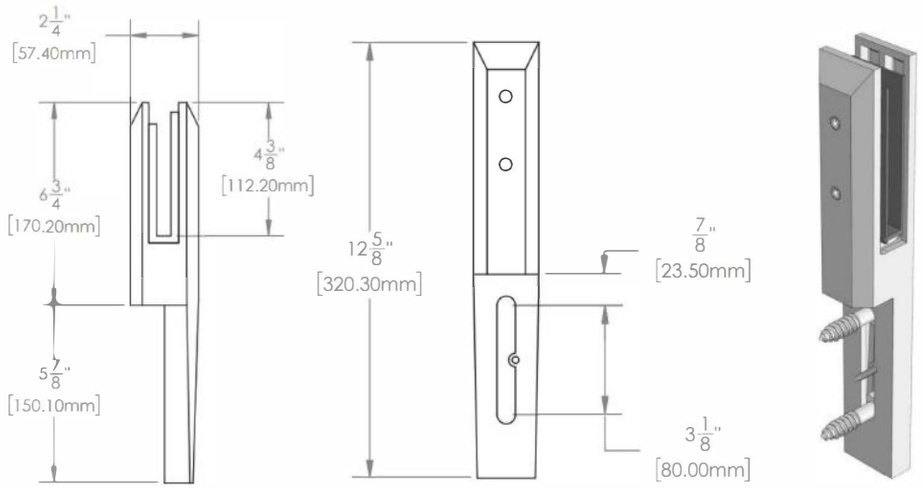

Key Features

The clean architectural lines create a unique facade providing a very cost efficient modern solution for structural glass railings.

- **Height Adjustable:** Extra 1/2" adjustment for perfect glass alignment.
- **Tilt Adjustment:** ±2° flexibility for angled or horizontal installations.
- **Premium Material:** Duplex 2205 stainless steel with SS316 cover for top strength and corrosion resistance.
- **Glass Compatibility:** Fits 12mm glass.
- Engineered and Stamped to meet **National Building Codes.**

Titan Series – Core Mount Spigots

Adjustable Railing Spigots

NEW

TICORE
Core Mount Spigot

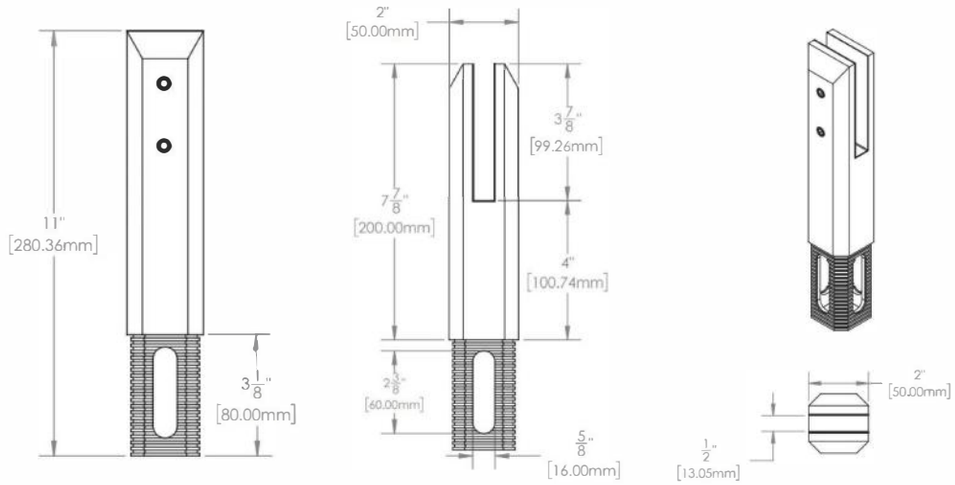

Key Features

The clean architectural lines create a unique facade providing a very cost efficient modern solution for structural glass railings.

- **Height Adjustable:** Extra 1/2" adjustment for perfect glass alignment.
- **Tilt Adjustment:** ±3° flexibility for angled or horizontal installations.
- **Premium Material:** Duplex 2205 stainless steel with SS316 cover for top strength and corrosion resistance.
- **Glass Compatibility:** Fits 12mm glass.

Titan Series Spigot Height Guide

Adjustable Railing Spigots

X = Glass Height from Floor

Type of Spigot	Dimension (X)
6" Spigot	2-1/2" (63.5mm)
8" Spigot	3-3/8" (84.35 mm)
Core Mount Spigot	4" (100.74mm)
Edge Mount Spigot	2-1/4" (58mm)
Side Mount Spigot	1-1/2 (37mm)

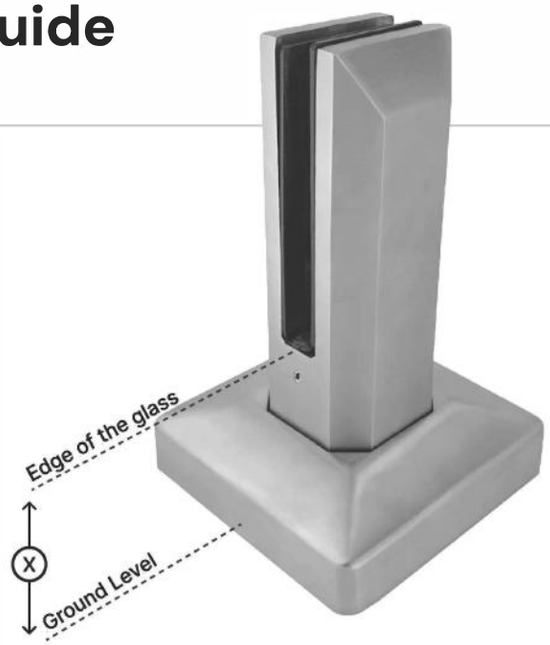

Titan Series – Connectors & Accessories

Slim

CON180S
180° Glass-to-Glass

Slim

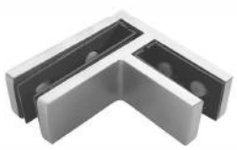

CON092S
90° Glass-to-Glass

Slim

DESIGNER'S APPROVED

CON90S
90° Wall-to-Glass

Slim

CON345S
Adjustable Glass-to-Glass

Slim

CON3WAY
Railing Connectors 3-Way
Glass-to-Glass

3" Length

WEDGEANCHOR -3/8X3
Wedge Anchor
3/8" Diameter

5" Length

WEDGEANCHOR -3/8X5
Wedge Anchor
3/8" Diameter

5" Length

LAGBOLT-3/8X5
Hex Lag Bolt

3-3/4" Length

HB12X3.75SS
Hanger Bolt for
Side Mount Spigots
- M12 X 3-3/4"
SS316

6" Lenght

HB12X6SS
Hanger Bolt for
Side Mount Spigots
- M12 X 6" SS316

Installation Socket
Side Mount Spigot

TISM-TOOL
Socket Tool

Thread Size: 3/8"-16 for a precise and secure fit

TISCREW
Set Screw

GGH LED Systems

Brushed Anodized Aluminum

Matte Black Anodized Aluminum

PRODUCT INFO

- Designed to fit into LED Pro-fit Spigot TI6SQADJ models
- Core in the base of spigot for simple light installation & replacement
- Integrated 1.5W RGB LED deck light set
- RGB, 16 light colors to choose from (speed & brightness adjustable)
- Sleek & modern design
- Life: 20,000 hours
- Waterproof rate of IP67
- 2205 Ultra Marine Grade Stainless Steel
- LED lighting can be changed without removing the spigot with a remote
  4 mode settings - Flash, strobe, fade & smooth

MOODLEDKIT

LED Kit for Titan Series Spigot

KIT INSTALLATION METHOD

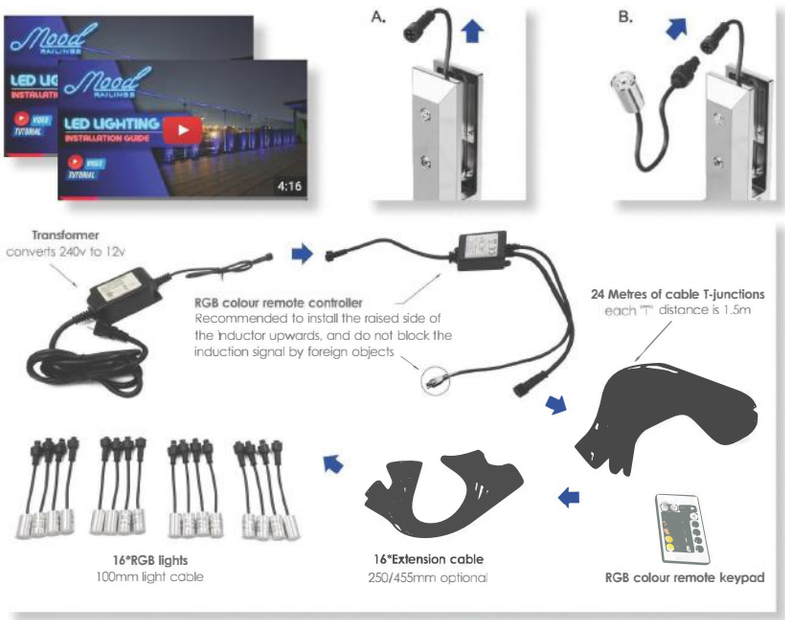

Standoffs

Arc Series - Standoffs **104**
Solid Standoffs - RD & SQ **106**
Solid Standoffs - Base **108**
Hanger Bolts & Threaded Rod **109**
Gaskets & Accessories **110**
Solid Standoff With Mounting Plate **111**

Arc Series – 4D Adjustable

Standoffs

Brushed Stainless | Matte Black | Satin Brass | More Finishes Online

FAST • EASY • ENGINEERED

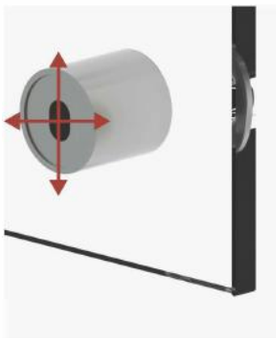

4D Base Adjustable

Oval shaped countersunk hole allow us to adjust Standoff base in four directions.

Height Adjustable

Standoff height can be adjusted for your panel projection needs.

Tilt Adjustable

Simple locking Angle with a standard Allen key - No special tools required.

Strong & Stable

Micro-adjustable for perfect glass alignment - Even after mounting.

Ultimate 4D Adjustable Standoffs

USE ONLY MONOLITHIC TEMPERED GLASS

Check out our video

Our video for easy installation tips and detailed product insights.

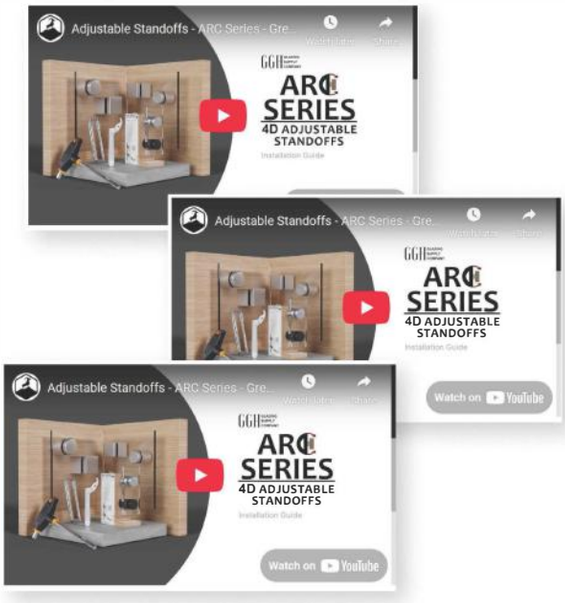

Get a closer look at our hardware in action.

At Grey Goat Hardware, we don't just sell products — we show you how they work, install, and perform. Our YouTube channel features hands-on demonstrations, product highlights, installation tips, and project showcases — all designed to help you work smarter and spec with confidence.

📲 Scan the QR Code to Watch
Or visit: www.youtube.com/@greygoathardware
Subscribe and stay updated on the latest innovations.

* For the most up-to-date product availability, visit our website.

Arc Series – 4D Adjustable

Standoffs

Brushed Stainless | Matte Black | Satin Brass | More Finishes Online

Grey Goat Hardware Standoffs offer a sleek, durable solution for mounting glass, acrylic, or signage panels — ideal for both architectural and decorative applications.

- **Design Compliance:** Engineered to meet National Building Code
- **Patents Canada:** Patent No. 3113019 USA: Patent pending

- **Material:** High-grade Stainless Steel (AISI 316)
- **Glass Thickness Compatibility:** Suitable for 3/8" to 7/8" (10mm to 21.52mm) monolithic tempered glass
- **Glass Fabrication Requirement:** Ø7/8" (22.25mm)

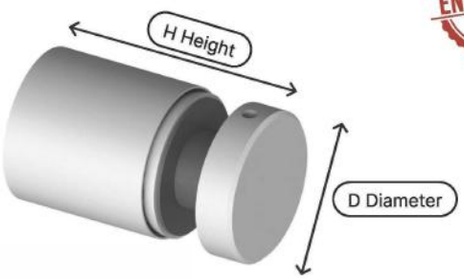

Arc Series Standoff Round

Diameter	Height	SKU
1-1/2" Ø	1-1/4"	RDARC1.5X1.25
1-1/2" Ø	1-1/2"	RDARC1.5X1.5
2" Ø	1-1/4"	RDARC2X1.25
2" Ø	1-1/2"	RDARC2X1.5
2" Ø	2"	RDARC2X2

Arc Series & Accessories

- **Material:** High-grade Stainless Steel (AISI 316)
- **Glass Thickness Compatibility:** Suitable for 3/8" to 7/8" (10mm to 21.52mm) monolithic tempered glass
- **Glass Fabrication Requirement:** Ø7/8" (22.25mm)

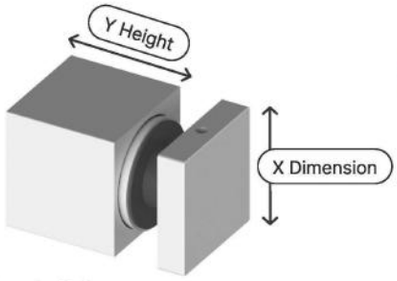

Arc Series Standoff Square

X	Y	SKU
1-1/2"	1-1/2"	SQARC1.5X1.5
2"	2"	SQARC2X2

ARC-TOOL
T Wrench

BOLT-M10X84
Countersunk Anchor Bolts

SCREW-ST10X100
Countersunk Wood Screw

* For the most up-to-date product availability, visit our website.

Solid Standoffs

Standoffs

- **Material:** High-grade Stainless Steel (AISI 316)
- **Glass Thickness Compatibility:** Suitable for 3/8" to 7/8" (10mm to 21.52mm) monolithic tempered glass
- **Glass Fabrication Requirement:** Ø7/8" (22.25mm)

Finishes

Brushed Stainless | Matte Black | Satin Brass | White | Custom Finish Available

* : below mention, cap does not come with 1 inch Allen Screw.

Solid Round 1-1/2" Ø Standoffs

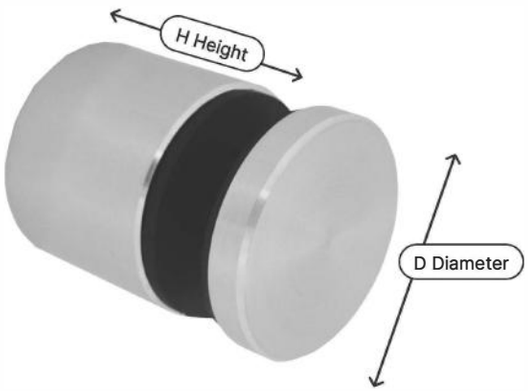

Glass Fabrication: 3/4" (19mm) Ø (Suggested)*

Diameter	Height	SKU
1-1/2" Ø **	1/4"	SSO1.5X0.25
1-1/2" Ø **	1/2"	SSO1.5X0.5
1-1/2" Ø **	3/4"	SSO1.5X0.75
1-1/2" Ø	1"	SSO1.5X1
1-1/2" Ø	1-1/4"	SSO1.5X1.25
1-1/2" Ø	1/2"	SSO1.5X1.5
1-1/2" Ø	2"	SSO1.5X2

Solid Round 2" Ø Standoffs

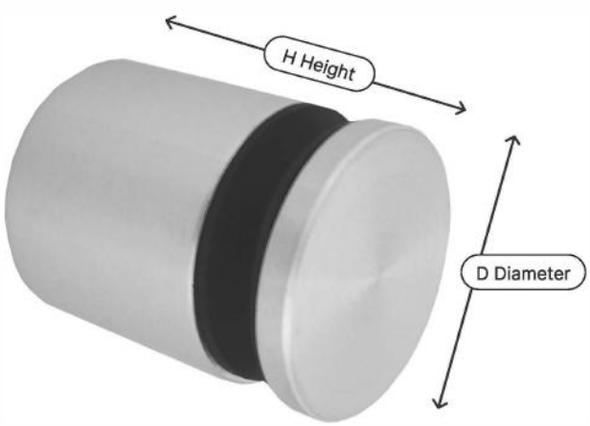

Glass Fabrication: 3/4" (19mm) Ø (Suggested)*

Diameter	Height	SKU
2" Ø **	1/4"	SSO2X0.25
2" Ø **	1/2"	SSO2X0.5
2" Ø **	3/4"	SSO2X0.75
2" Ø	1"	SSO2X1
2" Ø	1-1/4"	SSO2X1.25
2" Ø	1-1/2	SSO2X1.5
2" Ø	1-3/4"	SSO2X1.75
2" Ø	2"	SSO2X2
2" Ø	1/2" - 13 Thread	SSOH2X2
2" Ø	2-1/4"	SSO2X2.25
2" Ø	2-1/2"	SSO2X2.5
2" Ø	3"	SSO2X3
2" Ø	3-1/2"	SSO2X3.5

* For the most up-to-date product availability, visit our website.

Solid Standoffs

Standoffs

- **Material:** High-grade Stainless Steel (AISI 316)
- **Glass Thickness Compatibility:** Suitable for 3/8" to 7/8" (10mm to 21.52mm) monolithic tempered glass
- **Glass Fabrication Requirement:** Ø7/8" (22.25mm)

Finishes

Brushed Stainless | Matte Black | Satin Brass | White | Custom Finish Available

Solid Square 2" x 2" Standoffs

Glass Fabrication: 3/4" (19mm) Dia (Suggested)*

Dimension	SKU
2" X 2"	SQSO2X2
2" X 1-1/2"	SQSO2X1.5

Solid Round Standoff Cap

Dimension	SKU
1-1/2"	SSOC1.5
2"	SSOC2

Clear Black

SOGAS1.5-1

Gasket For Standoffs - 1.5" Ø- X 1 & 2 mm Thick

Clear Black

SOGAS2-1

Gasket For Standoffs - 2" Ø- X 1 & 2 mm Thick

Solid Standoff Base

Standoffs

Brushed Stainless | Matte Black | Satin Brass | White | Custom Finishes

2" (50mm) Ø

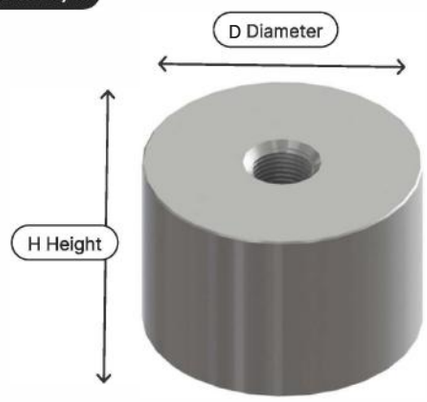

Solid Standoff Base - SS316 - Round

Diameter	Height	SKU
2" Ø	2"	SSOB2X2
2" Ø	1-1/2"	SSOB2X1.5
2" Ø	1-1/4"	SSOB2X1.25
2" Ø	1"	SSOB2X1
2" Ø	3/4"	SSOB2X0.75
2" Ø	1/2"	SSOB2X0.5
2" Ø	1/4"	SSOB2X0.25

1-1/2" (38mm) Ø

Solid Standoff Base - SS316 - Round

Diameter	Height	SKU
1-1/2" Ø	2"	SSOB1.5X2
1-1/2" Ø	1-1/2"	SSOB1.5X1.5
1-1/2" Ø	1-1/4"	SSOB1.5X1.25
1-1/2" Ø	1"	SSOB1.5X1
1-1/2" Ø	3/4"	SSOB1.5X0.75
1-1/2" Ø	1/2"	SSOB1.5X0.5
1-1/2" Ø	1/4"	SSOB1.5X0.25

Solid Round Standoff Cap

Diamater	SKU
1-1/2" Ø	SSOC1.5
2" Ø	SSOC2

Hanger Bolts & Threaded Rod

Standoffs

Stainless Steel / Zinc

We provides 1" to 2" (X) threading for Hanger Bolt.

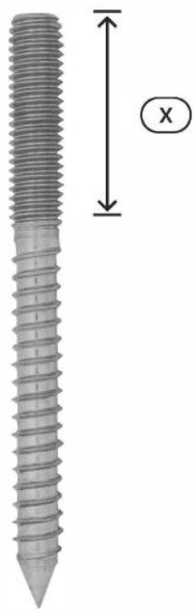

Hanger Bolt

Size	Material	SKU
2-1/2"	ZINC	HB38X2.5Z
3.5"	ZINC	HB38X3.5Z
4.5"	ZINC	HB38X4.5Z
2-1/2"	SS316	HB38X2.5SS
3"	SS316	HB38X3SS
3.5"	SS316	HB38X3.5SS
3-3/4"	SS316	HB12X3.75SS
4"	SS316	HB38X4SS
4.5"	SS316	HB38X4.5SS
5"	SS316	HB38X5SS
6"	SS316	HB12X6SS
6.5"	SS316	HB38X6.5SS

Stainless Steel

Threaded Rod

Size	Material	SKU
3/8" X 6"	SS316	TR38X6-SS316
1/2" X 6-1/4"	SS316	TR12X6.25SS

Gaskets & Accessories

Standoffs

DRIVER-HANGERBOLT
Driver

SOWRENCH
Wrench

Super Duty Standoff Tightening Kit
For Easy & Safe Installation

SSOKIT
Standoffs Tightening Kit

BEST FOR ARC STANDOFFS

ARC-TOOL
T Wrench 10mm

BOLT-M10X84
SCREW-ST10X100
Countersunk Anchor Bolts & Wood Screw

Available In Clear & Black

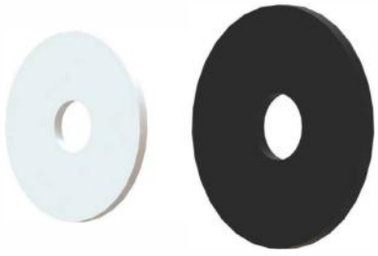

SOGAS1.5-1 **SOGAS1.5-2**
SOGAS2-1 **SOGAS2-2**
Gasket For Standoffs - 1.5"Ø or 2"Ø (1 & 2 mm Thick)

Single Sheet & Pack of 10 Available

DESIGNER'S APPROVED

FAST GLASS TEMPLATING

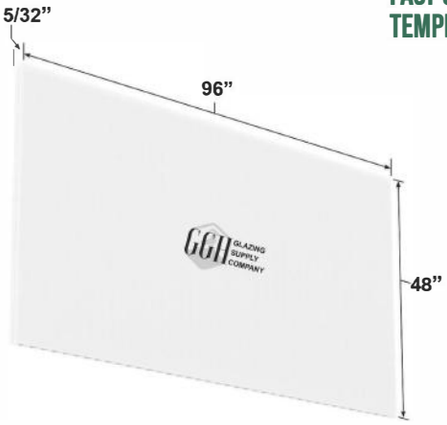

TEMPSHEET
Templating Sheet - Polypropylene Corrugated Plastic - (96" X 48" X 5/32")

Standoffs With Mounting Plate

Standoffs

Finishes

Brushed Stainless
Matte Black
Custom Finishes

Architects Recommend

SSOPLATE2

2"Ø Standoffs with Mounting Plate

Product Overview

- **Features**: 2"Ø Standoff available in Side Mount.
- **Recommended Glass Thickness**: 1/2" (12mm).
- **Dimension**: 4" X 8" Back Plate.

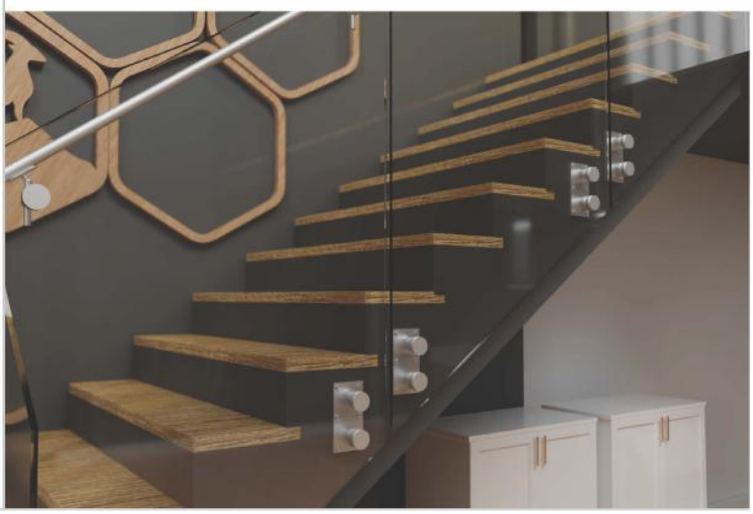

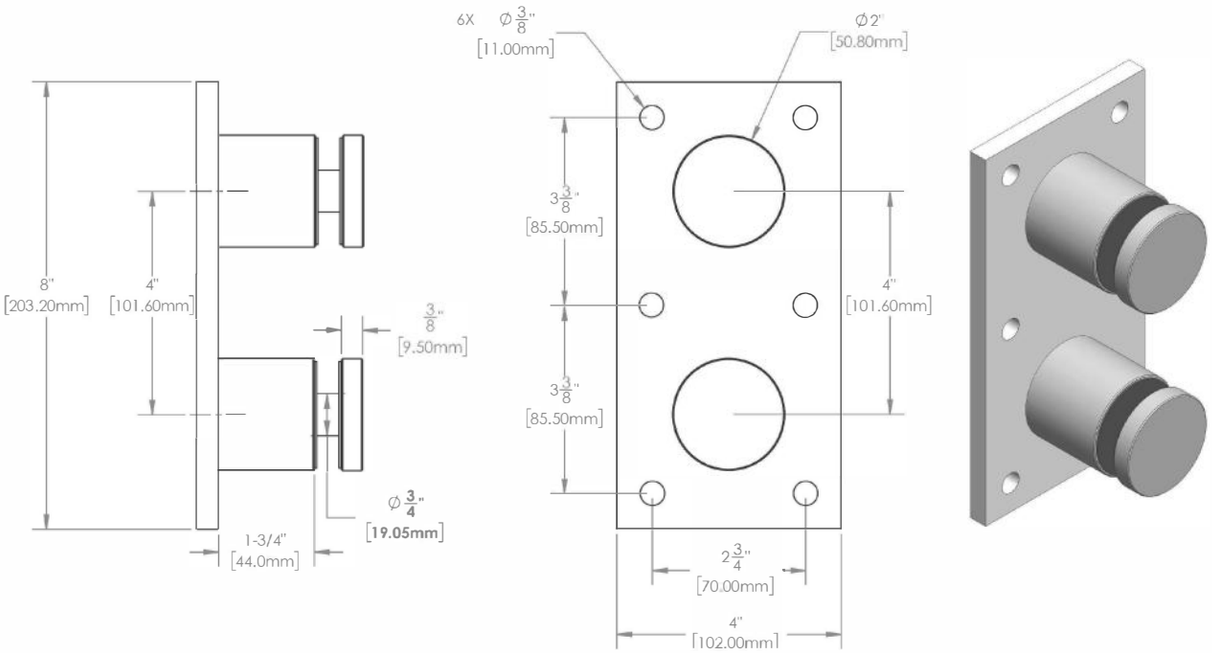

Display Standoffs

Finishes

- Brushed Stainless
- Matte Black
- Satin Brass
- Custom Finishes

Key Features

- **Material:** High-grade Stainless Steel (AISI 316)
- **Glass Thickness Compatibility:** Suitable for 3/8" to 7/8" (10mm to 21.52mm) monolithic tempered glass
- **Glass Fabrication Requirement:** Ø1/2" (12mm)

DESIGNER'S APPROVED

USE ONLY MONOLITHIC TEMPERED GLASS

DSO3412 *
Display Standoff in 3/4" Ø

Diameter	Base Height	SKU
3/4"	1/2"	DSO3412
3/4"	3/4"	DSO3434
3/4"	1"	DSO341
3/4"	1-1/2"	DSO34112
3/4"	2"	DSO342
3/4"	4"	DSO344

Cap Only

DCAP34
Standoff Cap In 3/4" Dia

Cap Only

DCAP114
Standoff Cap In 1-1/4" Dia

DSO11412 *
Display Standoff in 1-1/4" Ø

Diameter	Base Height	SKU
1-1/4"	1/2"	DSO11412
1-1/4"	3/4"	DSO11434
1-1/4"	1"	DSO1141
1-1/4"	1-1/2"	DSO114112
1-1/4"	2"	DSO1142
1-1/4"	4"	DSO1144

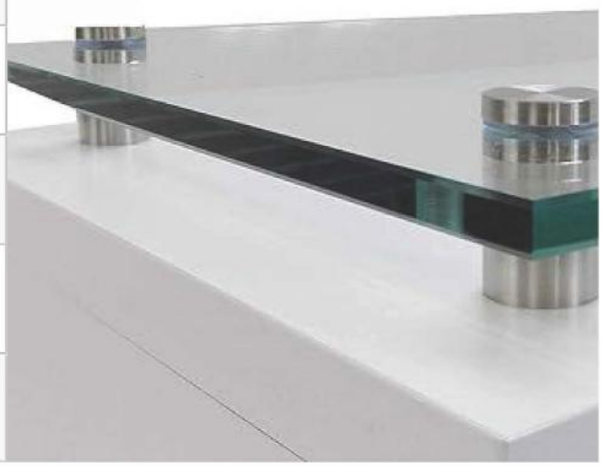

* For the most up-to-date product availability, visit our website.

Railing Glass Panels (1/2")

34” - 46” Railing Glass Panel **114**

46” Glass Panel With Hinge Cutout **115**

Glass Panel With Hinge & Latch Cutout **116**

1/2" (12mm) Railing Glass Panel

Railing Glass Panels (1/2") Thickness

- CAN/CGSB 12.1-2017
- ANSI Z97.1-2015
- Certified by SGCC®

(Certification documents available upon request)

34" Height

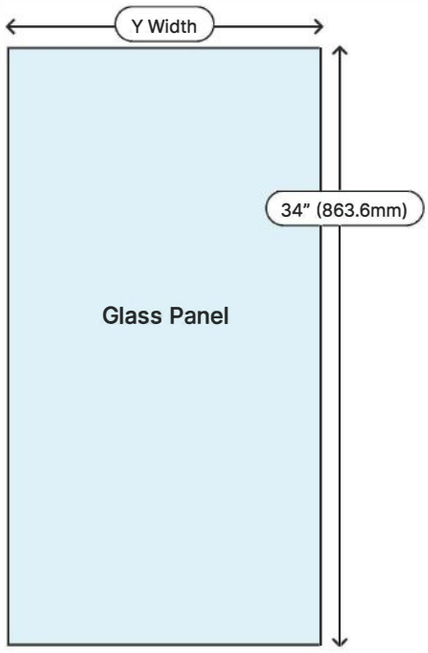

Perfect for Solid Round 1-1/2" Ø Standoffs

Dimension	SKU
18X34	RG18X34
22X34	RG22X34
26X34	RG26X34
30X34	RG30X34
34X34	RG34X34
36X34	RG36X34
42X34	RG42X34
44X34	RG44X34
48X34	RG48X34
50X34	RG50X34
54X34	RG54X34
56X34	RG56X34
60X34	RG60X34
66X34	RG66X34
72X34	RG72X34

41" Height

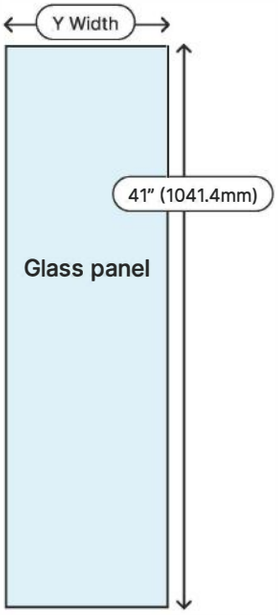

Perfect for Solid Round 2" Ø Standoffs

Dimension	SKU	Dimension	SKU
12X41	RG12X41	44X41	RG44X41
14X41	RG14X41	46X41	RG46X41
16X41	RG16X41	48X41	RG48X41
18X41	RG18X41	50X41	RG50X41
20X41	RG20X41	52X41	RG52X41
22X41	RG22X41	54X41	RG54X41
24X41	RG24X41	56X41	RG56X41
26X41	RG26X41	58X41	RG58X41
28X41	RG28X41	60X41	RG60X41
30X41	RG30X41	62X41	RG62X41
32X41	RG32X41	64X41	RG64X41
34X41	RG34X41	66X41	RG66X41
36X41	RG36X41	68X41	RG68X41
38X41	RG38X41	70X41	RG70X41
40X41	RG40X41	72X41	RG72X41
42X41	RG42X41		

* For the most up-to-date product availability, visit our website.

1/2" (12mm) Railing Glass Panel

Railing Glass Panels (1/2") Thickness

- CAN/CGSB 12.1-2017
- ANSI Z97.1-2015
- Certified by SGCC®

(Certification documents available upon request)

46" Height

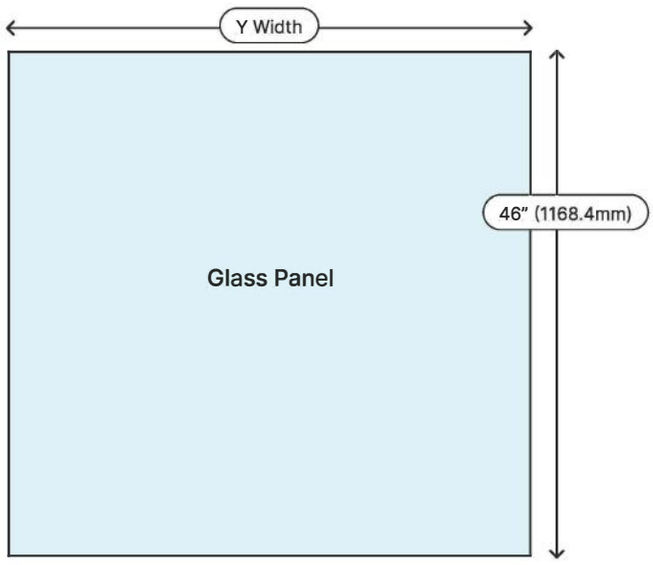

Dimension	SKU
32X46	RG32X46
48X46	RG48X46
54X46	RG54X46
60X46	RG60X46
70×46	RG70X46
72X46	RG72X46

1/2" (12mm) Railing Glass Panel With Hinge Cutout only

46" Height With Hinge Cutout

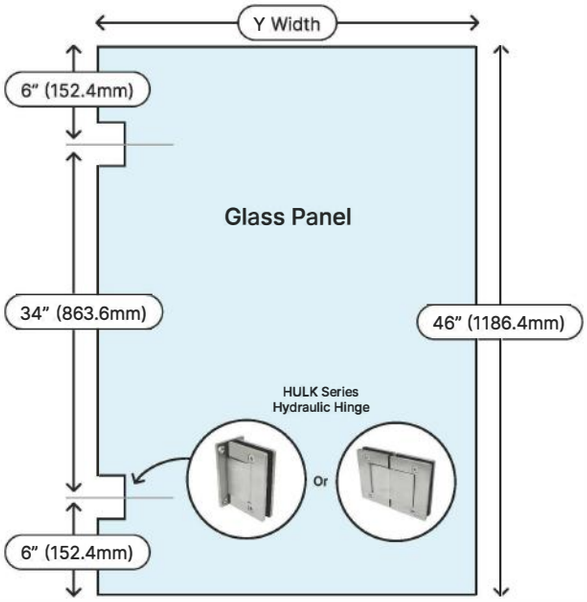

Dimension	SKU
32X46	RG32X46-2H
48X46	RG48X46-2H
54X46	RG54X46-2H
60X46	RG60X46-2H

* For the most up-to-date product availability, visit our website.

1/2" (12mm) Railing Glass Panel With Hinge & Latch Cutout

Railing Glass Panels (1/2") Thickness

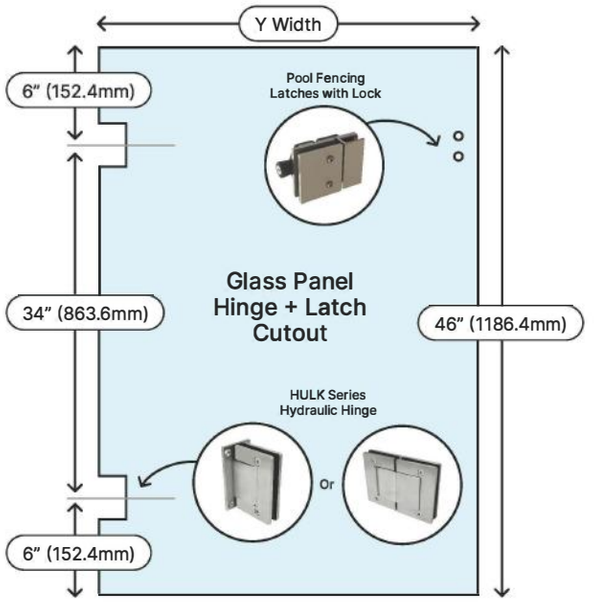

RG32X46-2HL

1/2" Railing Glass Panel (Size: 32" x 46") With Hinge & Latch Cutout

Refer to local building codes for product compliance and installation requirements.

Factory Order Program

Factory Direct Savings on Volume Orders

Take advantage of our Factory Direct Program and save big on large-scale shower door orders. Whether you're working on condos, high-rises, or residential developments, we make the process easy, fast, and cost-effective

What You Get

01 Full Crates of Glass Shipped Directly to You
- Delivered fast and hassle-free - right to your shop or job-site.

02 Order Today – Just Give Us a Call
- Our team is ready to assist with quotes, coordination, and delivery planning.

Contact us to enroll: **sales@ggshardware.com**

Speak with our program manager: **1-905-264-1600**

Ask about our MOQ charts, lead time options, and program perks.

Pro Series – Engineered

Railing Post - Blank	**118**
Railing Posts - Square (32"-42")	**119**
Railing Posts - Round (32"-42")	**120**
Railing Posts - Side Mount	**121**
Railing Post - Stairs Mount	**122**
Railing Post - Accessories	**123**
Railing Post - Double Arm	**124**
Double Arm Connector	**125**
Railing Mini Post	**126**

Architectural Railing Post – Blank

Pro Series - Engineered

Finishes

Brushed Stainless
Matte Black
Custom Finishes

***All Post Endcaps and Saddle Support Sold Separately**

Square

1-9/16" X 1-9/16"

Sold Separate

44"
(1117mm)

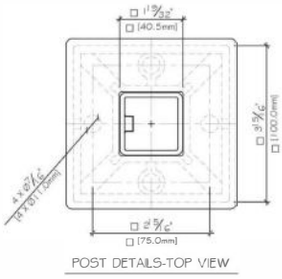

Base Plate With Cap Included

SPRO44B

Square Pro Series Railing Post - 44" Height

Specification

- **Material:** Constructed from high-quality Stainless Steel 316, offering superior durability and resistance to corrosion.
- **Customizable Design:** Blank posts with no pre-drilled holes, allowing for fabrication based on project-specific needs.
- **Applications:** Ideal for both residential and commercial installations, suitable for interior and exterior use.
- **Warranty:** Backed by a full 5-year warranty for peace of mind.
- **Compliance:** Engineered to meet Ontario and National Building Code requirements.

Square

2" X 2"

50"
(1270mm)

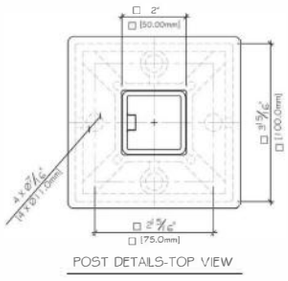

***2"X2" post allows for gate post with small picture of Hulk Hinge**

page number: __

Base Plate With Cap Included

SPRO50B

Square Pro Series Railing Post - 50" Height - Blank

Round

1-11/16" Ø

Sold Separate

44"
(1117mm)

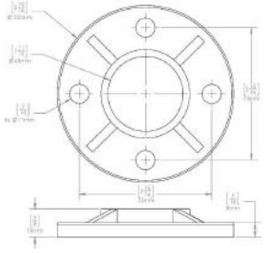

Base Plate With Cap Included

RPRO44B

Round Pro Railing Post - 44" Base Height - Blank

Architectural Railing Posts – Square (32"–42”)

Pro Series - Engineered

Finishes

Brushed Stainless
Matte Black
More Finishes Online

***All Post Endcaps and Saddle Support Sold Separately**

End Post

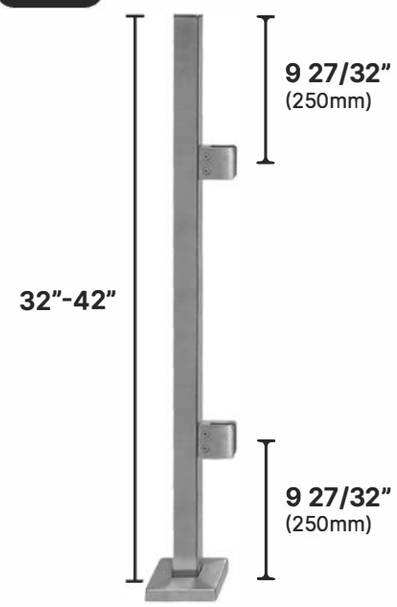

Inline Post

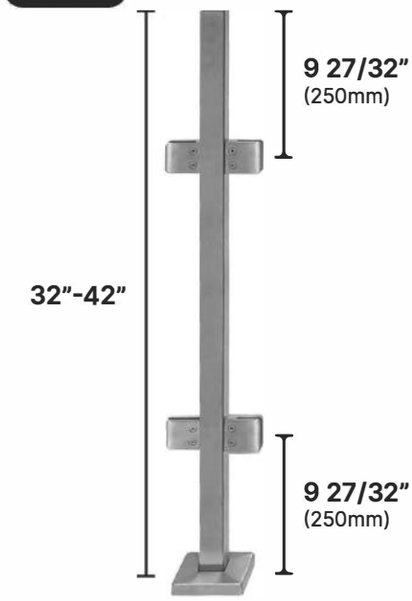

Corner Post

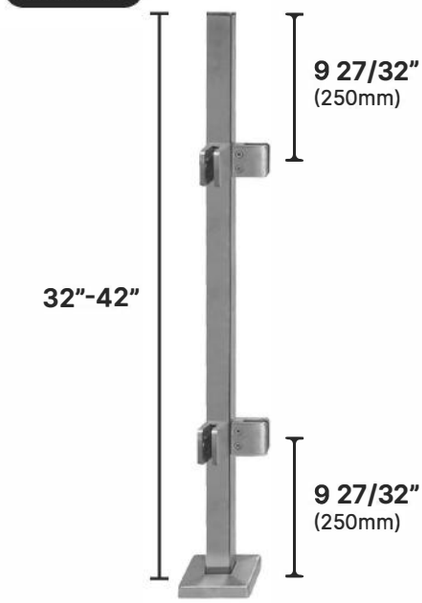

Available Height	SKU	Available Height	SKU	Available Height	SKU
32” (812.8mm)	SPRO32E	**32”** (812.8mm)	SPRO32I	**32”** (812.8mm)	SPRO32C
36” (914.4mm)	SPRO36E	**36”** (914.4mm)	SPRO36I	**36”** (914.4mm)	SPRO36C
38” (978mm)	SPRO38E	**38”** (978mm)	SPRO38I	**38”** (978mm)	SPRO38C
42” (1067mm)	SPRO42E	**42”** (1067mm)	SPRO42I	**42”** (1067mm)	SPRO42C

* For the most up-to-date product availability, visit our website.

Architectural Railing Posts – Round (32"–42")

Pro Series - Engineered

Finishes

Brushed Stainless
Matte Black
Custom Finishes

***All Post Endcaps and Saddle Support Sold Separately**

End Post

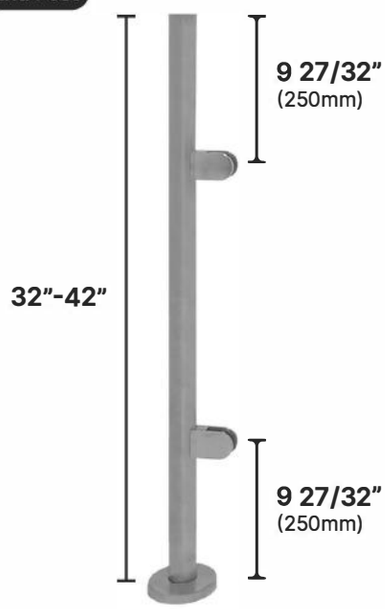

Inline Post

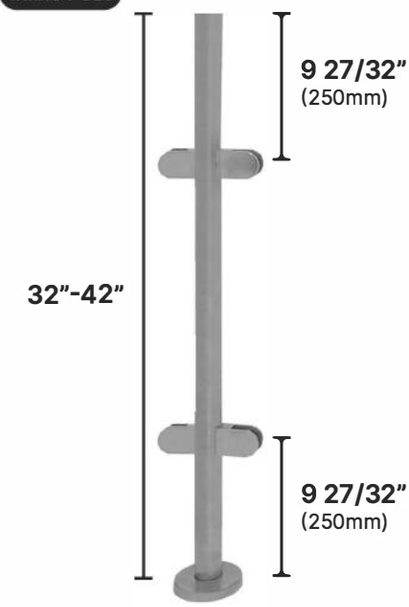

Corner Post

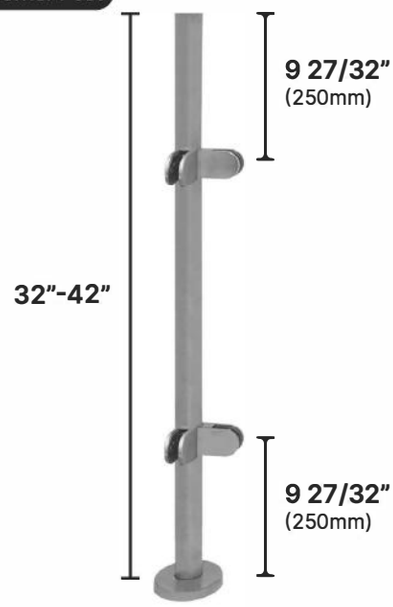

Available Height	SKU	Available Height	SKU	Available Height	SKU
32" (812.8mm)	RPRO32E	**32"** (812.8mm)	RPRO32I	**32"** (812.8mm)	RPRO32C
36" (914.4mm)	RPRO36E	**36"** (914.4mm)	RPRO36I	**36"** (914.4mm)	RPRO36C
38" (978mm)	RPRO38E	**38"** (978mm)	RPRO38I	**38"** (978mm)	RPRO38C
42" (1067mm)	RPRO42E	**42"** (1067mm)	RPRO42I	**42"** (1067mm)	RPRO42C

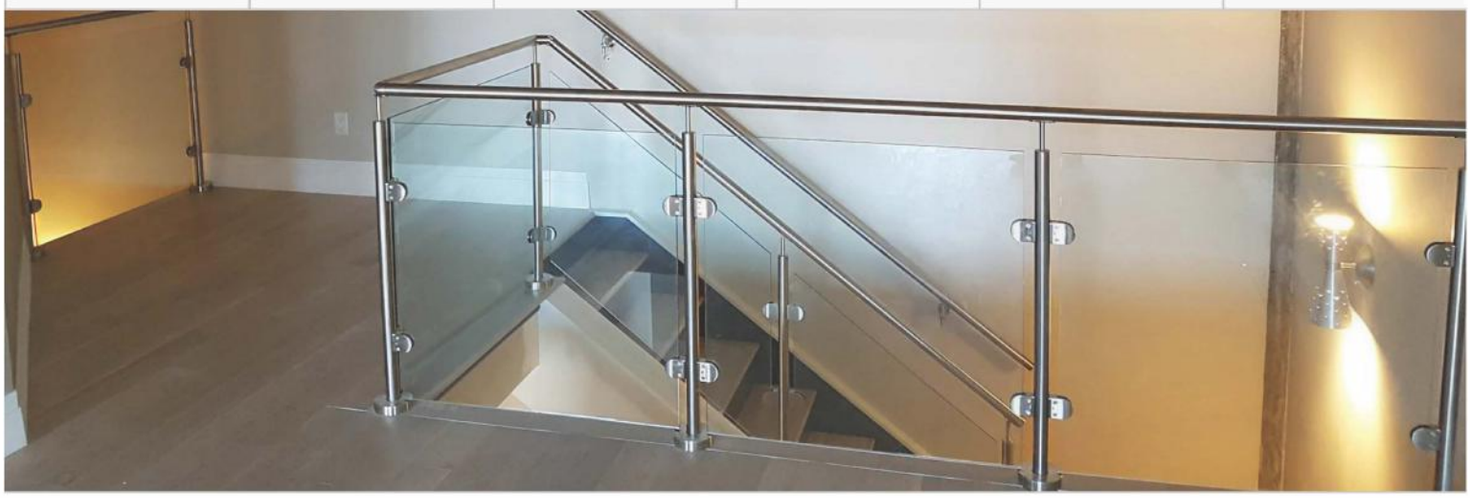

* For the most up-to-date product availability, visit our website.

Architectural Railing Posts – Side Mount

Pro Series - (Order On Request)

Finishes

Brushed Stainless
Matte Black
More Finishes Online

FEATURE PRODUCTS

Custom Fabrication Available

End Post

SPROSIDEE
Side Mount Square Pro Railing Post
CUSTOM - End Post

Inline Post

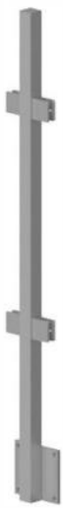

SPROSIDEI
Side Mount Square Pro Railing Post
CUSTOM - Inline Post

Corner External Post

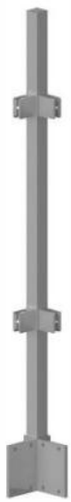

SPROSIDEEXT
Side Mount Square Pro Railing Post
CUSTOM - External Post

Corner Internal Post

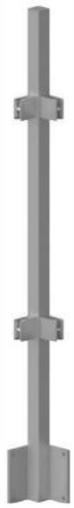

SPROSIDEINT
Side Mount Square Pro Railing Post
CUSTOM - Internal Post

Custom Side Mount Post Requirements:

A: Distance from top of the post to 1st clamp.
B: Distance between clamp to clamp.
C: Distance from 2nd clamp to bottom of the post.
H: Total height of the post.
X: Width of the Mounting Plate.
Y: Height of the Mounting Plate.
T: Thickness of the Mounting Plate.
G: Hole distance from edge of the plate.

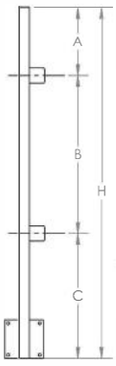

End Post

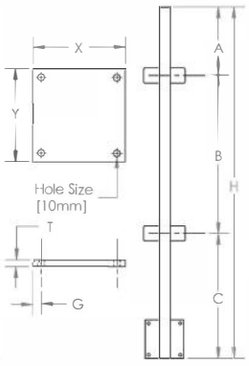

Inline Post

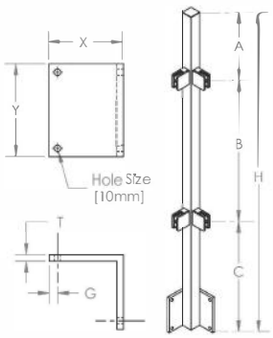

90° Inside Post

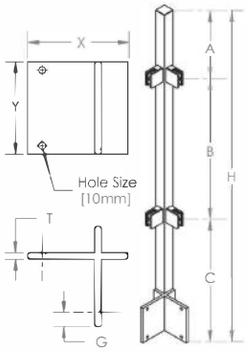

90° Outside Post

Architectural Railing Post – For Stairs

Pro Series

Finishes

Brushed Stainless
Matte Black
Custom Finishes

Specification

Made from heavy-gauge 316 stainless steel for superior corrosion resistance, this 40×40mm (1.57"x1.57") post stands 32" tall, with 36", 38", and 42" options available. Includes gaskets for 10mm (3/8") and 12mm (1/2") toughened glass.

Inline Stair

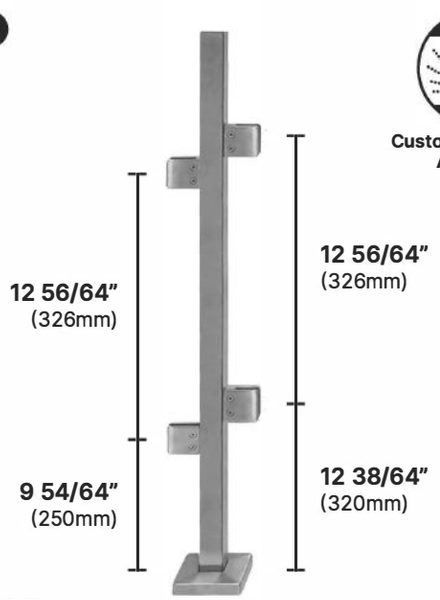

Custom Fabrication Available

SPRO32STAIR

32" Base Height - Inline

Specification

- **Material:** Constructed from high-quality Stainless Steel 316, offering superior durability and resistance to corrosion.
- **Various Configuration:** Available with per-fabricated clamps for Inline, Corner and end post.
- **Applications:** Ideal for both residential and commercial stair glass panels installations, suitable for interior and exterior use.
- **Warranty:** Backed by a full 5-year warranty for peace of mind.
- **Compliance:** Engineered to meet Ontario and National Building Code requirements.

Custom Fabrication Available based on your requirement, send us quote on **products@ggshardware.com**

Inline Ground

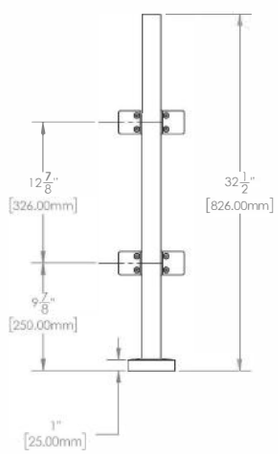

Inline Stair

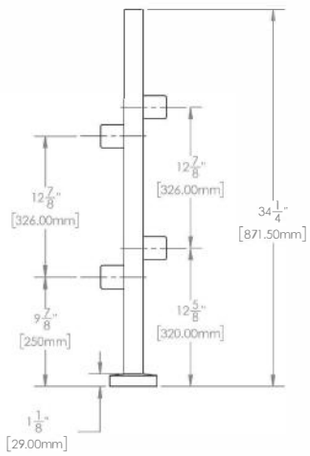

End Post

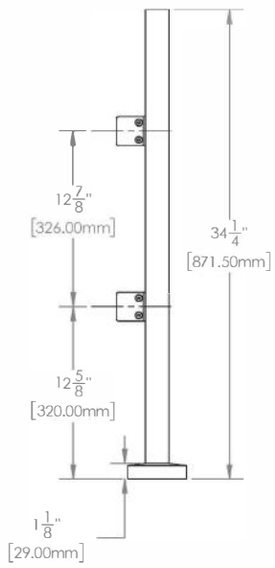

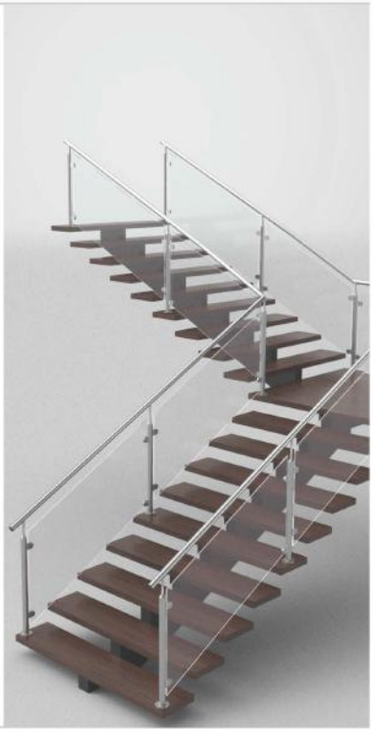

Architectural Railing Post – Accessories

Pro Series - Engineered

Finishes

Brushed Stainless
Matte Black
More Finishes Online

SPROBASE
Base Plate for Square Posts

CP40SQ
Coverplate for Square Post

RPROSUP
Handrail Support - Round

RPROSUPADJ
Handrail Support - Round - Adjustable

SPROSUP
Handrail Support - Square

SPROSUPADJ
Handrail Support - Square - Adjustable

FLATSAD135
Flat Saddle - 135°

FLATSAD180
Flat Saddle - 180°

FLATSAD90
Flat Saddle - 90°

3" Length

WEDGEANCHOR-3/8X3
Wedge Anchor 3/8" Diameter

3/8"

LAGBOLT-3/8X3
Hex Lag Bolt - 3/8" X 3-1/2"

* For the most up-to-date product availability, visit our website.

Architectural Railing Posts – Double Arm Posts

Double Arm Posts

Finishes

Brushed Stainless
Matte Black
Custom Finishes

Custom Fabrication Available

ADJ-RD

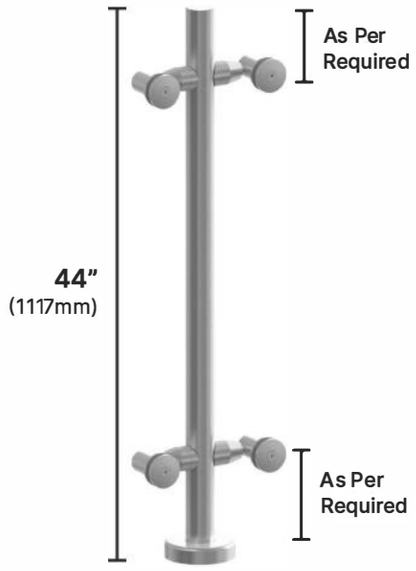

RPROARM-44ADJ
Adjustable Round Post - 44" Height

ADJ-SQ

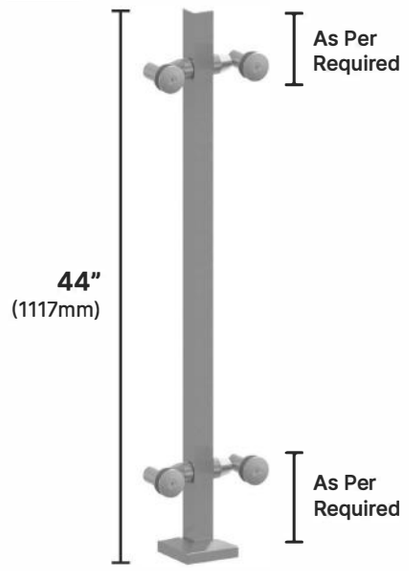

SPROARM-44ADJ
Adjustable Square Post - 44" Height

Round

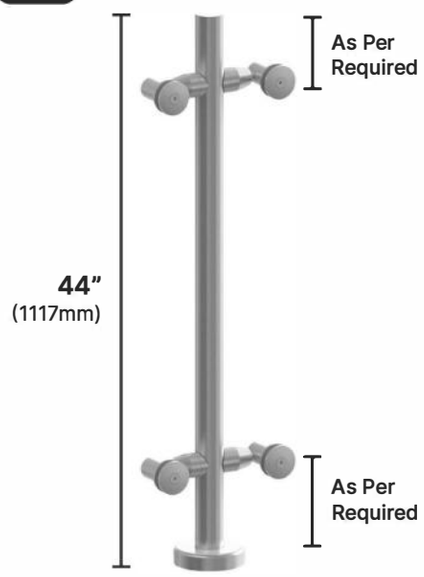

RPROARM-44
Fixed Round Post - 44" Height

Square

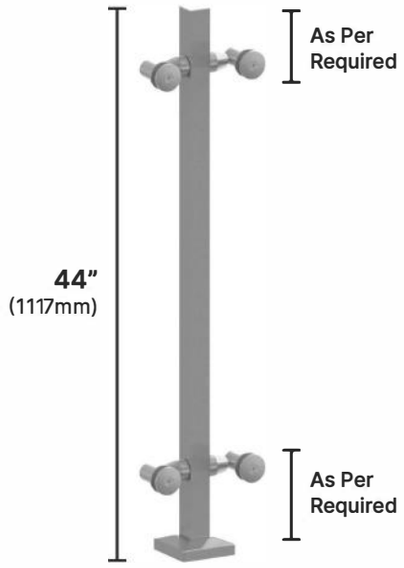

SPROARM-44
Fixed Square Post - 44" Height

ADJ-SQ

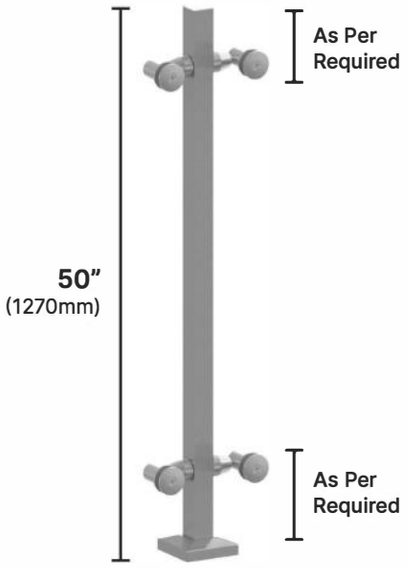

SPROARM-50ADJ
Adjustable Square Post - 50" Height

Square

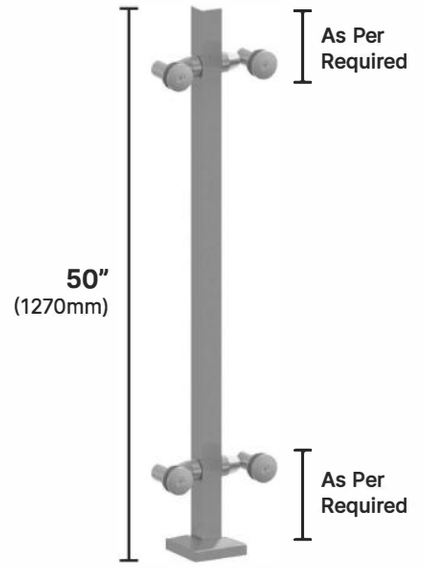

SPROARM-50
Fixed Square Post - 50" Height

Double Arm Connector

DESIGNER'S APPROVED

Finishes

Brushed Stainless Steel
Matte Black Anodized Aluminum
Custom Finishes

- **Premium Material:** Made from high-quality stainless steel for strength and long-lasting performance.
- **Glass Compatibility:** Suitable for 1/2" to 13/16" (12mm to 20mm)thick glass.

Adjustable

PROARMADJ
Pro Series Double Arm Glass Connector - Adjustable

Fixed

PROARM
Pro Series Double Arm Glass Connector - Fixed

Canopy Bracket

GREAT VALUE
FEATURE PRODUCTS

Finishes

Brushed Stainless Steel
Matte Black Anodized Aluminum
Custom Finishes

*Custom configuration
and size available based upon request products@ggshardware.com

Custom Fabrication Available

24"

GC2401
Glass Canopy Bracket (24" Height)

36"

GC3601
Glass Canopy Bracket (36" Height)

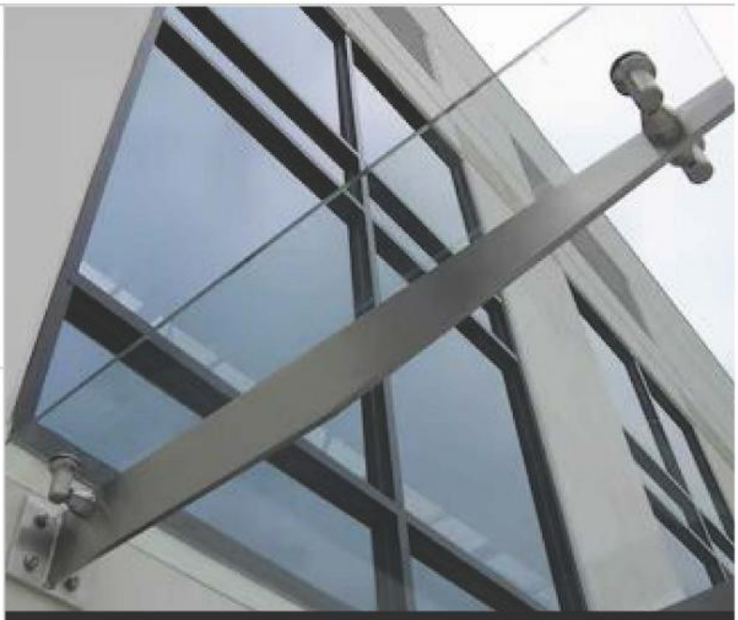

Ask us about
FACTORY DIRECT PROGRAM

Railing Mini Post

*Engineered for nationala nd building code

Finishes

- Brushed Stainless
- Matte Black
- Custom Finish Available

- **Compact Design**: Mini posts measure 3/4" x 2" with a total height of 12" (including surface mount plate).
- **Strong Surface Mount Plate**: 5-1/2" x 3" x 3/4" base for secure installation.
- **Glass Compatibility**: Recommended for 1/2" (12mm) glass panels.

SS316

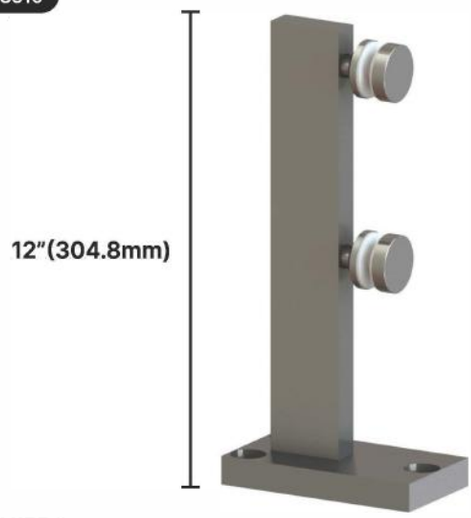

MINIPRO

Railing Mini Post - Surface Mount
Glass fabrication required, visit ggshardware.com for reference

SS316

MINIPROSM

Railing Mini Post - Side Mount
Glass fabrication required, visit ggshardware.com for reference

Divider Series – Partition Post

Finishes

Brushed Stainless
Matte Black
Custom Finishes

Specification:

- **Versatile Use:** Ideal for creating sleek, modern glass partition systems in office desk, commercial, or residential spaces.
- **Profile Options:** Available in both End-to-End Glass and Air Space Glass profile configurations to suit your design and privacy requirements.

PPOST1
Partition Post - 1 Way

PPOST2C
Partition Post - 2 Way Corner

PPOST3
Partition Post - 3 Way

PPOST2I
Partition Post - 2 Way Inline

PPOST4
Partition Post - 4 Way

PPOSTH1
Air Gap Partition Post
1 Way

PPOSTH2C
Air Gap Partition Post -
2 Way Corner

PPOSTH3
Air Gap Partition Post
3 Way

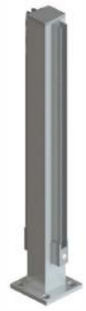

PPOSTH2I
Air Gap Partition Post -
2 Way Inline

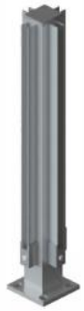

PPOSTH4
Air Gap Partition Post
4 Way

G-AWS Aluminum Windscreen System

Overview

The Windscreen Awning System is a modern, durable solution for creating glass wind barriers in residential and commercial outdoor spaces.

Ask us about
FACTORY DIRECT PROGRAM

Key Features

- Clean, contemporary design with minimal hardware for unobstructed views
- Low-maintenance aluminum construction with corrosion-resistant finish
- Supports both dry and wet glazing methods, depending on glass thickness
- Suitable for installation on concrete slabs, block walls, or individual footings
- Adaptable to flat, sloped, or stepped surfaces
- Ideal for decks, patios, balconies, and poolside enclosures
- Standard color options available, with custom finishes upon request
- Compatible with phased construction timelines for added flexibility

* For the most up-to-date product availability, visit our website.

02 RAILING HARDWARE

Railing Clamps

Square Railing Clamps **130**

Railing Clamps Accessories **131**

Pool Fencing - Brackets **132**

Square Railing Clamps

CLAM Series - SS316 & ZINC

Finishes

Brushed Stainless
Polished Stainless
Matte Black

SS316

SCLAM
Square Clamp - 55×55mm - Flat Back

SS316

SCLAMRB
Square Clamp - 61×55mm - Round Back

SS316

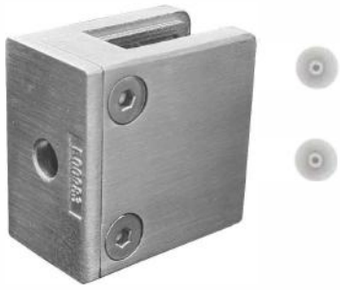

SCLAM54
Square Clamp - 54×54mm - Flat Back

ZINC

SCLAMZ
Square Clamp - 55×55mm - Flat Back

High-Quality Stainless Steel Clamps for Secure Glass Installation

- **Material:** Constructed with high-grade SS316 stainless steel, offering exceptional corrosion resistance for both indoor and outdoor use.
- **Glass Compatibility:** Designed to securely hold 10mm (3/8 inch) and 12mm (1/2 inch) thick monolithic tempered glass.

Round Railing Clamps

CLAM Series - SS316 & ZINC

INSTALLER'S FAVORITE!
GOAT Drill & Spade Bits,
Refer Page Number: 272

SS316

RCLAMFB
Round Clamp - 63×45mm - Flat Back

SS316

RCLAM
Round Clamp - 67×45mm - Round Back

* For the most up-to-date product availability, visit our website.

Railing Clamps Accessories

CLAM Series - SS316

INSTALLER'S FAVORITE!
GOAT Drill & Spade Bits,
Refer Page Number: 272

Finishes

Brushed Stainless
Polished Stainless
Matte Black

SCLAMCONSQ
Adjustable 180° Connector
For Square Post

SCLAMCONRD
Adjustable 180° Connector
For Round Post

CLAMSAFETYPIN
Extra Pair of Safety Pin

SCREW-M8X20
Replacement Allen Screws

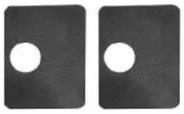

SCLAMRUB
Rubber Inserts

Dimension	SKU(PAIR)
12mm Glass	SCLAMRUB12
10mm Glass	SCLAMRUB10
8mm Glass	SCLAMRUB8
6mm Glass	SCLAMRUB6

RCLAMRUB
Rubber Inserts

Dimension	SKU(PAIR)
12mm Glass	RCLAMRUB12
10mm Glass	RCLAMRUB10
8mm Glass	RCLAMRUB8
6mm Glass	RCLAMRUB6

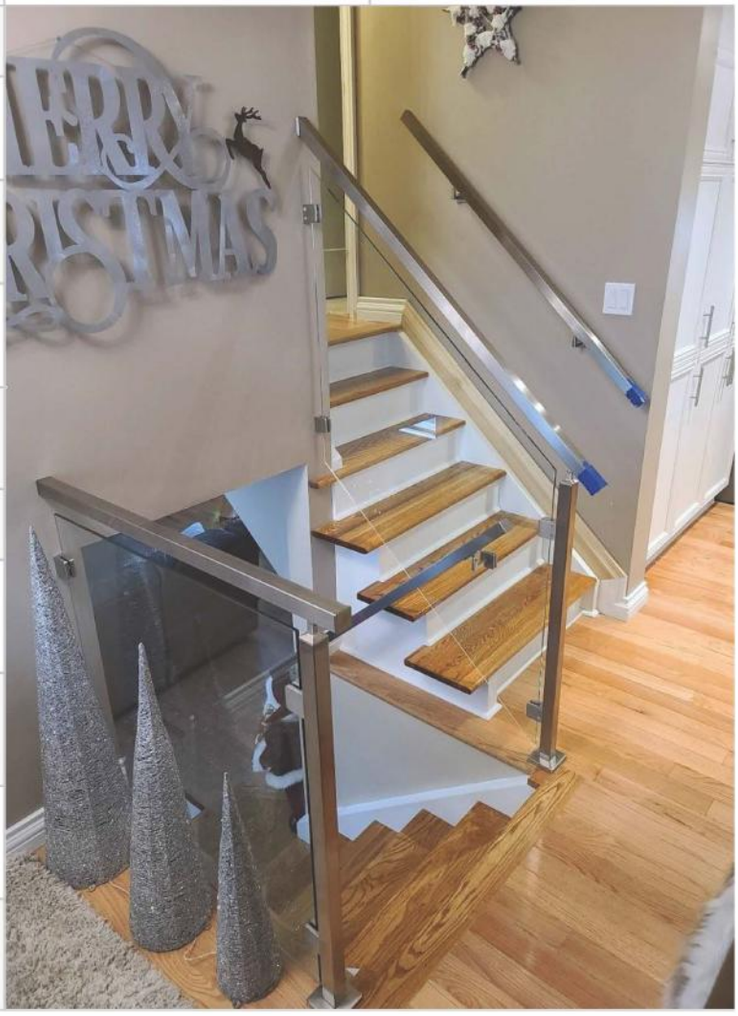

Pool Fencing – Brackets

Railing Clamps

Finishes

- Brushed Stainless
- Polished Stainless
- Matte Black

Key Features

- **Materials:** Crafted from premium Stainless Steel 316 for superior strength and corrosion resistance
- **Applications:** Ideal for pool fencing, offering a modern and secure enclosure for both residential and non-residential properties
- **Glass Compatibility:** Suitable for 5/16" to 1/2" (8mm, 10mm, and 12mm) monolithic tempered glass

BDIVESQ90
Pool Fencing Bracket 90° Glass to Glass - Square

BDIVE90
Pool Fencing Bracket 90° Glass to Glass - Round

BDIVE180SQ
Pool Fencing Bracket 180° Glass to Glass - Square

BDIVE180RD
Pool Fencing Bracket 180° Glass to Glass - Round

* For the most up-to-date product availability, visit our website.

Railing Handrails & Caprails

Handrail - RD - 42.4mm Ø **134**
Handrail - RD - 38.1mm Ø **136**
Handrail - SQ - 40X40mm **137**
Handrail - REC - 50mm X 25mm **138**
Caprail - RD - 42.4mm Ø **139**
Caprail - SQ - 40mm **140**
Caprail - REC - 60×40mm **141**
Caprail - SQ - 1”X1” **142**
Aluminum Caprail - RD - 42.4mm Ø **143**
Aluminum Caprail - SQ **144**
Aluminum Caprail - REC **145**

Handrail – Round – 1–5/8" (42.4mm) Ø

Handrails & Caprails (19FT)

Finishes

- Brushed Anodized Aluminum
- Matte Black Anodized Aluminum
- Custom Finishes Available

- **Premium Material**: Constructed from SS316 stainless steel for durability and long-term performance.
- **Standard Sizing**: 42.4mm (1-5/8") outer diameter with a 1.85mm wall thickness, available in a 19FT length.

Custom Fabrication Available

1-5/8" Ø

HR42.4
42.4mm Ø Round Handrail - 19' Length

END42.4
Endcap for Handrail

END42.4B
Ball Endcap for Handrail

E42.4F180
Handrail Elbow - 180° Fixed

CP42.4
Cover Plate Handrail

E42.4WELD90
Handrail Elbow
90° Welded

E42.4F90
Handrail Elbow
90° Fixed

E42.4MT90
Handrail Elbow
90° Mitered

E42.4ADJ90
Handrail Elbow
90° Adjustable

END42.4C
Handrail Elbow
Curved

Handrail – Round – 1–5/8" (42.4mm) Ø

Handrails & Caprails (19FT)

Finishes

- Brushed Anodized Aluminum
- Matte Black Anodized Aluminum
- Custom Finishes

- **Premium Material:** Constructed from SS316 stainless steel for durability and long-term performance.
- **Standard Sizing:** 42.4mm (1-1/2") outer diameter with a 1.85mm wall thickness, available in a 19FT length.

Custom Fabrication Available

E42.4T180
42.4mm Handrail Elbow
T-Shape 180°

E42.4T90
42.4mm Handrail Elbow
T-Shape 90°

E42.4F135
42.4mm Handrail Elbow
Fixed 135°

E42.4ADJR
42.4mm Handrail Elbow
Adjustable Right

E42.4ADJL
42.4mm Handrail Elbow
Adjustable Left

E42.4R360
42.4mm Handrail Elbow
Rotating 360°

RPROSUP
Handrail Support - Round

RPROSUPADJ
Handrail Support
Round - Adjustable

WF42.4ADJ
Wall Mount Flange
42.4mm Handrail -Adjustable

WF42.4HD
Wall Mount Flange - 42.4mm Handrail - Heavy Duty

Handrail – Round – 1-1/2" (38.1mm) Ø

Handrails & Caprails (19FT)

Finishes

- Brushed Anodized Aluminum
- Matte Black Anodized Aluminum
- Custom Finishes Available

- **Premium Material**: Constructed from SS316 stainless steel for durability and long-term performance.
- **Standard Sizing**: 1-1/2" (38.1mm) outer diameter with a 1.85mm wall thickness, available in a 19FT length.

Custom Fabrication Available

1-1/2" Ø

HR38.1
38.1mm Ø Round Handrail - 19' Length

END38.1
Endcap for Handrail

E38.1F90
Handrail Elbow - 90° Fixed

E38.1MT90
Handrail Elbow - 90° Mitered

E38.1ADJ90
Handrail Elbow
90° Adjustable

E38.1F180
Handrail Elbow
180° Fixed

E38.1F135
Handrail Elbow
135° Fixed

RPROSUP
Handrail Support - Round

RPROSUPADJ
Handrail Support - Round - Adjustable

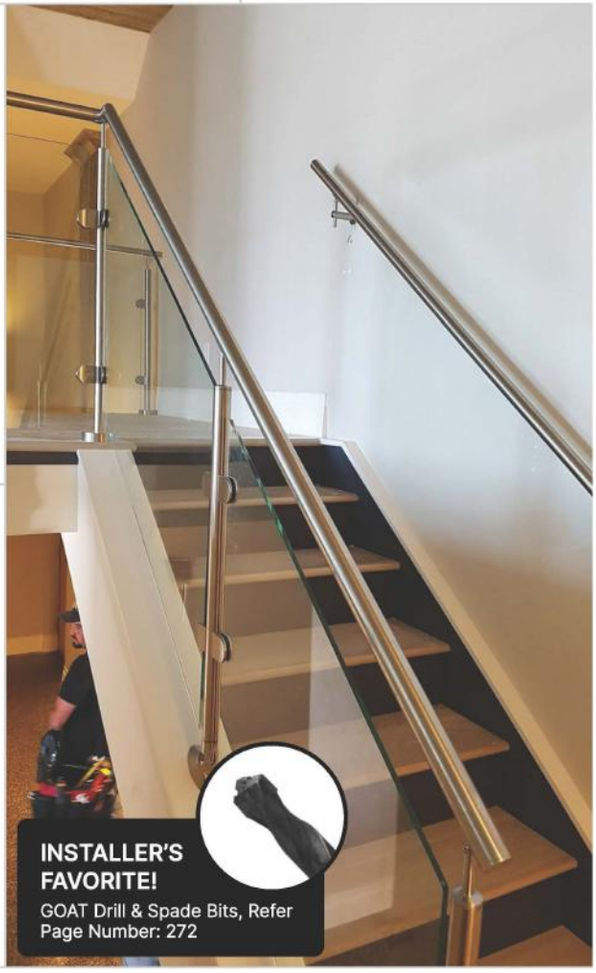

INSTALLER'S FAVORITE!
GOAT Drill & Spade Bits, Refer Page Number: 272

Handrail – Square – 1-9/16" (40mm)

Handrails & Caprails (19FT)

Finishes

- Brushed Anodized Aluminum
- Matte Black Anodized Aluminum
- Custom Finishes Available

- **Premium Material**: Manufactured from high-gauge SS316 stainless steel for superior strength and corrosion resistance.
- **Standard Sizing**: 40mm x 40mm (1-5/8") square profile, available in a 19FT length.

Custom Fabrication Available

1-5/8"

HR40SQ
40mm Square Handrail - 19' Length

END40SQ
Endcap for 40mm Handrail

E40F90
40mm Square Handrail Elbow Fixed 90°

E40ADJ90
40mm Square Handrail Elbow Adjustable 90°

E40F180
40mm Square Handrail Elbow Fixed 180°

CP40SQ
40mm Square Handrail Cover Plate

WF40SQHD
Wall Mount Flange 40mm Square - Handrail - HD

WF40ADJ
Wall Mount Flange 40mm Handrail - Adjustable

SPROSUP
Handrail Support - Square

SPROSUPADJ
Handrail Support - Square - Adjustable

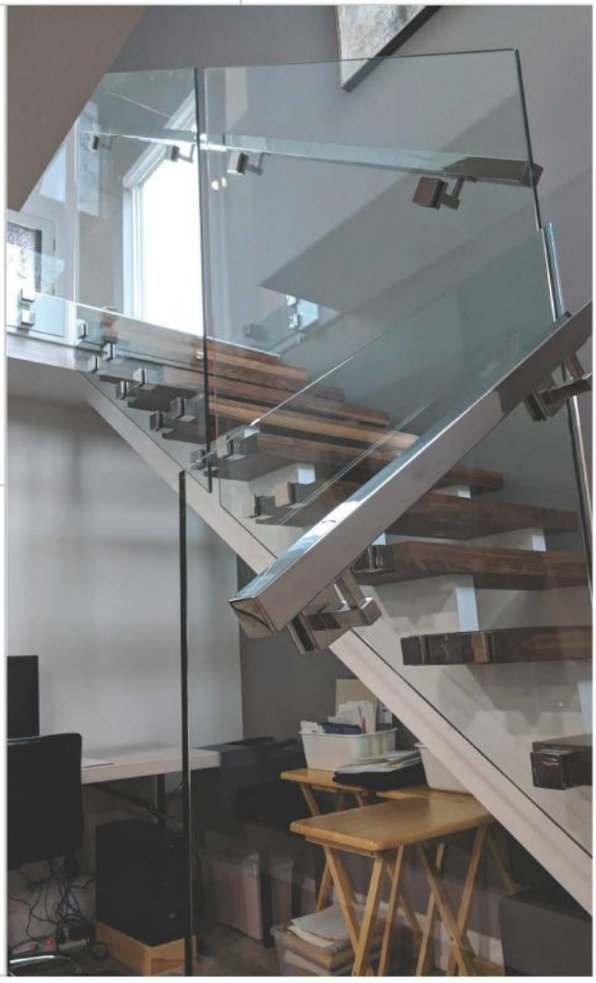

Handrail – Rectangle – 2" X 1" (50x25mm)

Handrails & Caprails (19FT)

Finishes

Brushed Stainless Steel
Matte Black Anodized Aluminum
More Finishes Online

- **Premium Material**: Constructed from SS316 stainless steel for enhanced strength and longevity.
- **Standard Sizing**: 2" x 1", available in a 19FT length.

Custom Fabrication Available

2" X 1"

HR2X1
2 X 1" Rectangle Handrail - 19' Length

END2X1
Endcap for 2X1" Square Handrail

E2X1F90H
Elbow - 2X1" SQ Handrail
Fixed 90° Horizontal

E2X1F90V
Elbow For 2X1" SQ Handrail
Fixed 90° Vertical

E2X1F180
Elbow For 2X1" SQ Handrail
Fixed 180°

E2X1ADJV
Elbow For 2X1" SQ Handrail
Adjustable Vertical 90°

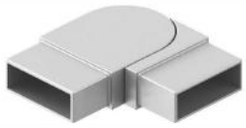

E2X1ADJH
Elbow For 2X1" SQ Handrail
Adjustable Horizontal 90°

SPROSUP
Handrail Support - Square

SPROSUPADJ
Handrail Support - Square - Adjustable

Caprail – Round – 1–5/8" (42.4mm) Ø

Handrails & Caprails (19FT)

Finishes

Brushed Stainless Steel
Matte Black Anodized Aluminum
More Finishes Online

- **Premium Material**: Constructed from SS316 stainless steel for enhanced strength and longevity.
- **Standard Sizing**: 1-5/8" outside diameter, available in a 19FT length.

Custom Fabrication Available

1-5/8"Ø

*Refer to our website for LED options

CR42.4
42.4 Ø Round Caprail - 19' Length

CEND42.4
Endcap for Caprail

WFC42.4
Wall Mount Flange for Caprail

CE42.4F180
Elbow For Caprail - 180° Fixed

CE42.4F90H
Elbow For Caprail - 90° Fixed Horizontal

CE42.4F90V
Elbow For Caprail - 90° Fixed Vertical

CE42.4ADJDN
Elbow For Caprail - Adjustable Downward

10 mm to 21 mm

CRUB
Rubber - 19' Length

Dimension	SKU
10mm (19')	CRUB10
12mm (19')	CRUB12
15mm (19')	CRUB15
17mm (19')	CRUB17
19mm (19')	CRUB19
21mm (19')	CRUB21

CE42.4ADJUP
Elbow For Caprail - Adjustable Upward

* For the most up-to-date product availability, visit our website.

Caprail – Square – 1-5/8" – (40x40mm)

Handrails & Caprails (19FT)

Finishes

Brushed Stainless Steel
Matte Black Anodized Aluminum
More Finishes Online

- **Premium Material:** Manufactured from high-gauge Stainless Steel 316 for superior corrosion resistance.
- **Modern Square Profile:** 40mm x 40mm (1-5/8") dimensions offer a sleek, contemporary look in 19'

Custom Fabrication Available

40mm Sqaure

*Refer to our website for LED options

CR40SQ
40mm Square Caprail 19' Length

CEND40SQ
Endcap For Caprail

WFC40SQ
Wall Mount Flange For Caprail

10 mm to 21 mm

CRUB
Rubber - 19' Length

Dimension	SKU
10mm (19')	CRUB10
12mm (19')	CRUB12
15mm (19')	CRUB15
17mm (19')	CRUB17
19mm (19')	CRUB19
21mm (19')	CRUB21

CE40F180
Elbow - 180° Fixed

CE40F90H
Elbow - 90° Fixed Horizontal

CE40F90V
Elbow - 90° Fixed Vertical

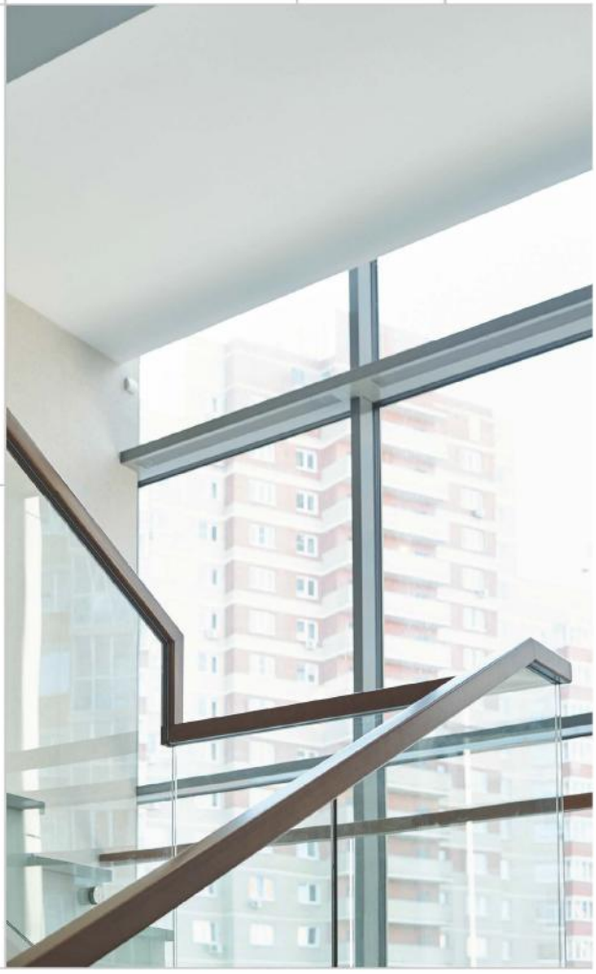

CE40ADJDN
Elbow - Adjustable Downward

CE40ADJUP
Elbow - Adjustable Upward

CP40SQ
Cover Plate - 40mm Square Caprail

* For the most up-to-date product availability, visit our website.

Caprail - Rectangle - 2-3/8"x1-9/16" (60X40mm)

Handrails & Caprails (19FT)

Finishes

Brushed Stainless Steel
Matte Black Anodized Aluminum
More Finishes Online

- **Premium Construction:** Made from 316 stainless steel for long-lasting durability and resistance to corrosion.
- **Modern Rectangular Design:** 60×40mm profile enhances architectural aesthetics.

2-3/8"x1-9/16"

*Refer to our website for LED options

CR60X40
60X40mm Rectangle Caprail
19' Length

CEND60X40
Endcap For Caprail

LED Options Available

Custom Fabrication Available

Caprail – Square – 1"x1" (25x21mm)

Handrails & Caprails (19FT)

Custom Fabrication Available

Finishes

Brushed Stainless Steel
Matte Black Anodized Aluminum
More Finishes Online

- **High-Quality Material:** Made from 316 stainless steel for superior corrosion resistance and durability.
- **Versatile Design:** Suitable for a variety of railing applications, including both commercial and residential spaces.
- **Customizable Length:** Available in a 19FT length, with options for custom cutting and fabrication.

1"x1"

*Refer to our website for LED options

CR1X1SQ
1 X 1" Square Caprail - 19' Length

CRUB12S
Small Rubber For Caprail

CEND1X1SQ
Endcap For Caprail

CE1X1F180
Elbow For Caprail
180° Fixed

WF1X1A
Wall Mount Flange
For 1 X 1" Caprail - Type A

CE1X1F90H
Elbow For Caprail
Fixed 90° Horizontal

CE1X1ADJ135H
Elbow For Caprail
Adjustable 135° Horizontal

CE1X1ADJ90V
Elbow For Caprail
Adjustable 90° Vertical

WF1X1B
Wall Mount Flange for 1 X 1" Caprail - Type B

* For the most up-to-date product availability, visit our website.

Aluminum Caprail – Round 1-5/8" (42.4mm) Ø

Handrails & Caprails (19FT)

Custom Fabrication Available

Finishes

- Brushed Stainless Steel
- Matte Black Anodized Aluminum
- More Finishes Online

- **Material:** Corrosion-resistant 6063-T5 aluminum for long-lasting durability.
- **Glass Compatibility:** Suitable for glass thicknesses of 10-21.52mm.
- **Available Finishes:** Satin Anodized and Matte Black.
- Lighter and Easier to Fabricate

1-5/8" Ø

*Refer to our website for LED options

ALCRRD
42.4mm Ø Round Caprail - 19' Length

ALWFRD
Aluminum Caprail - Round Wall Flange

ALCENDRD
Aluminum Caprail - Round End Cap

Fixed

ALCR90
Aluminum Caprail - 90° Connector

Fixed

ALCR180
Aluminum Caprail - 180° Connector

Adjustable

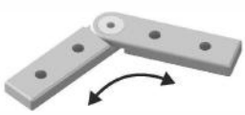

ALCRADJH
Aluminum Caprail - Horizontal Connector

Adjustable

ALCRADJV
Aluminum Caprail - Vertical Connector

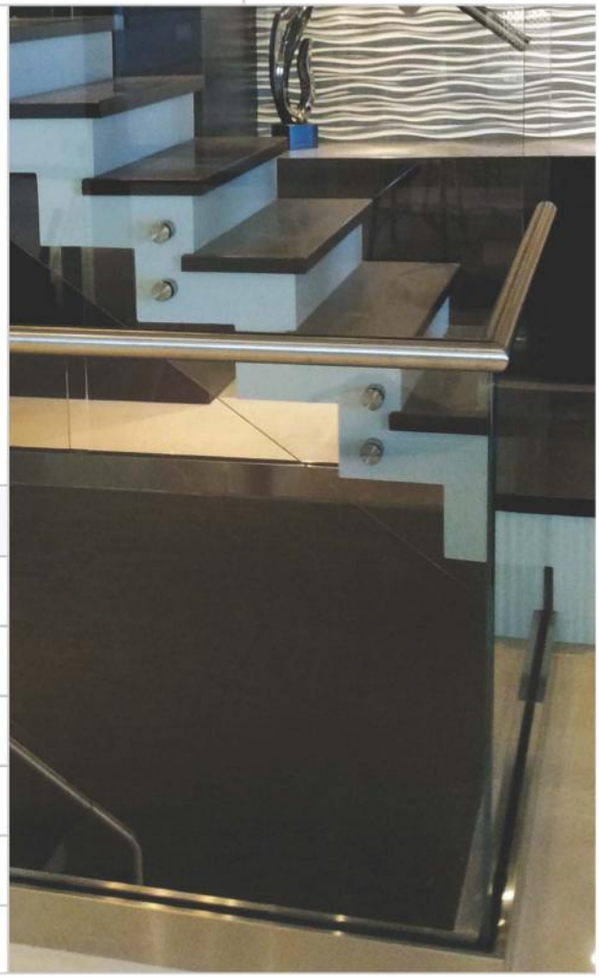

10 mm to 21 mm

CRUB
Rubber Gasket - 19' Length

Dimension	SKU
10mm (19')	CRUB10
12mm (19')	CRUB12
15mm (19')	CRUB15
17mm (19')	CRUB17
19mm (19')	CRUB19
21mm (19')	CRUB21

* For the most up-to-date product availability, visit our website.

Aluminum Caprail – Square – 1–9/16" (40mm)

Handrails & Caprails (19FT)

Finishes

- Brushed Stainless Steel
- Matte Black Anodized Aluminum
- Custom Finishes

- **Material:** Corrosion-resistant 6063-T5 aluminum for long-lasting durability.
- **Glass Compatibility:** Suitable for glass thicknesses of 10-21.52mm.
- **Available Finishes:** Satin Anodized and Matte Black.
- Lighter and Easier to Fabricate

1-9/16"

*Refer to our website for LED options

ALCRSQ
Square Aluminum Caprail - 19' Length

ALWFSQ
Aluminum Caprail Square Wall Flange

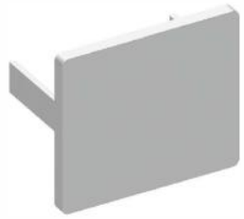

ALCENDSQ
Aluminum Caprail - Square End Cap

Fixed

ALCR90
Aluminum Caprail - 90° Connector

Fixed

ALCR180
Aluminum Caprail 180° Connector

Adjustable

ALCRADJH
Aluminum Caprail - Horizontal Adjustable Connector

Adjustable

ALCRADJV
Aluminum Caprail - Vertical Adjustable Connector

10 mm to 21 mm

CRUB
Rubber Gasket - 19' Length

Dimension	SKU
10mm (19')	CRUB10
12mm (19')	CRUB12
15mm (19')	CRUB15
17mm (19')	CRUB17
19mm (19')	CRUB19
21mm (19')	CRUB21

Aluminum Caprail – Rectangle

Handrails & Caprails (19FT)

Finishes

- Brushed Stainless Steel
- Matte Black Anodized Aluminum
- More Finishes Online

- **Material:** Corrosion-resistant 6063-T5 aluminum for long-lasting durability.
- **Glass Compatibility:** Suitable for glass thicknesses of 10-21.52mm.
- **Available Finishes:** Satin Anodized and Matte Black.
- **Lighter and Easier to Fabricate**

Square

*Refer to our website for LED options

ALCRREC
Rectangular Aluminum Caprail - 19' Length

ALWFREC
Aluminum Caprail - Rectangular Wall Flange

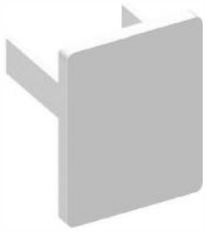

ALCENDREC
Aluminum Caprail - Rectangular End Cap

Fixed

ALCR90
Aluminum Caprail - 90° Connector

Fixed

ALCR180
Aluminum Caprail 180° Connector

Adjustable

ALCRADJH
Aluminum Caprail - Horizontal Adjustable Connector

Adjustable

ALCRADJV
Aluminum Caprail - Vertical Adjustable Connector

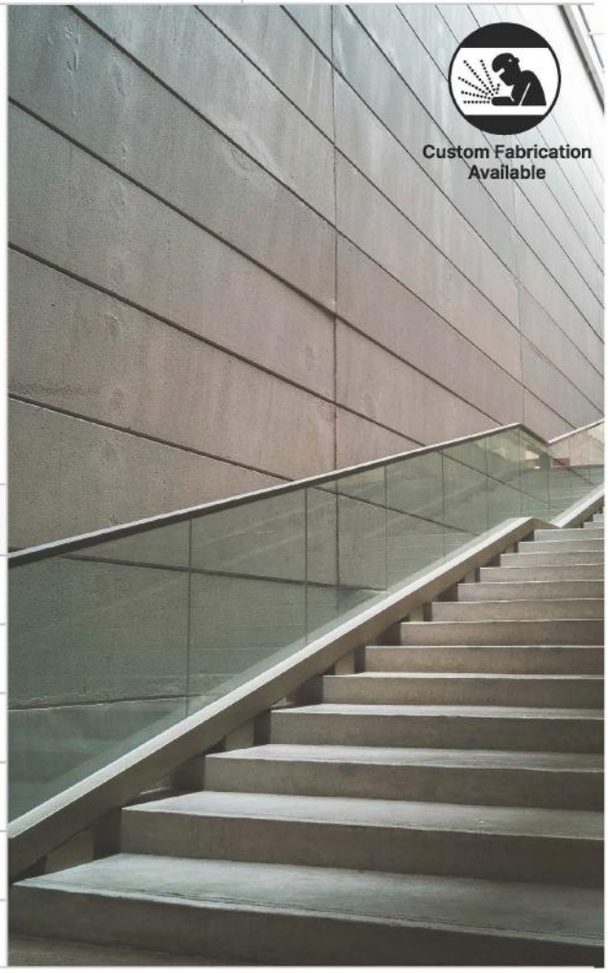

10 mm to 21 mm

CRUB
Rubber Gasket - 19' Length

Dimension	SKU
10mm (19')	CRUB10
12mm (19')	CRUB12
15mm (19')	CRUB15
17mm (19')	CRUB17
19mm (19')	CRUB19
21mm (19')	CRUB21

Romeo Juliet Balcony System

Brushed Anodized Aluminum

Matte Black Anodized Aluminum

Key Features

- Full range of Romeo Juliet Balcony System
- Match with H6030 slotted handrail system
- Suitable for 10-21.52mm glass with optional rubbers
- The centre of glass is 86mm distance off wall
- The glass does NOT require holes
- FAST FIT Mini Rails are supplied in any length
- Reduced MINIMUM visual impact
- No welding installation

Contact Us On

products@ggshardware.com
For More Information!

Handrail Brackets

Handrail Brackets - Wall Mount **148**
Handrail Brackets - Glass Mount **149**

Handrail Brackets – Wall Mount

Finishes

- Brushed Stainless Steel
- Matte Black Anodized Aluminum
- More Finishes Online

Acronyms:

WM: Wall Mount
GM: Glass Mount
RD: Round
SQ: Square
Material: SS316

Architects Recommend

HRB3X3WM - Fixed
3X3" with Round Saddle

HRB3X2WM - Fixed
3X2" with Round Saddle

HRB3X3WM - Fixed
3X3" with Flat Saddle

HRB3X2WM - Fixed
3X2” with Flat Saddle

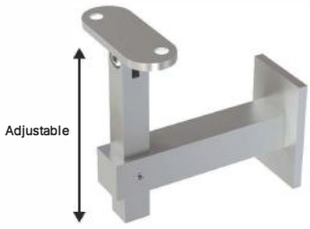

SHRBADJWM
Adjustable Wall Mount - Flat Saddle

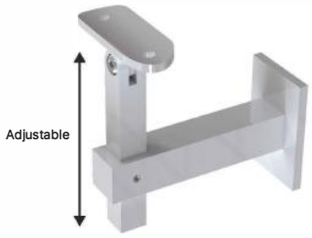

SHRBADJWM
Adjustable Wall Mount - Round Saddle

HRBADJWM
Adjustable Wall Mount - Round Saddle

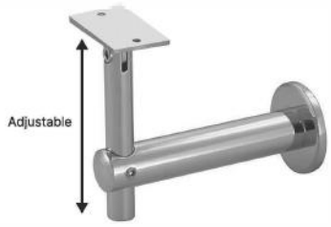

HRBADJWM
Adjustable Wall Mount - Flat Saddle

Flat 4.5”

EXTHRB4.5WM
4-1/2" Length with Flat Saddle

Flat 6”

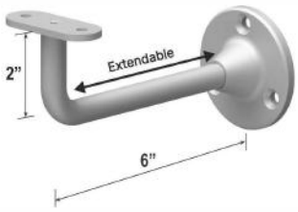

EXTHRB6WM
6" Length with Flat Saddle

Round 4.5”

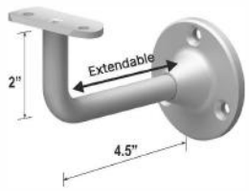

EXTHRB4.5WM
4-1/2” Length with Round Saddle

Round 6”

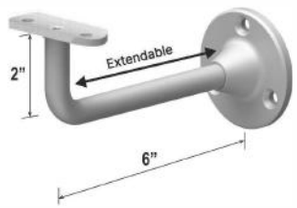

EXTHRB6WM
6" Length with Round Saddle

Handrail Brackets – Glass Mount

Finishes

- Brushed Stainless Steel
- Matte Black Anodized Aluminum
- Custom Finishes

Acronyms:

WM: Wall Mount
GM: Glass Mount
RD: Round
SQ: Square
Material: SS316

Designers Selected

HRB3X2GM - Fixed
3X2" with Round Saddle

HRB3X3GM - Fixed
3X3" with Round Saddle

HRB3X2GM - Fixed
3X2" with Flat Saddle

HRB3X3GM - Fixed
3X3” with Flat Saddle

SHRBADJGM
Adjustable Glass Mount - Flat Saddle

SHRBADJGM
Adjustable Glass Mount - Round Saddle

HRBADJGM
Adjustable Glass Mount - Round Saddle

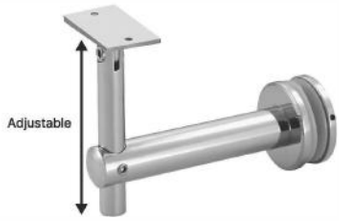

HRBADJGM
Adjustable Glass Mount - Flat Saddle

Flat 4.5”

EXTHRB4.5GM
4-1/2" Length with Flat Saddle

Flat 6”

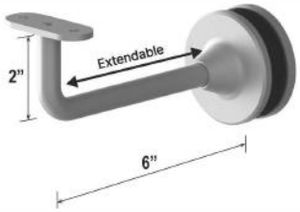

EXTHRB6GM
6" Length with Flat Saddle

Round 4.5”

EXTHRB4.5GM
4-1/2" Length with Round Saddle

Round 6”

EXTHRB6GM
6" Length with Round Saddle

Handrail Brackets

DESIGNER'S APPROVED

Finishes

- Brushed Stainless Steel
- Matte Black Anodized Aluminum
- More Finishes Online

Acronyms:

WM: Wall Mount
SQ: Square
RD: Round
Material: SS316

WM 2" X 2-1/2"

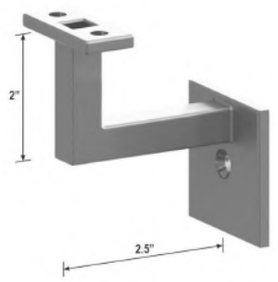

SHRB2X2.5WM
2" X 2-1/2" - Wall Mount

WM 2" X 3-1/2"

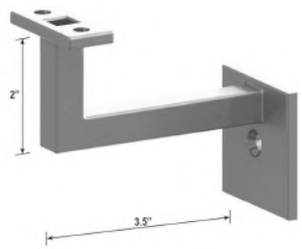

SHRB2X3.5WM
2" X 3-1/2" - Wall Mount

Note: Visit ggshardware.com
For Glass Fabrication & Product Information.

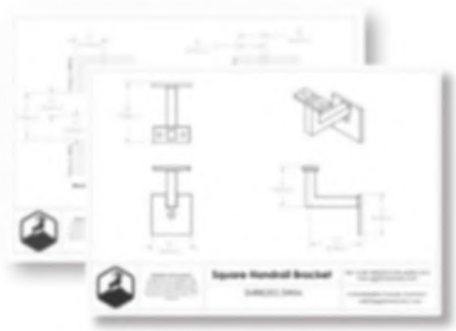

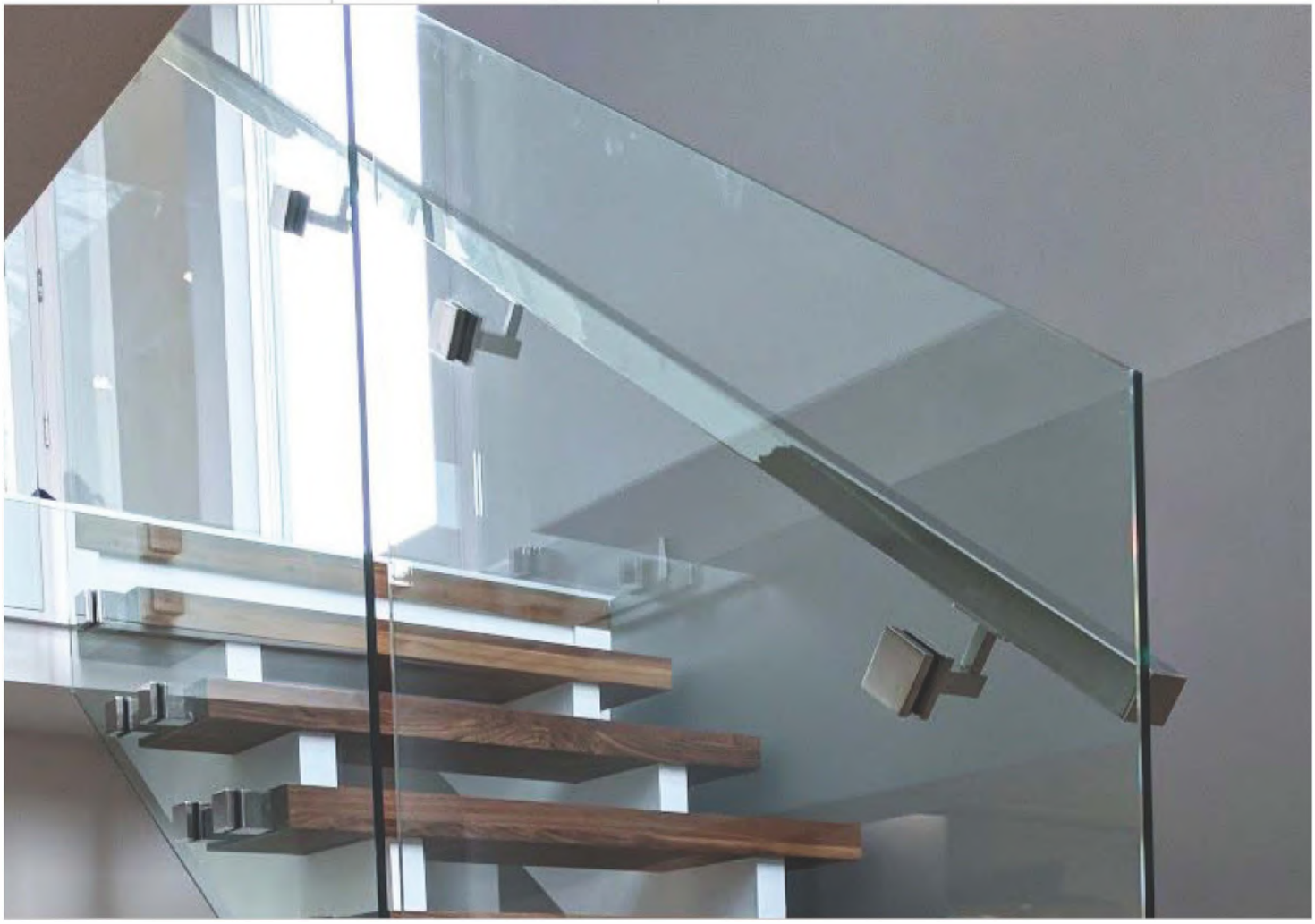

Aluminum Posts

Modern Elegance Series - Kits	**152**
Modern Elegance Series - Accessories	**153**
GOAT Cable Railing System	**154**
Hulk Series - Hinges	**156**

Modern Elegance Series- Kit

Aluminum Posts

Finishes

Matte Black

More Finishes Online

*Refer to website for kit components

42" & 50"*

Modern Elegance - 42" Post - All In One

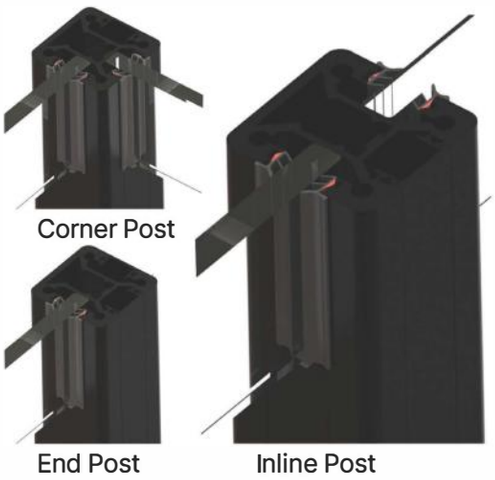

ALPOST-42
ALPOST-50

42" & 50" Base Height - ALL IN ONE - Inline / Corner / End- Square

42" & 50"*

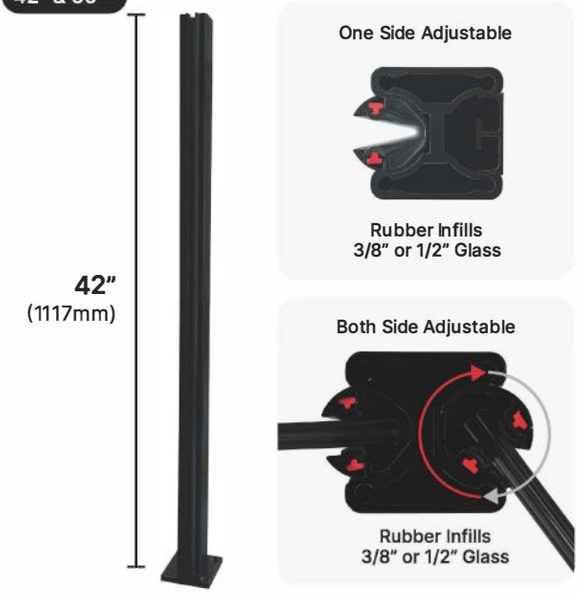

ALPOST-42ADJ

42" Base Height - Adjustable - Square

Modern Elegance Series Accessories

Aluminum Posts

Finishes

Matte Black

More Finishes Online

42"

ALPOST-INFILL
Aluminum Post Component - 42" Length Infills

ALPOST-RUBBER
Rubber Block

AL-HRAIL-ECAPMBL
End Cap For 2-1/2" X 1" Aluminum Handrail

1/2" (12mm)

ALPOST-RUBBER12
Rubber Gasket
For 12mm Glass (42" Length)

3/8" (10mm)

ALPOST-RUBBER10
Rubber Gasket
For 10mm Glass (42" Length)

Square

ALHRAIL-TOOL
Fix Tool For Aluminum Handrail

19' Length

ALHRAIL-2.5X1
Aluminum Handrail
2-1/2" X 1" - 19' Length

GOAT Cable Rail System

Goat Cable Rail System

Architects Recommend

Finishes

- Brushed Anodized Aluminum
- Matte Black Anodized Aluminum
- Brushed Stainless Steel
- Polished Stainless Steel
- More Finishes Online

GCSCABLE100
100ft length Cable - 1/8" thickness - SS316

GCSTENSIONER
Torq Tool Tensioner - Fencing Tool

GCSCUT
Goat Cable Rail System - Cable Cutter

GCSSTUD
Goat Cable Rail System - Stud

GCSKEY
Goat Cable Rail System - Release Key

GCSRWASHER
Goat Cable Rail System - Curved Washer Gasket

2" Post

GCSEND50SS
Fixed Cable End for 2" Post

1-5/8" Post

GCSEND40SS
Fixed Cable End for 1-5/8" Post

GCSENDW
Fixed Cable End for Wood Post

GCSADJEND40SS
Adjustable Cable End for 40mm Post

02 RAILING HARDWARE

Hulk Series

Hydraulic Hinges – Hulk Series

Hulk Series

Architects Recommend

Finishes

- Brushed Stainless
- Matte Black Anodized Aluminum
- Polished Stainless
- More Finishes Online

Wall To Glass

Glass To Glass

Hold Type	Material	SKU
Non Holds Open	SS304	HULK90NHO
Holds Open	SS304	HULK90HO
Non Holds Open	SS316	HULK90NHO
Holds Open	SS316	HULK90HO

Hold Type	Material	SKU
Non Holds Open	SS304	HULK180NHO
Holds Open	SS304	HULK180HO
Non Holds Open	SS316	HULK180NHO
Holds Open	SS316	HULK180HO

* For the most up-to-date product availability, visit our website.

Grey Goat Color Samples Kit

Explore upcoming color finishes on our website.

Frameless Shower Hardware

CH Chrome
BN Brushed Nickel
MBL Matte Black
SB Satin Brass
PN Polished Nickel
BBRZ Brushed Bronze

GM Gun Metal
ORB Oil Rubbed Bronze
W White
AB Antique Brass
PB Polish Brass
Custom Finishes

This color tower was created for one-time distribution only. For the most up-to-date selection of available finishes, please visit our website at ggshardware.com.

Railing Hardware

BSS Brushed Stainless Steel
MBL Matte Black
SB Satin Brass
W White
PSS Polished Stainless Steel
Custom Finishes

Commercial Finishes

SA Satin Anodized
MBL Matte Black
BSS Brushed Stainless Steel
PSS Polished Stainless Steel
SB Satin Brass
Custom Finishes

Future Colors

ABC Antique Brushed Copper
BRG Brushed Rose Gold
SC Satin Chrome
RG Rose Gold
LSB Lacquered Satin Brass
PB Polish Brass
PVDB PVD Black

*These finishes aren't listed on our website yet — but they're available in our color chain. If you're interested, we'd be happy to provide upon request!

Don't have an account?

Sign up now at **GGSHARDWARE.COM** and get approved by one of our representatives same day! Check Page #4 for more info!

Need Help ?

Call our office today and speak to one of our friendly specialist

* For the most up-to-date product availability, visit our website.

Pool Fencing Hardware

Latches with Lock & Floor Lock **160**
Latches with Lock & Brackets **161**
Latches Hinges **162**

Latches with Lock

Pool Fencing Hardware

Designers Selected

Finishes

- Brushed Stainless Steel
- Polished Stainless Steel
- Matte Black Anodized Aluminum
- Custom Finishes

Specification

- **Material:** High-grade SS316 stainless steel.
- **Glass Compatibility:** Fits 8mm, 10mm, and 12mm glass.
- **Application:** Ideal for indoor/outdoor pool fencing.
- **Latch Type:** Various configuration with secure locking.

LDIVE180
180° Glass to Glass

LDIVE90R
90° Round Post to Glass

LDIVE90
90° Wall/Post to Glass

Visit ggshardware.com For Glass Fabrication & Product Information.

LDIVE092IN
90° Glass to Glass - Inswing

LDIVE092OUT
90° Glass to Glass - Outswing

DSDIVE
DIVE Series Pool Fencing Door Stop

BKDIVE
Bottom Keeper

Latches Without Lock

Pool Fencing Hardware

Designers Selected

Finishes

- Brushed Stainless Steel
- Matte Black Anodized Aluminum
- Polished Stainless Steel
- Custom Finishes

Specification

- **Magnetic Latch Mechanism:** Ensures a secure and self-latching system for enhanced safety
- **Premium Material:** SS316 stainless steel for long-lasting durability in harsh environments
- **Glass Compatibility:** Suitable for 8mm, 10mm, and 12mm glass thicknesses
- **Maximum Weight Capacity:** 45kg (100 lbs)
- **Maximum Glass Width:** 40 inches

NLDIVE90W
Glass to Square Post/Wall

NLDIVE180
180° Glass to Glass

NLDIVE90RD
90° Glass to Round Post

NLDIVE90G
Glass to Glass 90° - Inswing

Brackets

BDIVE180RD
180° Glass to Glass - Round

BDIVE180SQ
180° Glass to Glass - Square

BDIVE90
90° Glass to Glass - Round

BDIVESQ90
90° Glass to Glass - Square

Latches Hinges

Pool Fencing Hardware

Designers Selected

Finishes

- Brushed Stainless Steel
- Polished Stainless Steel
- Matte Black Anodized Aluminum
- Custom Finishes

Specification

- **Material:** High-grade SS316 stainless steel for superior corrosion resistance
- **Glass Compatibility:** Supports 8mm, 10mm, and 12mm tempered glass
- **Heavy-Duty Construction:** Enhanced durability for robust glass-to-glass connections
- **Maximum Weight Capacity:** 45kg (100 lbs)
- **Maximum Glass Width:** 40 inches
- **Regulation Compliant:** Meets pool safety standards for residential and non-residential properties

Heavy Duty

HDIVE180HD
Glass To Glass

Heavy Duty

HDIVE90HD
Glass To Wall / Square Post

Heavy Duty

HDIVE90RHD
Glass To Round Post

HDIVE90
Glass to Wall / Square Post

HDIVE180
Glass to Glass
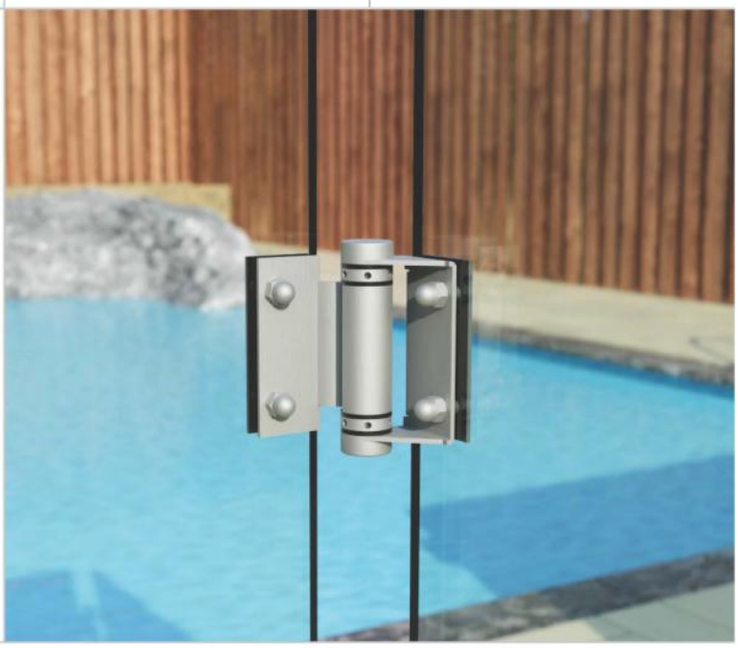
HDIVE90R
Glass to Round Post