SONANCE

BEYOND SOUND

proaudio

Catalogue 2026

Are you mixing with the right company?

SONANCE
BEYOND SOUND

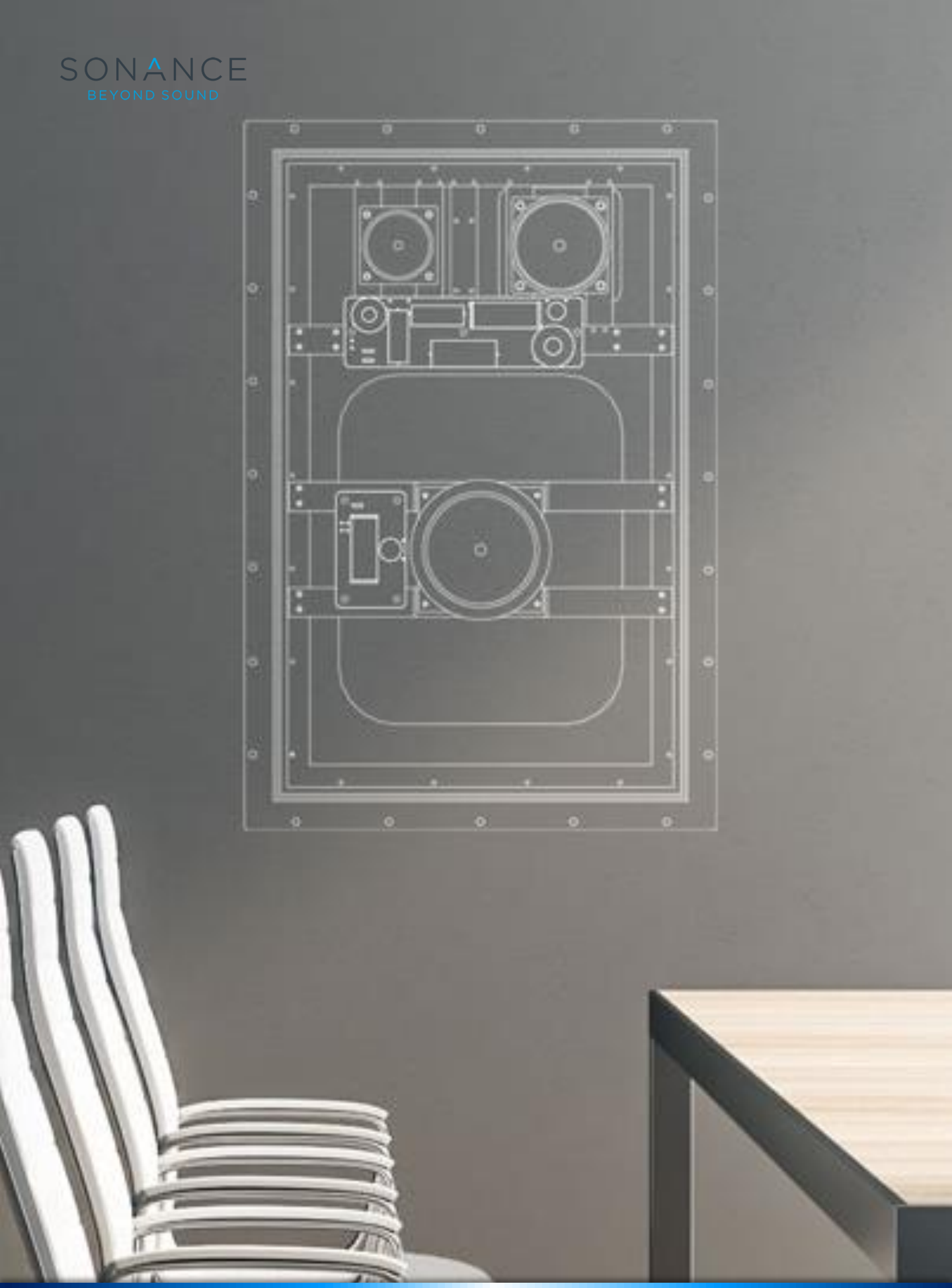

Proaudio Catalogue 2026

SONANCE
BEYOND SOUND

Index

Professional Series 6

In-Ceiling

- PS-C43RT-WH-UNIT 8
- PS-C43RT-WH (PAIR) 9
- PS-C43RTLP (PAIR) 10
- PS-C63RT-WH (PAIR) 11
- PS-C63RTLP (PAIR) 12
- PS-C83RT-WH (PAIR) 13
- PS-C83RWT-WH 14
- PS-C41RT 15
- PS-C61RT 17
- GRILLES & SQ ADAPTERS 19

Pendant

- PS-P43T (PAIR) 21
- PS-P63T (PAIR) 23
- PS-P83T (PAIR) 25
- PS-P83WT-WH (UNIT) 27

Surface Mount

- PS-S43T (PAIR) 30
- PS-S53T (PAIR) 33
- PS-S63T (PAIR) 36
- PS-S83T (PAIR) 39
- PS-83WT (UNIT) 42
- PS-S43T-MKII-WH (UNIT) 44
- PS-S53T-MKII-WH 46
- PS-S63T-MKII (UNIT) 48
- PS-S83T-MKII (UNIT) 50
- PS-S83WT-MKII (UNIT) 52
- PS-S210SUBT 54

Landscape Series

Satellite Speakers

- LS4T-SAT 58
- LS6T-SAT 59

Sub-Woofers

- LS12T-SUB 60
- LS15T-SUB 61
- HS12T-SUB 62
- Omni-6T 63

Invisible Series

- IS6T 66
- IS8T 68

Landscape Accessories

Grilles 72

< Back to Index

Company history

IT ALL STARTED BACK IN 1983…

Our company came to life in 1983 when founders Scott Struthers and Geoff Spencer recognized the need for a groundbreaking new audio solution. No product or system existed that could deliver unsurpassed acoustic performance with minimal visual intrusion. It was this revelation that led them to invent the category of architectural speakers. And the rest is history.

Today, we are still independently owned and operated, and headquartered in San Clemente, California, where it all began. We've worked hard to build an unmatched reputation when it comes to speakers, but we've also created a range of innovative, aesthetically-conscious home and business technology solutions that go far beyond sound.

There are three simple principles that inform everything we do and make. These ideas represent the beliefs that inspired our beginning and still hold true to this day:

Create products that are designed to disappear.

We believe technology should disappear into architecture. This simple philosophy continues to inspire everything we do. Our hidden audio solutions deliver an even, balanced sound experience that is nothing short of magical, blending into and style, installation, or budget.

Cultivate authentic partnerships.

Every day at our home base in San Clemente, CA, you will find passionate, immensely knowledgeable people forging some of the strongest relationships in our industry. From our customer-centric culture to our not-to-be-missed Studio Seminars, we aim to define what authentic partnership looks like. Connecting our strategy and products to your company, we help unlock the most value possible for your business. Our team is your team.

Build upon our strong heritage of innovation.

The history of our independently-owned company is rooted in a deep knowledge of our customers and construction. From high-performance, award-winning audio solutions to our unique TRUFIG mounting technology to innovative IPORT products that hold, charge and protect tablets, customers rely on our culture of creativity to continue to push the boundaries of technology and design.

We invite you to connect with our team, learn more about all of our products, or even plan a visit to see it all for yourself.

Discover what we mean when we say SONANCE: Beyond Sound.

Industry Recognition

When it comes to the custom installation industry, no other company has consistently received more recognition and accolades than SONANCE. Celebrating 35 years in the industry as a recognized leader, SONANCE is proud of its achievements and continues to strive for innovation excellence.

With six CEDIA (Custom Electronics Design and Installation Association) “Hall of Fame” awards, SONANCE is recognized as the inventor of both the Architectural Speaker and the Invisible Speaker categories.

SONANCE is also the only company to have won over eleven highly coveted CEDIA “Best new Product” awards over the years. In addition, founder Scott Struthers has received the prestigious CEDIA “Lifetime Achievement” award for his contributions to the industry. Recognition goes far beyond its peers, with SONANCE achieving a host of awards from architect and Interior designer industry groups, global media and critics alike.

While these accomplishments and recognition validate SONANCE, it is the commitment to lead, invent and reinvent that established it as *the* marquee of the industry and will continue as its foundation of success into the future.

2021
CEPro Best New Product Award:
Sonance IS15W - The World's First Invisible Subwoofer

2020
CEDIA Hall of Fame Award:
Sonance Landscape Series

2020
CEDIA Best New Product Award:
Sonance Invisible Series Featuring Motion Flex Technology

2018
CEPro Best New Product Award:
VP52R UTL

2018
CEDIA Hall of Fame Award: LaunchPort

2018
CEDIA Hall of Fame Award: TRUFIG

2017
CEPro Best New Product Award:
iPort xPress

2017
CEDIA Hall of Fame Award:
Visual Performance Series Speakers

2016
Residential Systems Best of Show:
Sonance Professional Series

< Back to Index

Professional Series

From Sonance, the company that invented the architectural audio category comes a range of professional loudspeakers that set a new benchmark in sound quality and aesthetics for commercial environments.

Sonance Professional Series includes a range of 70V, 100V, 8 Ohm selectable In-Ceiling, Pendant and Surface Mount Speakers that deliver unequalled fidelity, extremely low distortion, wide dispersion and exceptional reliability.

The range also shares consistent voicing, ensuring seamless sonic integration when used together throughout a space.

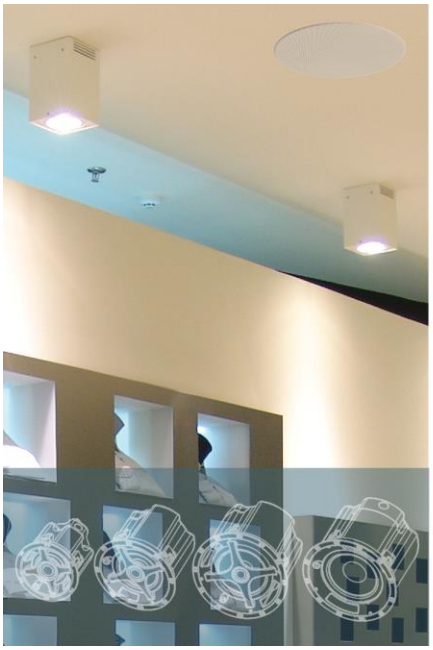

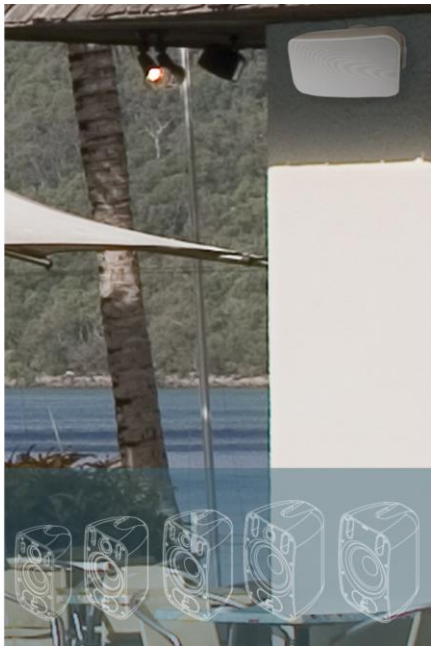

< Back to Index

In-Ceiling Speakers

Performance

Sonance Professional Series has been engineered with a level of attention to detail not typically seen in the commercial audio industry.

The range features a full-fidelity transformer for uncompromised 70V/100V performance, heavy duty voice coils for reliability at high SPL, high excursion woofer for extended bass extension and chambered 1" pivoting tweeter for precise high-end detail and exceptional off-axis performance.

Available in 4", 4" Low Profile, 6.5", 6.5" Low Profile, 8" 2-Way and an 8" Woofer. An additional lower-cost 4" and 6.5" provide the benefits of Professional Series in budget-conscious projects.

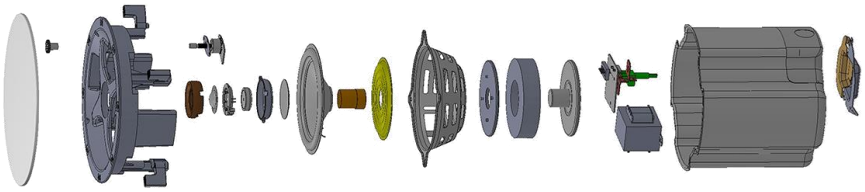

Aesthetics

Sonance Professional Series In-Ceiling Speakers feature a bezel-less grille design to minimize visual distraction and reduce shadow lines.

The optional black or white square grille adapter allows the speakers to match the aesthetic of downlights or HVAC grilles.

Black grilles in round or square are also available, eliminating the need to order a specific black speaker.

Installation

A one-piece grille allows for a one-step painting process, while the magnetic retention simplifies installation and reduces the risk of damage during fitment and removal.

The sealed enclosure incorporates cable and conduit clamping and knock-out. An easily-accessible Euroblock connector provides input and loop through connections, while the seismic attachment provides added security when used in suspended ceiling applications.

< Back to Index

In-Ceiling Range

Professional Series 4" In-Ceiling Speaker

PS-C43RT-WH-UNIT 4" In-Ceiling Speaker

Sonance Professional Series PS-C43RT is a 70V/100V/8 Ohm selectable In-Ceiling Speaker that features a one-piece bezel-less grille that is magnetically secured and allows for a one-step painting process to simplify installation and minimize visual distraction.

The optional Square Grille Adapter allows speakers to match the aesthetic of square downlights and HVAC grilles to achieve continual sight lines.
A high-excursion 4” polypropylene woofer delivers effortless low bass extension, that exceeds most 6.5" and even 8" competitive products, while the pivoting chambered 1” soft dome tweeter can be directed to ensure accurate coverage, when speaker positioning is compromised.

A full-fidelity transformer delivers uncompromised sonic performance in either high (70V, 100V) or low (8 Ohm) impedance.

The PS-C43RT features a sealed metal enclosure, integrated cable and conduit clamping, removable Euroblock connector with loop-through, swing-open connecter cover and seismic attachment.

Dimensional Sketches Specifications

PS-C43RT Loudspeaker

Diameter:	6.3″ (160mm)
Depth:	7.01″ (178mm)
Cut Out Diameter:	5.875″ (149mm)

With Grille

Diameter:	6.3″ (160mm)

With Square Adapter and Grille

Width:	6.36″ (162mm)
Height:	6.36″ (162mm)

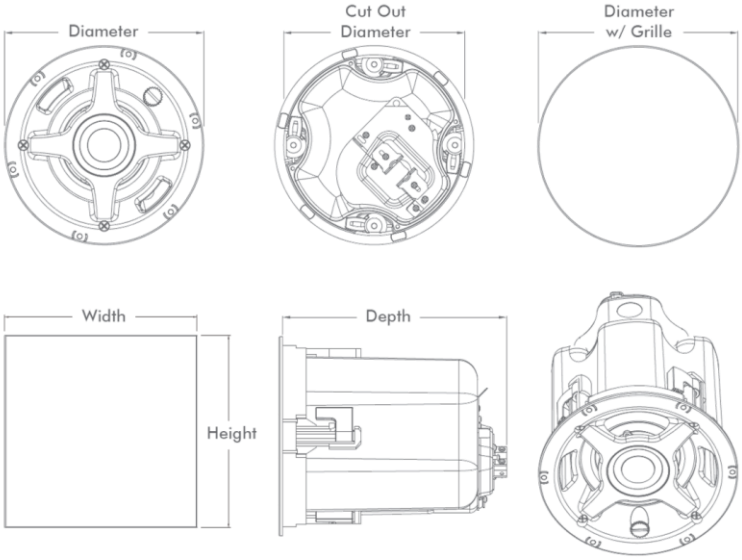

< Back to Index

In-Ceiling Range

Professional Series 4" In-Ceiling Speaker

PS-C43RT-WH 4" In-Ceiling Speaker Pair

Sonance Professional Series PS-C43RT is a 70V/100V/8 Ohm selectable In-Ceiling Speaker that features a one-piece bezel-less grille that is magnetically secured and allows for a one-step painting process to simplify installation and minimize visual distraction.

The optional Square Grille Adapter allows speakers to match the aesthetic of square downlights and HVAC grilles to achieve continual sight lines.
A high-excursion 4” polypropylene woofer delivers effortless low bass extension, that exceeds most 6.5" and even 8" competitive products, while the pivoting chambered 1” soft dome tweeter can be directed to ensure accurate coverage, when speaker positioning is compromised.

A full-fidelity transformer delivers uncompromised sonic performance in either high (70V, 100V) or low (8 Ohm) impedance.

The PS-C43RT features a sealed metal enclosure, integrated cable and conduit clamping, removable Euroblock connector with loop-through, swing-open connecter cover and seismic attachment.

Dimensional Sketches Specifications

PS-C43RT Loudspeaker

Diameter:	6.3″ (160mm)
Depth:	7.01″ (178mm)
Cut Out Diameter:	5.875″ (149mm)

With Grille

Diameter:	6.3″ (160mm)

With Square Adapter and Grille

Width:	6.36″ (162mm)
Height:	6.36″ (162mm)

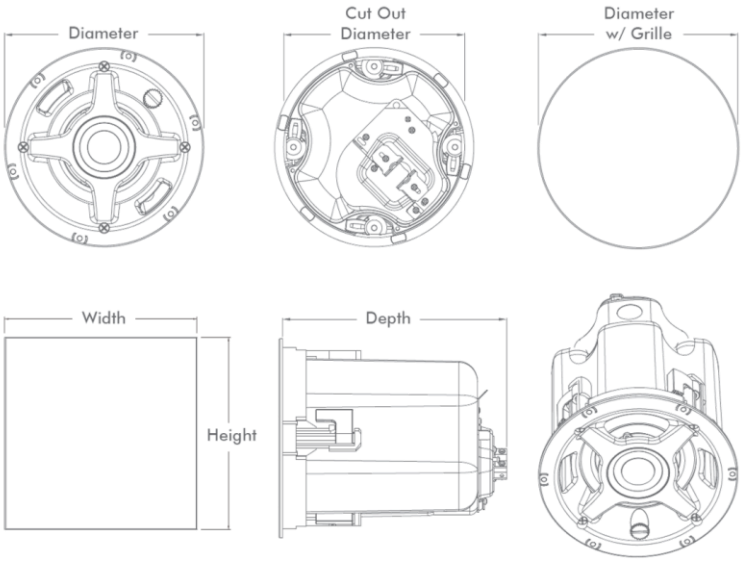

< Back to Index

In-Ceiling Range

Professional Series 4" Low Profile Speaker

PS-C43RTLP Pair 4" Low Profile In-Ceiling Pair

Sonance Professional Series PS-C43RTLP is a 70V/100V/8 Ohm selectable In-Ceiling Speaker that features a shallow 3.43” (87mm) construction for installations in restricted spaces such as beneath HVAC ducting or in 2’x4’ stud bays. It also features a one-piece bezel-less grille that is magnetically secured and allows for a one-step painting process to simplify installation and minimize visual distraction.

The optional Square Grille Adapter allows speakers to match the aesthetic of square downlights and HVAC grilles to achieve continual sight lines, as well providing an excellent solution for in-wall installations.

A high-excursion 4” polypropylene woofer delivers effortless low bass extension, even at high volumes, while the pivoting chambered 1” soft dome tweeter can be directed to ensure accurate coverage, when speaker positioning is compromised.

Dimensional Sketches Specifications

PS-C43RTLP Loudspeaker

Diameter:	9.13″ (232mm)
Depth:	3.43″ (87mm)
Cut Out Diameter:	8.25″ (210mm)

With Grille

Diameter:	9.13″ (232mm)

With Square Adapter and Grille

Width:	9.23″ (235mm)
Height:	9.23″ (235mm)

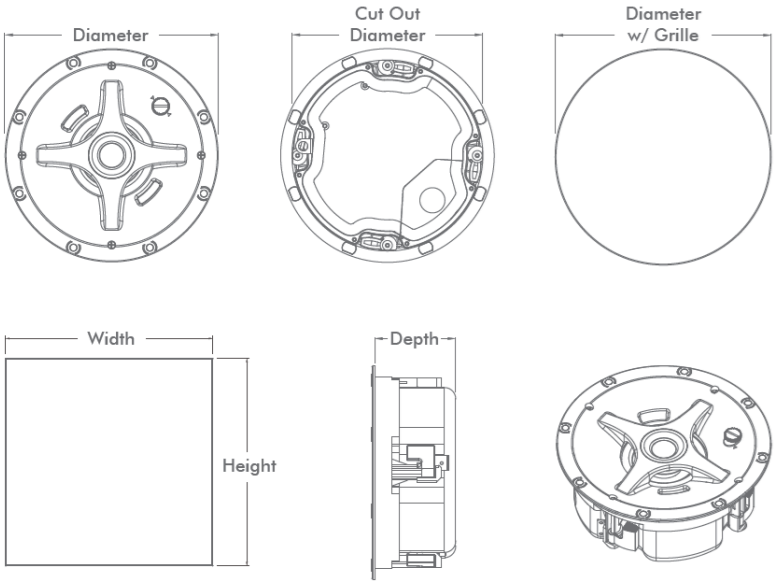

In-Ceiling Range

Professional Series 6.5" In-Ceiling Speaker

PS-C63RT-WH 6.5" In-Ceiling Pair

Sonance Professional Series PS-C63RT-WH is a 70V/100V/8 Ohm selectable In-Ceiling Speaker that features a one-piece bezel-less grille that is magnetically secured and allows for a one-step painting process to simplify installation and minimize visual distraction.

The optional Square Grille Adapter allows speakers to match the aesthetic of square downlights and HVAC grilles to achieve continual sight lines.
A high-excursion 6” polypropylene woofer delivers effortless low bass extension, that exceeds most 8" competitive products, while the pivoting chambered 1” soft dome tweeter can be directed to ensure accurate coverage, when speaker positioning is compromised.

A full-fidelity transformer delivers uncompromised sonic performance in either high (70V, 100V) or low (8 Ohm) impedance.

The PS-C63RT features a sealed metal enclosure, integrated cable and conduit clamping, removable Euroblock connector with loop-through, swing-open connecter cover and seismic attachment.

Dimensional Sketches Specifications

PS-C63RT Loudspeaker

Diameter:	9.13″ (232mm)
Depth:	8.86″ (225mm)
Cut Out Diameter:	8.25″ (210mm)

With Grille

Diameter:	9.13″ (232mm)

With Square Adapter and Grille

Width:	9.23″ (235mm)
Height:	9.23″ (235mm)

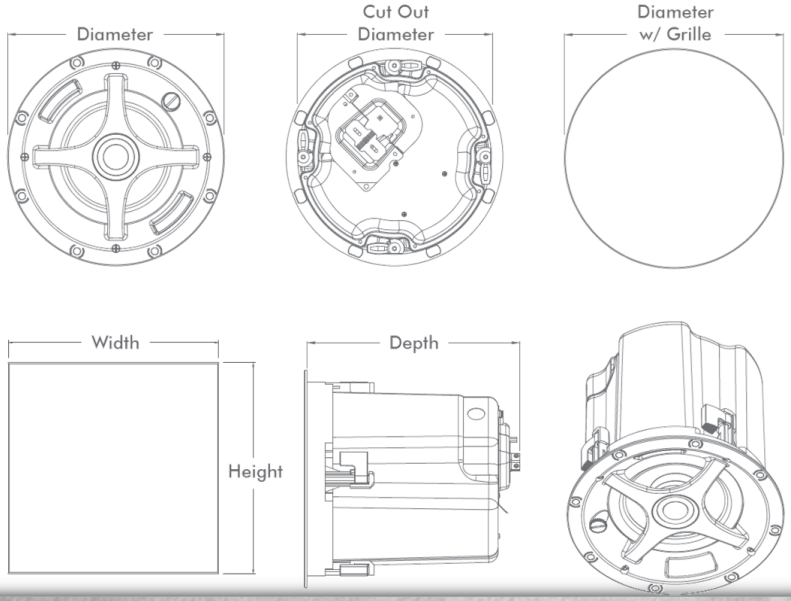

< Back to Index

In-Ceiling Range

Professional Series 6.5" Low Profile Speaker

PS-C63RTLP 6.5" Low Profile In-Ceiling Speaker Pair

Sonance Professional Series PS-C63RTLP is a 70V/100V/8 Ohm selectable In-Ceiling Speaker that features a shallow 4.37” (111mm) construction for installations in restricted spaces such as beneath HVAC ducting. It also features a one-piece bezel-less grille that is magnetically secured and allows for a one-step painting process to simplify installation and minimize visual distraction.

The optional Square Grille Adapter allows speakers to match the aesthetic of square downlights and HVAC grilles to achieve continual sight lines.

A high-excursion 6.5” polypropylene woofer delivers effortless low bass extension, even at high volumes, while the pivoting chambered 1” soft dome tweeter can be directed to ensure accurate coverage, when speaker positioning is compromised.

The PS-C63RTLP features a sealed metal enclosure with back and side knock-outs, removable Euroblock connector with loop-through, and seismic attachment.

Dimensional Sketches Specifications

PS-C63RTLP Loudspeaker

Diameter:	11.06″ (281mm)
Depth:	4.37″ (111mm)
Cut Out Diameter:	10.125″ (257mm)

With Grille

Diameter:	11.06″ (281mm)

With Square Adapter and Grille

Width:	11.14″ (283mm)
Height:	11.14″ (283mm)

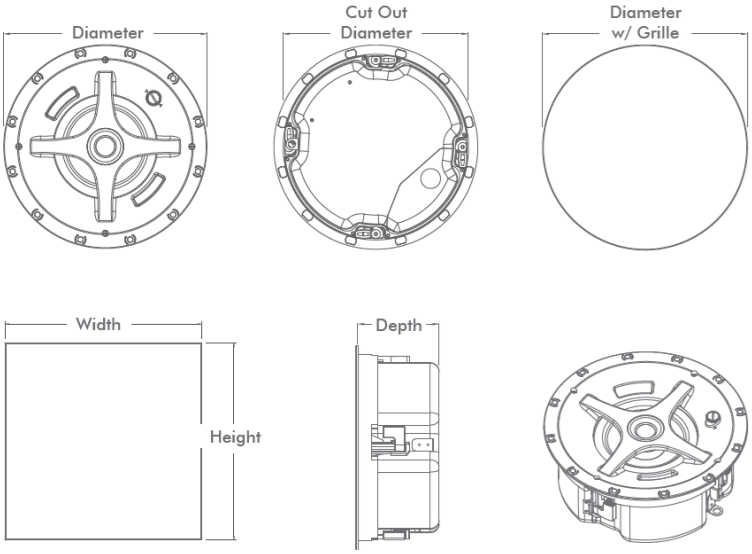

< Back to Index

In-Ceiling Range

Professional Series 8" In-Ceiling Speaker

PS-C83RT-WH 8" In-Ceiling Pair

Sonance Professional Series PS-C83RT-WH is a 70V/100V/8 Ohm selectable In-Ceiling Speaker that features a one-piece bezel-less grille that is magnetically secured and allows for a one-step painting process to simplify installation and minimize visual distraction.

The optional Square Grille Adapter allows speakers to match the aesthetic of square downlights and HVAC grilles to achieve continual sight lines.
A high-excursion 8” polypropylene woofer delivers effortless low bass extension, even at high volumes, negating the need for additional woofers, while the pivoting chambered 1” soft dome tweeter can be directed to ensure accurate coverage, when speaker positioning is compromised.

A full-fidelity transformer delivers uncompromised sonic performance in either high (70V, 100V) or low (8 Ohm) impedance.

The PS-C83RT features a sealed metal enclosure, integrated cable and conduit clamping, removable Euroblock connector with loop-through, swing-open connecter cover and seismic attachment.

Dimensional Sketches Specifications

PS-C83RT Loudspeaker

Diameter:	11.06” (281mm)
Depth:	9.84” (250mm)
Cut Out Diameter:	10.125” (257mm)

With Grille

Diameter:	11.06” (281mm)

With Square Adapter and Grille

Width:	11.14” (283mm)
Height:	11.14” (283mm)

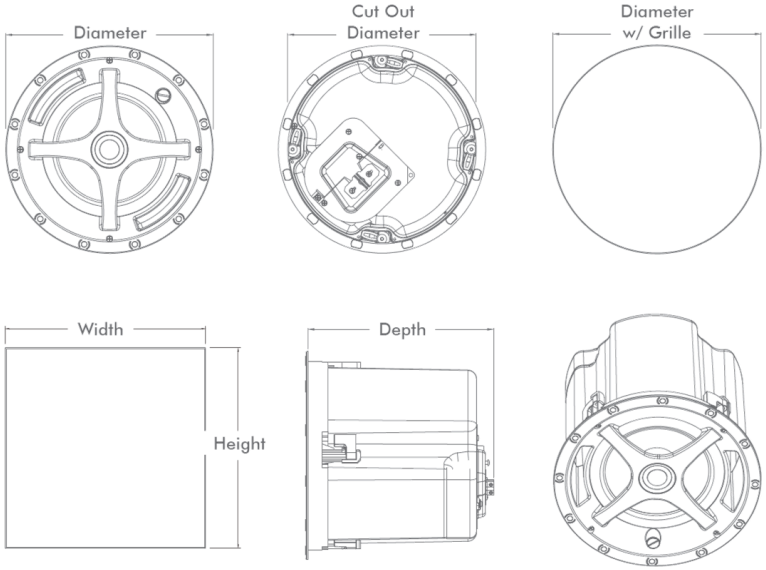

< Back to Index

In-Ceiling Range

Professional Series 8" In-Ceiling Woofer

PS-C83RWT-WH 8" In-Ceiling Woofer

Sonance Professional Series PS-C83RWT-WH is a 70V/100V/8 Ohm selectable In-Ceiling Woofer that features a one-piece bezel-less grille that is magnetically secured and allows for a one-step painting process to simplify installation and minimize visual distraction.

The optional Square Grille Adapter allows speakers to match the aesthetic of square downlights and HVAC grilles to achieve continual sight lines.
An ultra-high-excursion 8” polypropylene woofer delivers effortless and impactful low bass extension and augmentation, at any sound pressure level, making it the perfect partner for the PS-C43RT and PS-C63RT In-Ceiling Speakers.

A full-fidelity transformer delivers uncompromised sonic performance in either high (70V, 100V) or low (8 Ohm) impedance.

The PS-C83RWT features a sealed metal enclosure, integrated cable and conduit clamping, removable Euroblock connector with loop-through, swing-open connecter cover and seismic attachment.

Dimensional Sketches Specifications

PS-C83RWT Loudspeaker

Diameter:	11.06″ (281mm)
Depth:	9.84″ (250mm)
Cut Out Diameter:	10.125″ (257mm)

With Grille

Diameter:	11.06″ (281mm)

With Square Adapter and Grille

Width:	11.14″ (283mm)
Height:	11.14″ (283mm)

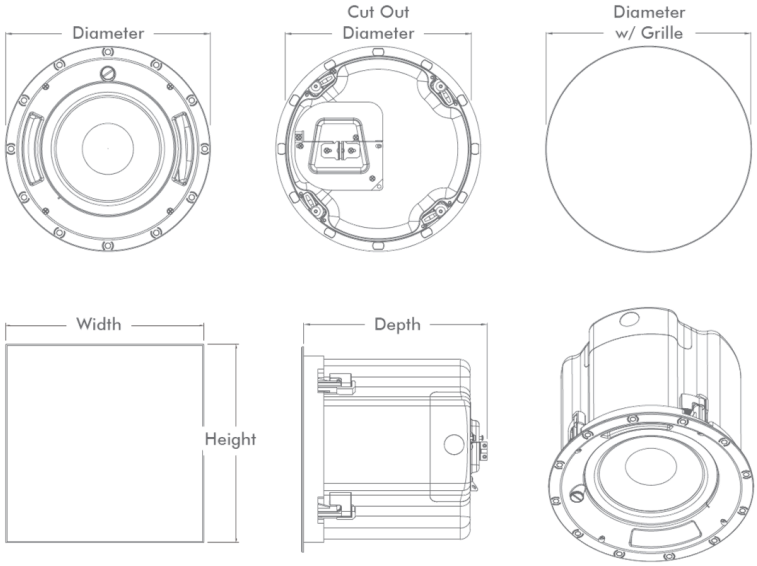

In-Ceiling Range

Professional Series 4" In-Ceiling Speaker

PS-C41RT 4" In-Ceiling Speaker

Sonance Professional Series PS-C41RT is a 70V/100V/8 Ohm selectable In-Ceiling Speaker that features a one-piece bezel-less grille that is magnetically secured and allows for a one-step painting process to simplify installation and minimize visual distraction.

The optional Square Grille Adapter allows speakers to match the aesthetic of square downlights and HVAC grilles to achieve continual sight lines.

The PS-C41RT features a 4” polypropylene cone, butyl rubber surround woofer combined with a coaxially mounted .75” cloth dome, ferrofluid cooled high tweeter.

The PS-C41RT features extremely flat response for natural musically and intelligibility for voice, making it perfect for shopping malls, airports, schools, corporate, government, or anywhere an affordably-priced, aesthetically pleasing, and excellent sounding loudspeaker is required.

A full-fidelity transformer delivers uncompromised sonic performance in either high (70V, 100V) or low (8 Ohm) impedance.

EN54
Compliant

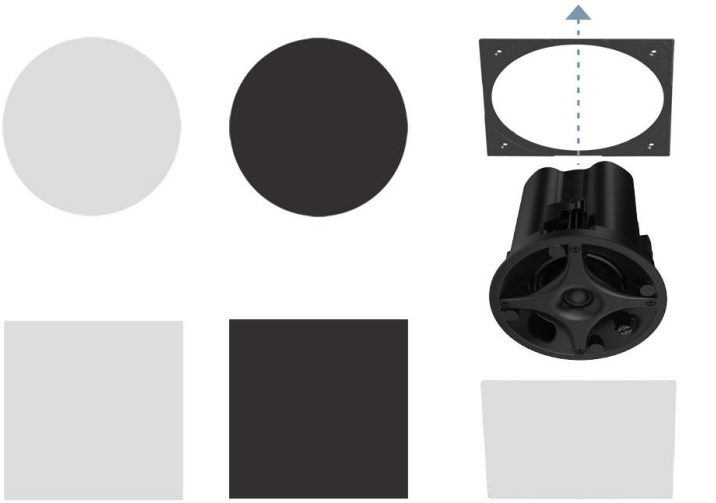

< Back to Index

DIMENSIONAL SKETCHES SPECIFICATIONS

PS-C41RT Loudspeaker
Diameter: 6.3” (160mm)
Depth: 6.5” (165mm)

Cut Out
Diameter: 5.875” (149mm)

With Grille
Diameter: 6.3” (160mm)

With Square Adapter and Grille
Width: 6.36” (162mm)
Height: 6.36” (162mm)

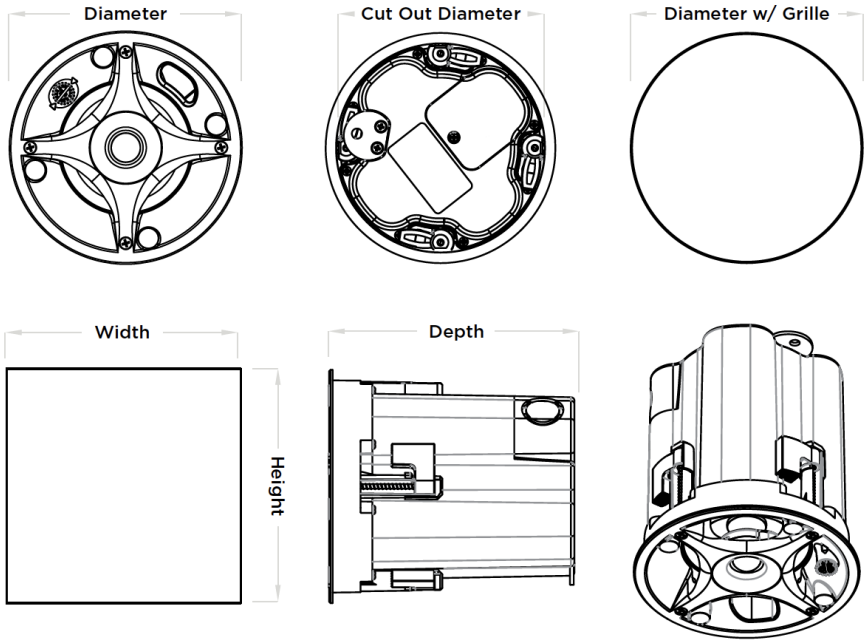

Frequency Range (-10dB)	• 70Hz – 25khz
Frequency Range (-3dB)	• 95Hz – 20kHz
Power Capacity	• 60 Watts Continuous Program Power | 30 Watts Continuous Pink Noise
Nominal Sensitivity	• 87dB
Nominal Coverage Angle	• 120 degrees conical coverage
Directivity Factor (Q)	• 7.6
Directivity (DI)	• 8.1dB
Rated Maximum SPL	• 102dB @ 1 meter (3.3 feet) average, 108dB peak
Rated Impedance	• 8 Ohms nominal, 6 Ohms minimum
Transformer Taps	• 25W, 12.5W, 6.3W and (3.2W @70V)
Crossover Point	• 3000Hz
Overall Dimensions	• 6.3" x 6.5” deep (160mm x 165mm)
Cut Out Dimensions	• 5.875" Diameter (149mm)
Net Weight	• 5.0lbs (2.27kg) ea
Shipping Weight	• 21.55lbs (9.77kg) pair
Unit of Measure	• Pair (Single units upon request)
Grille	• Supplied with bezel-less white grille. Optional black grille, or square adapter with black or white grille
LF Driver	• 4" (100mm) Polypropylene Cone, Butyl Rubber Surround
HF Driver	• .75" (19mm) Cloth dome, Ferrofluid cooled
Input Connector	• Four pin, Euroblock with loop output connections
Knockout	• Single .75" with cable relief
Safety Agency	• UL 2043, UL 1480, NFPA 90A and NFPA 70, S7232, (EN54-24 coming soon)
Ceiling Thickness Range	• .125” - 2.0” (3mm - 50mm)
Suspension Points	• One, on top surface
Included Accessories	• Bracket/Tile Bridge

In-Ceiling Range

Professional Series 6" In-Ceiling Speaker

PS-C61RT 6" In-Ceiling Speaker

Sonance Professional Series PS-C61RT is a 70V/100V/8 Ohm selectable In-Ceiling Speaker that features a one-piece bezel-less grille that is magnetically secured and allows for a one-step painting process to simplify installation and minimize visual distraction.

The optional Square Grille Adapter allows speakers to match the aesthetic of square down lights and HVAC grilles to achieve continual sight lines.

The PS-C61RT features a 6.5” polypropylene cone, butyl rubber surround woofer combined with a coaxially mounted .75” cloth dome, ferrofluid cooled high tweeter.

The PS-C61RT features extremely flat response for natural musically and intelligibility for voice, making it perfect for shopping malls, airports, schools, corporate, government, or anywhere an affordably-priced, aesthetically pleasing, and excellent sounding loudspeaker is required.

A full-fidelity transformer delivers uncompromised sonic performance in either high (70V, 100V) or low (8 Ohm) impedance.

EN54
Compliant

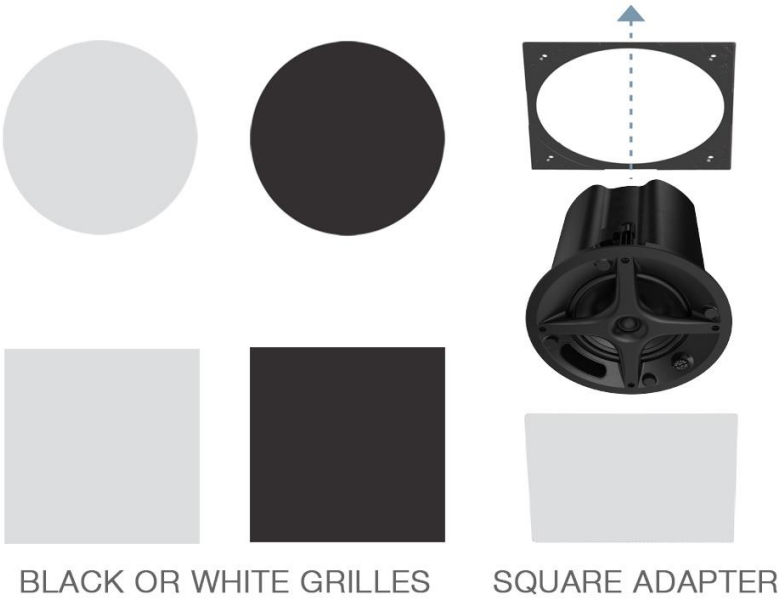

< Back to Index

DIMENSIONAL SKETCHES SPECIFICATIONS

PS-C61RT Loudspeaker
Diameter: 9.13” (232mm)
Depth: 8.86” (225mm)

Cut Out
Diameter: 8.25” (210mm)

With Grille
Diameter: 9.13” (232mm)

With Square Adapter and Grille
Width: 9.23” (235mm)
Height: 9.23” (235mm)

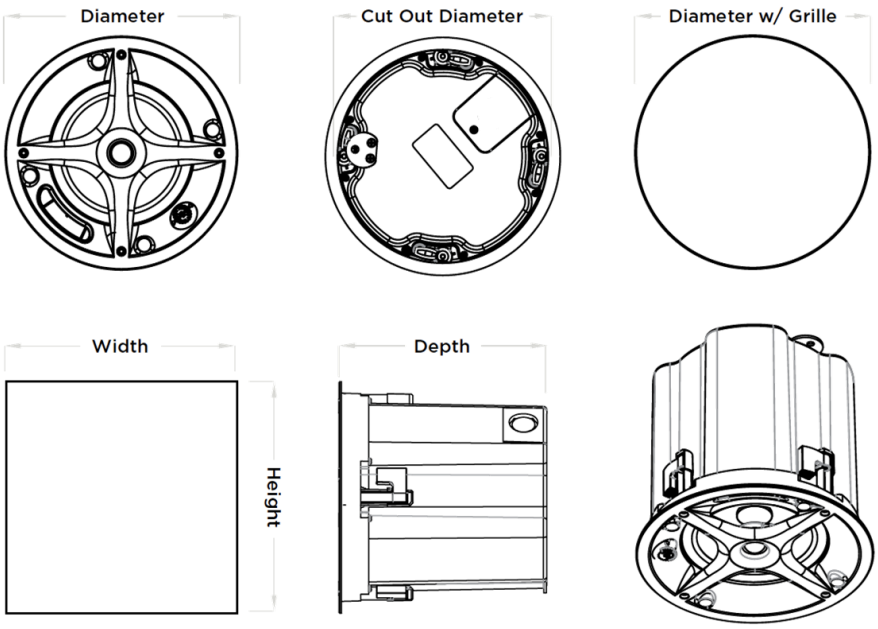

Frequency Range (-10dB)	• 60Hz – 25khz
Frequency Range (-3dB)	• 83Hz – 20kHz
Power Capacity	• 100 Watts Continuous Program Power | 50 Watts Continuous Pink Noise
Nominal Sensitivity	• 91 dB
Nominal Coverage Angle	• 120 degrees conical coverage
Directivity Factor (Q)	• 7.8
Directivity (DI)	• 8.2 dB
Rated Maximum SPL	• 108dB @ 1 meter (3.3 feet) average, 116dB peak
Rated Impedance	• 8 Ohms nominal, 6 Ohms minimum
Transformer Taps	• 32W, 16W, 8W and (4W @70V)
Crossover Point	• 2750Hz
Overall Dimension	• 9.13" x 8.86” deep (232mm x 225mm)
Cut Out Dimension	• 8.25" (210mm)
Net Weight	• 6.88 lbs (3.12kg) each
Shipping Weight	• 27.35 lbs (12.41kg) pair
Unit of Measure	• Pair (Single, upon request)
Grille	• Supplied with bezel-less white grille. Optional black grille, or square adapter with black or white grille
LF Driver	• 6.5" (165mm) Polypropylene Cone, Butyl Rubber Surround
HF Driver	• .75" (19mm) Cloth dome, Ferrofluid cooled
Input Connector	• Four pin, Euroblock with loop output connections
Knockout	• Single .75"
Safety Agency	• UL 2043, UL 1480, NFPA 90A and NFPA 70, S7232, (EN54-24 coming soon)
Ceiling Thickness Range	• .125” - 2.0” (3mm - 50mm)
Suspension Points	• One, on top surface
Included Accessories	• Bracket/Tile Bridge

< Back to Index

In-Ceiling Range

Grilles and SQ Adapters

PS-C43/P43 BLACK Pair
The Sonance GRILLE PS-C43/P43-BK is a black grille for 4" PS-C43RT in-ceiling speakers that protects sound and enhances appearance.

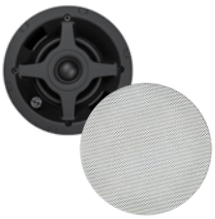

PS-C43/P43 WHITE Pair
The Sonance GRILLE PS-C43/P43-BK is a black grille for 4" PS-C43RT in-ceiling speakers that protects sound and enhances appearance.

PS-C63/P63 BLACK Pair
The Sonance GRILLE PS-C43/P43-BK is a black grille for 4" PS-C43RT in-ceiling speakers that protects sound and enhances appearance.

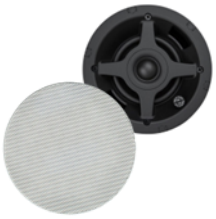

PS-C63/P63 WHITE Pair
The Sonance GRILLE PS-C43/P43-BK is a black grille for 4" PS-C43RT in-ceiling speakers that protects sound and enhances appearance.

PS-C83/P83 BLACK Pair
The Sonance GRILLE PS-C43/P43-BK is a black grille for 4" PS-C43RT in-ceiling speakers that protects sound and enhances appearance.

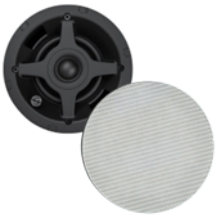

PS-C83/P83 WHITE Pair
The Sonance GRILLE PS-C43/P43-BK is a black grille for 4" PS-C43RT in-ceiling speakers that protects sound and enhances appearance.

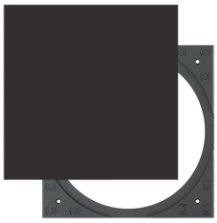

SQ ADAPTER PS-C43R BLACK W/GRILLE PR Pair
The Sonance GRILLE PS-C43/P43-BK is a black grille for 4" PS-C43RT in-ceiling speakers that protects sound and enhances appearance.

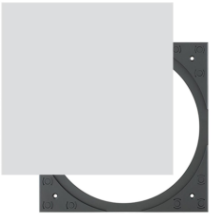

SQ ADAPTER PS-C43R WHITE W/GRILLE PR Pair
The Sonance GRILLE PS-C43/P43-BK is a black grille for 4" PS-C43RT in-ceiling speakers that protects sound and enhances appearance.

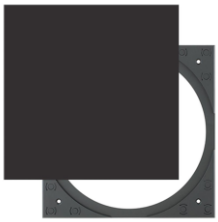

SQ ADAPTER PS-C63R BLACK W/GRILLE PR Pair
The Sonance GRILLE PS-C43/P43-BK is a black grille for 4" PS-C43RT in-ceiling speakers that protects sound and enhances appearance.

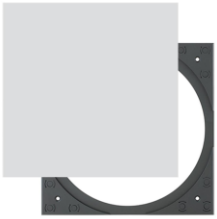

SQ ADAPTER PS-C63R WHITE W/GRILLE PR Pair
The Sonance GRILLE PS-C43/P43-BK is a black grille for 4" PS-C43RT in-ceiling speakers that protects sound and enhances appearance.

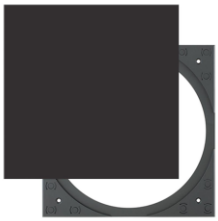

SQ ADAPTER PS-C83R/83RW BW/GRILLE PR Pair
The Sonance GRILLE PS-C43/P43-BK is a black grille for 4" PS-C43RT in-ceiling speakers that protects sound and enhances appearance.

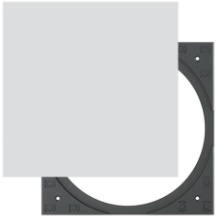

SQ ADAPTER PS-C83R/83RW WW/GRILLE PR Pair
The Sonance GRILLE PS-C43/P43-BK is a black grille for 4" PS-C43RT in-ceiling speakers that protects sound and enhances appearance.

< Back to Index

Pendant Speakers

Performance

Sonance Professional Series has been engineered with a level of attention to detail not typically seen in the commercial audio industry.

The range features a full-fidelity transformer for uncompromised 70V/100V performance, heavy duty voice coils for reliability at high SPL, high excursion woofer for extended bass extension and chambered 1" pivoting tweeter for precise high-end detail and exceptional off-axis performance.

Available in 4", 6.5", 8" 2-Way and an 8" Woofer.

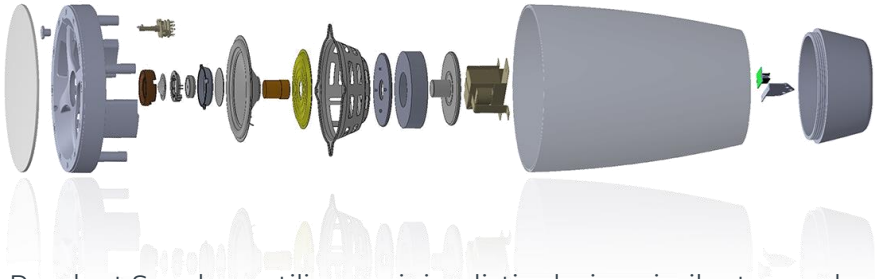

Aesthetics

These elegant Pendant Speakers utilize a minimalistic design similar to pendant lighting to blend discreetly into the environment. Available in black or white and can also be painted to match decor.

They also take advantage of the same one-piece grille design as the In-Ceiling Speakers in the range to deliver consistent sight lines when installed in the same space.

The unique integrated top cover hides the hanging hardware and wiring connector making them perfect for installation where they may be viewed from above.

Installation

Sonance Professional Series Pendant Speakers are supplied with hanging hardware kits that includes two 15' stainless steel suspension cables with snap hook and two Gripple® hangers to ensure a safe and secure installation.

The front-mounted tap selector makes it easier to adjust the speaker once installed.

Pendant Range

Professional Series 4“ 60Watt Pendant Speaker

PS-P43T-BK 4" Pendant (Pair)

Sonance Professional Series PS-P43T-BK Pendant Speaker utilizes a minimalistic design similar to pendant lighting to blend discreetly into the environment, and take advantage of the same one-piece grille design as the In-Ceiling Speakers to deliver consistent sight lines when installed in the same space.

The integrated top cover hides the hanging hardware and wiring connector.

A high-excursion 4” polypropylene woofer delivers effortless low bass extension, that exceeds most 6.5" and even 8" competitive products, while the pivoting chambered 1” soft dome tweeter can be directed to ensure accurate coverage, when speaker positioning is compromised.

A full-fidelity transformer delivers uncompromised sonic performance in either high (70V, 100V) or low (8 Ohm) impedance.

Dimensional Sketches Specifications

PS-P43T Loudspeaker

Diameter: Bottom:	6.3″ (160mm)
Diameter Top:	3.673″ (93mm)
Depth:	11″ (280mm)
With Grille Diameter:	6.3″ (160mm)

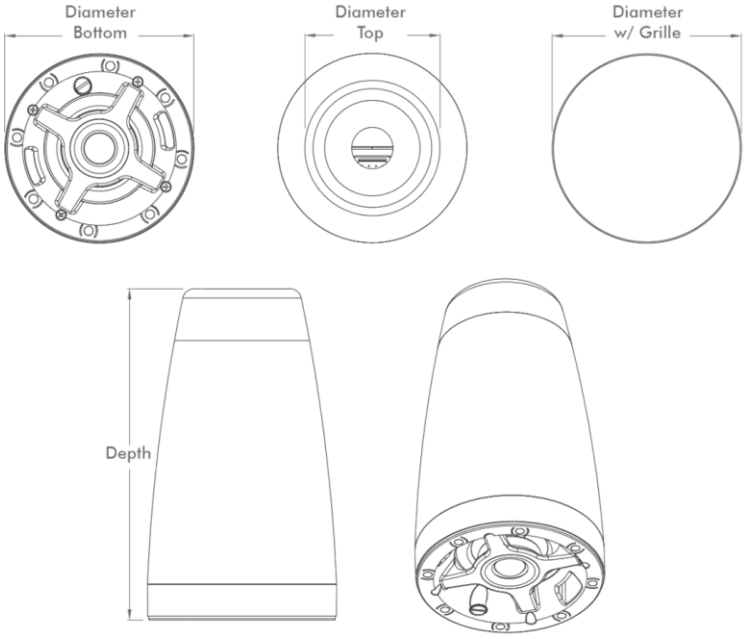

Pendant Range

Professional Series 4“ 60Watt Pendant Speaker

PS-P43T-WH 4" Pendant (Pair)

Sonance Professional Series PS-P43T-WH Pendant Speaker utilizes a minimalistic design similar to pendant lighting to blend discreetly into the environment, and take advantage of the same one-piece grille design as the In-Ceiling Speakers to deliver consistent sight lines when installed in the same space.

The integrated top cover hides the hanging hardware and wiring connector.

A high-excursion 4” polypropylene woofer delivers effortless low bass extension, that exceeds most 6.5" and even 8" competitive products, while the pivoting chambered 1” soft dome tweeter can be directed to ensure accurate coverage, when speaker positioning is compromised.

A full-fidelity transformer delivers uncompromised sonic performance in either high (70V, 100V) or low (8 Ohm) impedance.

Dimensional Sketches Specifications

PS-P43T Loudspeaker

Diameter: Bottom:	6.3″ (160mm)
Diameter Top:	3.673″ (93mm)
Depth:	11″ (280mm)
With Grille Diameter:	6.3″ (160mm)

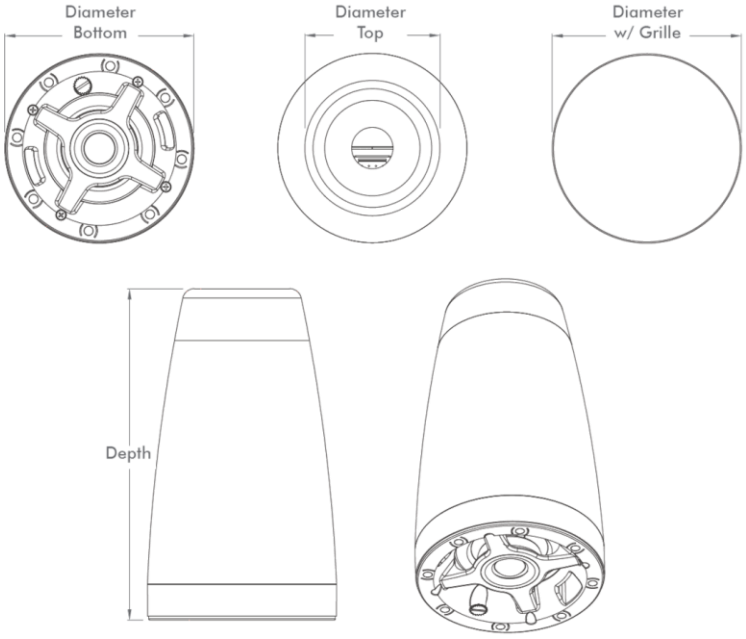

< Back to Index

Pendant Range

Professional Series 6.5" 120Watt Pendant Speaker

PS-P63T BLACK 6.5" Pendant (Pair)

Sonance Professional Series PS-P63T BLACK is a 70V/100V/8 Ohm selectable Pendant Speaker that utilizes a minimalistic design similar to pendant lighting to blend discreetly into the environment. It takes advantage of the same one-piece grille design as the In-Ceiling Speakers to deliver consistent sight lines when installed in the same space.

The integrated top cover hides the hanging hardware and wiring connector.

A high-excursion 6” polypropylene woofer delivers effortless low bass extension, that exceeds most 8" competitive products, while the pivoting chambered 1” soft dome tweeter can be directed to ensure accurate coverage, when speaker positioning is compromised.

A full-fidelity transformer delivers uncompromised sonic performance in either high (70V, 100V) or low (8 Ohm) impedance.

Dimensional Sketches Specifications

PS-P63T Loudspeaker

Diameter: Bottom:	9.13” (232mm)
Diameter Top:	4.795” (122mm)
Depth:	15.6” (396mm)
With Grille Diameter:	9.13” (232mm)

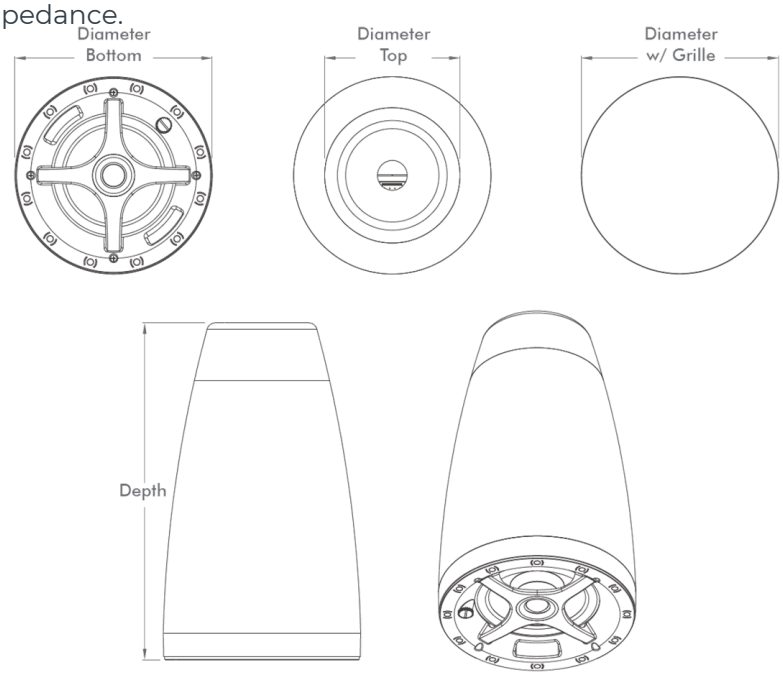

< Back to Index

Pendant Range

Professional Series 6.5" 120Watt Pendant Speaker

PS-P63T WHITE 6.5" Pendant (Pair)

Sonance Professional Series PS-P63T BLACK is a 70V/100V/8 Ohm selectable Pendant Speaker that utilizes a minimalistic design similar to pendant lighting to blend discreetly into the environment. It takes advantage of the same one-piece grille design as the In-Ceiling Speakers to deliver consistent sight lines when installed in the same space.

The integrated top cover hides the hanging hardware and wiring connector.

A high-excursion 6” polypropylene woofer delivers effortless low bass extension, that exceeds most 8" competitive products, while the pivoting chambered 1” soft dome tweeter can be directed to ensure accurate coverage, when speaker positioning is compromised.

A full-fidelity transformer delivers uncompromised sonic performance in either high (70V, 100V) or low (8 Ohm) impedance.

Dimensional Sketches Specifications

PS-P63T Loudspeaker

Diameter: Bottom:	9.13” (232mm)
Diameter Top:	4.795” (122mm)
Depth:	15.6” (396mm)
With Grille Diameter:	9.13” (232mm)

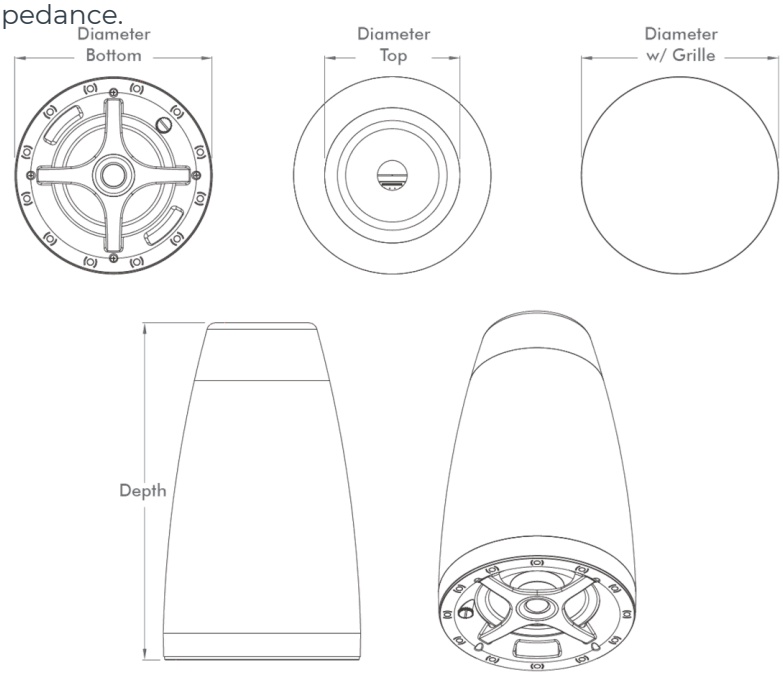

< Back to Index

Pendant Range

Professional Series 8" 120Watt Pendant Speaker

PS-P83T-BK-UNIT 8" Pendant Speaker (Pair)

Sonance Professional Series PS-P83T-BK-UNIT BLACK is a 70V/100V/8 Ohm selectable Pendant Speaker that utilizes a minimalistic design similar to pendant lighting to blend discreetly into the environment. It takes advantage of the same one-piece grille design as the In-Ceiling Speakers to deliver consistent sight lines when installed in the same space.

The integrated top cover hides the hanging hardware and wiring connector.

An ultra-high-excursion 8” polypropylene woofer delivers effortless and impactful low bass extension and augmentation, at any sound pressure level, making it the perfect partner for the PS-P43T and PS-P63T Pendant Speakers.

A full-fidelity transformer delivers uncompromised sonic performance in either high (70V, 100V) or low (8 Ohm) impedance.

Dimensional Sketches Specifications

PS-P83WT Loudspeaker

Diameter: Bottom:	11.06″ (281mm)
Diameter Top:	5.791″ (147mm)
Depth:	19.7″ (500mm)
With Grille Diameter:	11.06″ (281mm)

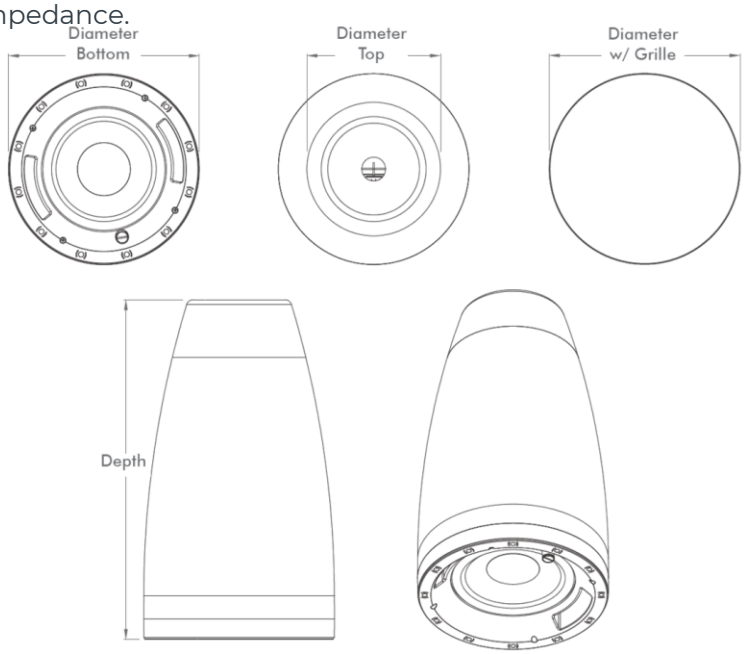

< Back to Index

Pendant Range

Professional Series 8" 120Watt Pendant Speaker

PS-P83T-WH 8" Pendant Speaker (Pair)

Sonance Professional Series PS-P83T-WH is a 70V/100V/8 Ohm selectable Pendant Speaker that utilizes a minimalistic design similar to pendant lighting to blend discreetly into the environment. It takes advantage of the same one-piece grille design as the In-Ceiling Speakers to deliver consistent sight lines when installed in the same space.

The integrated top cover hides the hanging hardware and wiring connector.

An ultra-high-excursion 8” polypropylene woofer delivers effortless and impactful low bass extension and augmentation, at any sound pressure level, making it the perfect partner for the PS-P43T and PS-P63T Pendant Speakers.

A full-fidelity transformer delivers uncompromised sonic performance in either high (70V, 100V) or low (8 Ohm) impedance.

Dimensional Sketches Specifications

PS-P83WT Loudspeaker

Diameter: Bottom:	11.06″ (281mm)
Diameter Top:	5.791″ (147mm)
Depth:	19.7″ (500mm)
With Grille Diameter:	11.06″ (281mm)

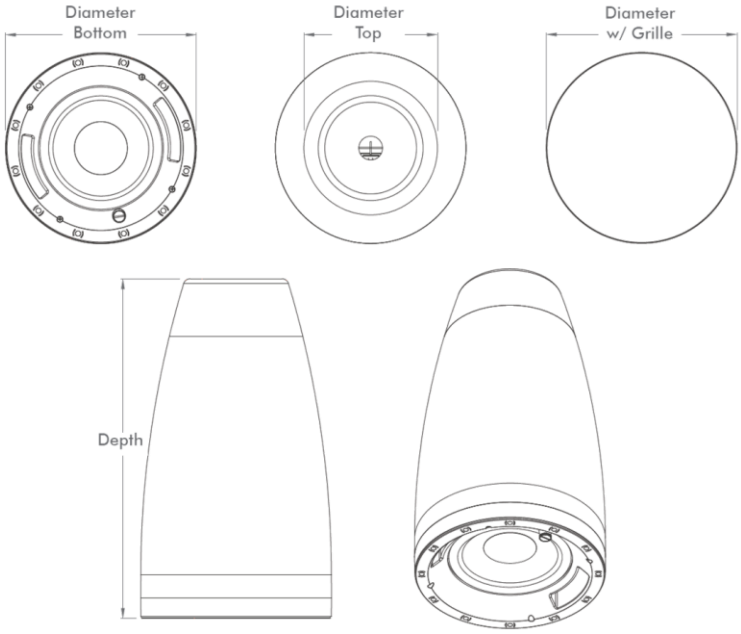

< Back to Index

Pendant Range

Professional Series 8" 200Watt Pendant SubWoofer Speaker

PS-P83WT-BK 8" Pendant Speaker (Unit)

Sonance Professional Series PS-P83WT-BK is a 70V/100V/8 Ohm selectable Pendant Speaker that utilizes a minimalistic design similar to pendant lighting to blend discreetly into the environment. It takes advantage of the same one-piece grille design as the In-Ceiling Speakers to deliver consistent sight lines when installed in the same space.

The integrated top cover hides the hanging hardware and wiring connector.

An ultra-high-excursion 8” polypropylene woofer delivers effortless and impactful low bass extension and augmentation, at any sound pressure level, making it the perfect partner for the PS-P43T and PS-P63T Pendant Speakers.

A full-fidelity transformer delivers uncompromised sonic performance in either high (70V, 100V) or low (8 Ohm) impedance.

Dimensional Sketches Specifications

PS-P83WT Loudspeaker

Diameter: Bottom:	11.06″ (281mm)
Diameter Top:	5.791″ (147mm)
Depth:	19.7″ (500mm)
With Grille Diameter:	11.06″ (281mm)

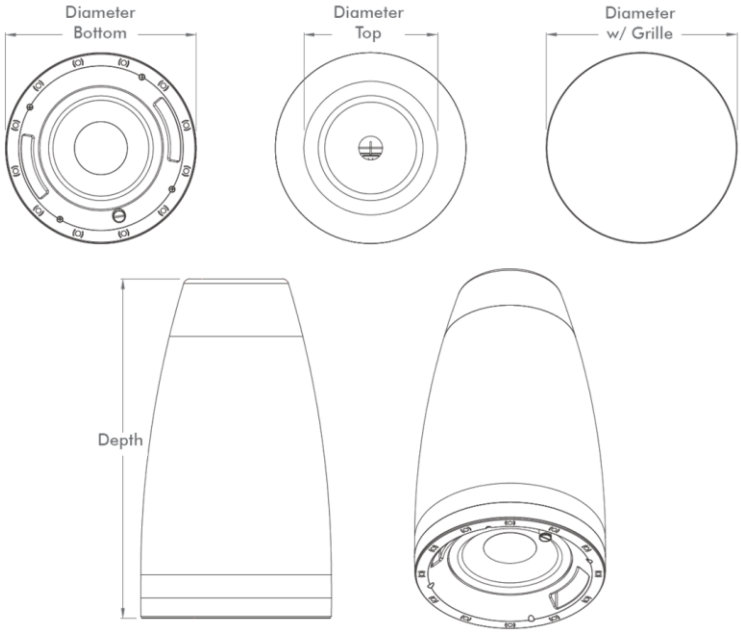

< Back to Index

Pendant Range

Professional Series 8" 200Watt Pendant SubWoofer Speaker

PS-P83WT-WH 8" Pendant Speaker (Unit)

Sonance Professional Series PS-P83WT-WH is a 70V/100V/8 Ohm selectable Pendant Speaker that utilizes a minimalistic design similar to pendant lighting to blend discreetly into the environment. It takes advantage of the same one-piece grille design as the In-Ceiling Speakers to deliver consistent sight lines when installed in the same space.

The integrated top cover hides the hanging hardware and wiring connector.

An ultra-high-excursion 8” polypropylene woofer delivers effortless and impactful low bass extension and augmentation, at any sound pressure level, making it the perfect partner for the PS-P43T and PS-P63T Pendant Speakers.

A full-fidelity transformer delivers uncompromised sonic performance in either high (70V, 100V) or low (8 Ohm) impedance.

Dimensional Sketches Specifications

PS-P83WT Loudspeaker

Diameter: Bottom:	11.06″ (281mm)
Diameter Top:	5.791″ (147mm)
Depth:	19.7″ (500mm)
With Grille Diameter:	11.06″ (281mm)

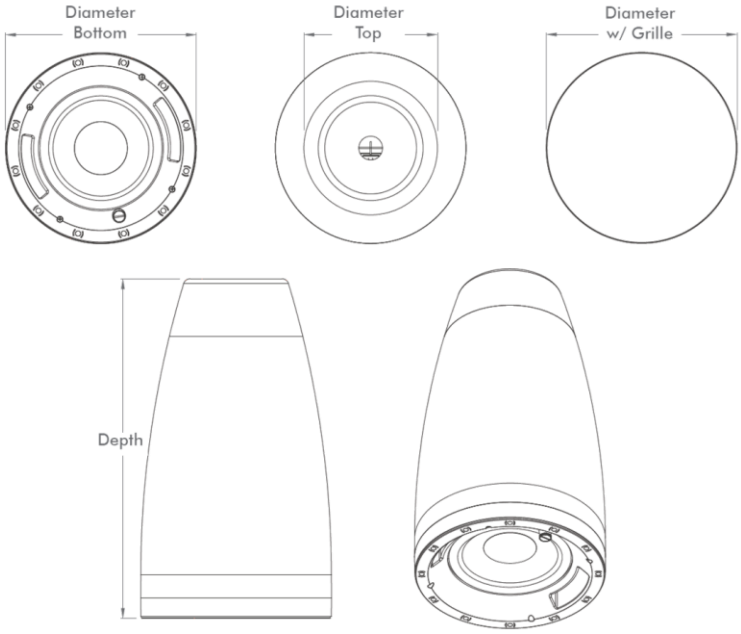

Surface Mount Speakers

< Back to Index

Performance

Sonance Professional Series has been engineered with a level of attention to detail not typically seen in the commercial audio industry.

The range features a full-fidelity transformer for uncompromised 70V/100V performance, heavy duty voice coils for reliability at high SPL, high excursion woofer for extended bass extension and chambered 1" tweeter for precise high-end detail and exceptional off-axis performance.

Aesthetics

Clean minimalistic lines and a flush-fitting grille make Sonance Professional Series Surface Mount Speakers look more like carefully designed pieces of decor, rather than the traditional bulky look of cabinet speakers.

Available in either black or white, which can be painted to match wall or ceiling colors.

Installation

Sonance Professional Series Surface-Mount

Speakers feature the patented FastMount bracket to speed up the installation process and prevent them from slipping out of adjustment over time.
The front-mounted cable connector and tap selector makes connection and adjustment a breeze, while the clip-in cover shields them from the elements.

The weather and temperature resistant construction and powder coated aluminum grille allow them to be used in either indoor or outdoor applications. UL 1480 certified, IPX4, Mil Spec 810, and UV IEC 529.

EASE Address software for Sonance Professional Series provides simple and accurate system layout of distributed audio systems, ensuring perfect coverage is always achieved.

< Back to Index

Surface Mount Range

Professional Series 4” 60Watt Surface-Mount

PS-S43T-WH 4" Surface Mount (Pair)

Sonance Professional Series PS-S43T-WT Surface-Mount Speaker features the Patented FastMount bracket and front cable connection to speed up the installation process and provide a clean appearance.

The IPX4 rated construction features a weatherproof high-impact, extreme temperature resistant cabinet and corrosion-proof powder coated aluminum grille, lending itself perfectly in both indoor and outdoor applications.

A high-excursion 4” polypropylene woofer delivers effortless low bass extension, that exceeds many larger competitive products, while the chambered 1” soft dome tweeter provides accurate high-end detail and exceptional coverage.

A full-fidelity transformer delivers uncompromised sonic performance in either high (70V, 100V) or low (8 Ohm) impedance.

< Back to Index

Surface Mount Range

Professional Series 4” 60Watt Surface-Mount

PS-S43T-BK 60W 4" Surface Mount (Pair)

Sonance Professional Series PS-S43TBLACK60WATT Surface-Mount Speaker features the Patented FastMount bracket and front cable connection to speed up the installation process and provide a clean appearance.

The IPX4 rated construction features a weatherproof high-impact, extreme temperature resistant cabinet and corrosion-proof powder coated aluminum grille, lending itself perfectly in both indoor and outdoor applications.

A high-excursion 4” polypropylene woofer delivers effortless low bass extension, that exceeds many larger competitive products, while the chambered 1” soft dome tweeter provides accurate high-end detail and exceptional coverage.

A full-fidelity transformer delivers uncompromised sonic performance in either high (70V, 100V) or low (8 Ohm) impedance.

Surface Mount Range

Professional Series 4” 60Watt Surface-Mount

Dimensional Sketches
Specifications

PS-S43T Loudspeaker

Height:	9.25″ (235mm)
Width:	5.47″ (139mm)
Depth:	4.8″ (122mm)

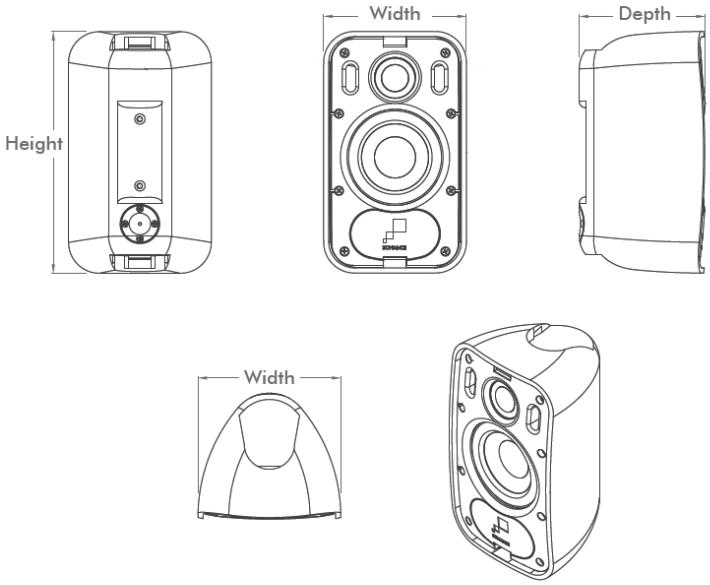

S4 Mounting Bracket

Height:	9.685″ (246mm)
Width:	4.527″ (115mm)
Depth Wall Mount:	5.158″ (131mm)
Depth Ceiling Mount:	5.866″ (149mm)

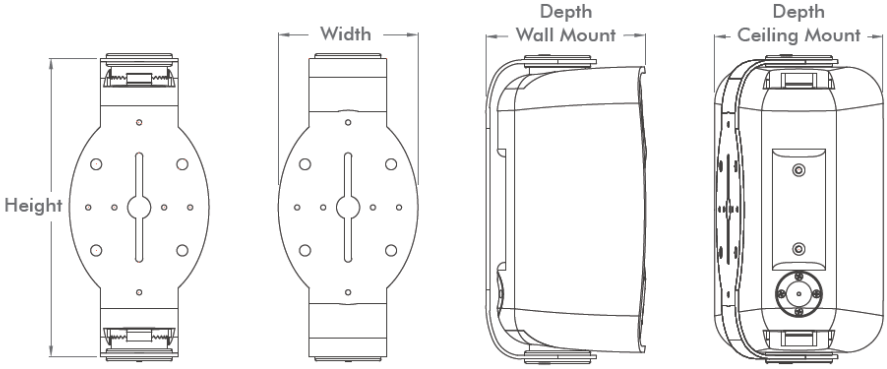

Surface Mount Range

Professional Series 5.25" 90Watt Surface Mount Speaker

PS-S53T-WH 5.25" Surface Mount (Pair)

Sonance Professional Series PS-S53T-WH Surface-Mount Speaker features the Patented FastMount® bracket and front cable connection to speed up the installation process and provide a clean appearance.

The IPX4 rated construction features a weatherproof high-impact, extreme temperature resistant cabinet and corrosion-proof powder coated aluminum grille, lending itself perfectly in both indoor and outdoor applications.

A high-excursion 5.25” polypropylene woofer delivers effortless low bass extension, that exceeds many larger competitive products, while the chambered 1” soft dome tweeter provides accurate high-end detail and exceptional coverage.

A full-fidelity transformer delivers uncompromised sonic performance in either high (70V, 100V) or low (8 Ohm) impedance.

Surface Mount Range

Professional Series 5.25" 90Watt Surface Mount Speaker

PS-S53T-BK 5.25" Surface Mount (Pair)

Sonance Professional Series PS-S53T-BK Surface-Mount Speaker features the Patented FastMount® bracket and front cable connection to speed up the installation process and provide a clean appearance.

The IPX4 rated construction features a weatherproof high-impact, extreme temperature resistant cabinet and corrosion-proof powder coated aluminum grille, lending itself perfectly in both indoor and outdoor applications.

A high-excursion 5.25” polypropylene woofer delivers effortless low bass extension, that exceeds many larger competitive products, while the chambered 1” soft dome tweeter provides accurate high-end detail and exceptional coverage.

A full-fidelity transformer delivers uncompromised sonic performance in either high (70V, 100V) or low (8 Ohm) impedance.

Surface Mount Range

Professional Series 5.25" 90Watt Surface Mount Speaker

Dimensional Sketches
Specifications

PS-S53T Loudspeaker

Height:	10.08″ (256mm)
Width:	6.36″ (162mm)
Depth:	5.68″ (144mm)

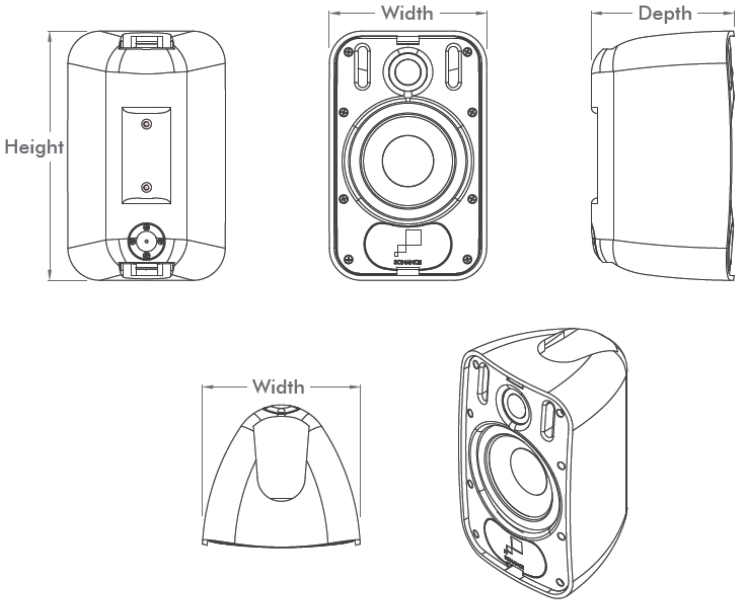

S5 Mounting Bracket

Height:	10.669″ (271mm)
Width:	4.527″ (115mm)
Depth Wall Mount:	6.181″ (157mm)
Depth Ceiling Mount:	6.575″ (167mm)

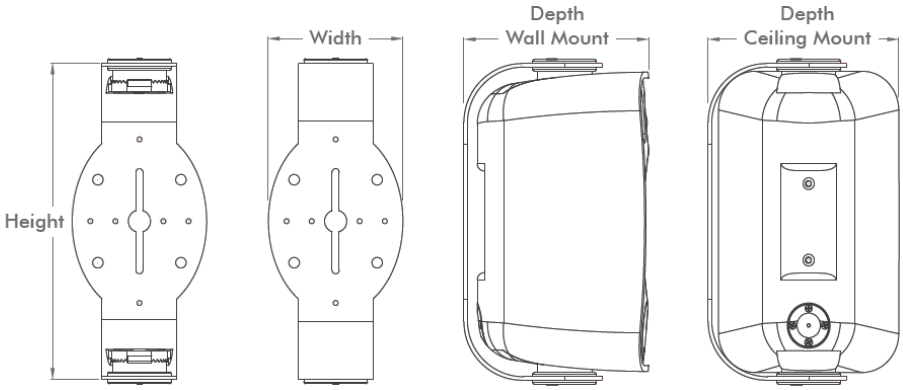

Surface Mount Range

Professional Series 6.5" 120Watt Surface Mount Speaker

PS-S63T-WH 6.5" Surface Mount (Pair)

Sonance Professional Series PS-S63T-WH Surface-Mount Speaker features the Patented FastMount® bracket and front cable connection to speed up the installation process and provide a clean appearance.

The IPX4 rated construction features a weatherproof high-impact, extreme temperature resistant cabinet and corrosion-proof powder coated aluminum grille, lending itself perfectly in both indoor and outdoor applications.

A high-excursion 6.5” polypropylene woofer delivers effortless low bass extension, that exceeds many larger competitive products, while the chambered 1” soft dome tweeter provides accurate high-end detail and exceptional coverage.

A full-fidelity transformer delivers uncompromised sonic performance in either high (70V, 100V) or low (8 Ohm) impedance.

< Back to Index

Surface Mount Range

Professional Series 6.5" 120Watt Surface Mount Speaker

PS-S63T-BK 6.5" Surface Mount (Pair)

Sonance Professional Series PS-S63T-BK Surface-Mount Speaker features the Patented FastMount® bracket and front cable connection to speed up the installation process and provide a clean appearance.

The IPX4 rated construction features a weatherproof high-impact, extreme temperature resistant cabinet and corrosion-proof powder coated aluminum grille, lending itself perfectly in both indoor and outdoor applications.

A high-excursion 6.5” polypropylene woofer delivers effortless low bass extension, that exceeds many larger competitive products, while the chambered 1” soft dome tweeter provides accurate high-end detail and exceptional coverage.

A full-fidelity transformer delivers uncompromised sonic performance in either high (70V, 100V) or low (8 Ohm) impedance.

Surface Mount Range

Professional Series 6.5" 120Watt Surface Mount Speaker

Dimensional Sketches
Specifications

PS-S63T Loudspeaker

Height:	12.14″ (308mm)
Width:	7.51″ (191mm)
Depth:	6.86″ (174mm)

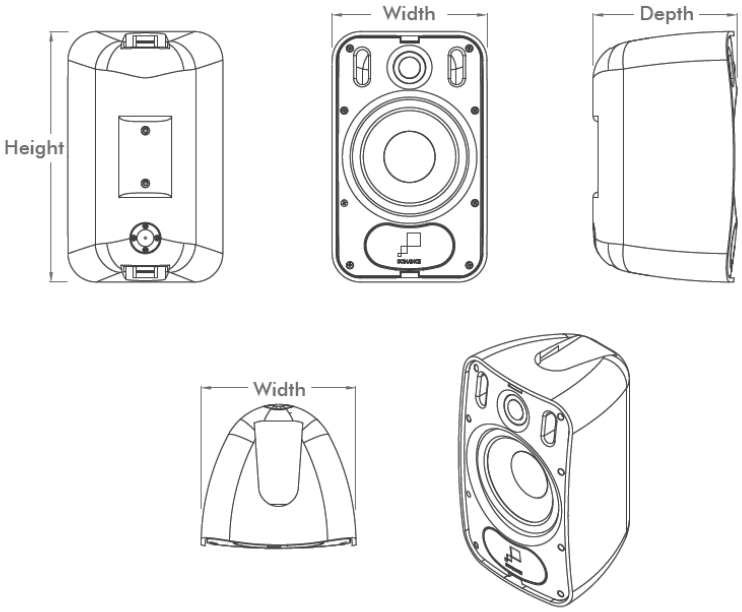

S6 Mounting Bracket

Height:	12.657″ (322mm)
Width:	4.527″ (115mm)
Depth Wall Mount:	7.48″ (190mm)
Depth Ceiling Mount:	8.268″ (210mm)

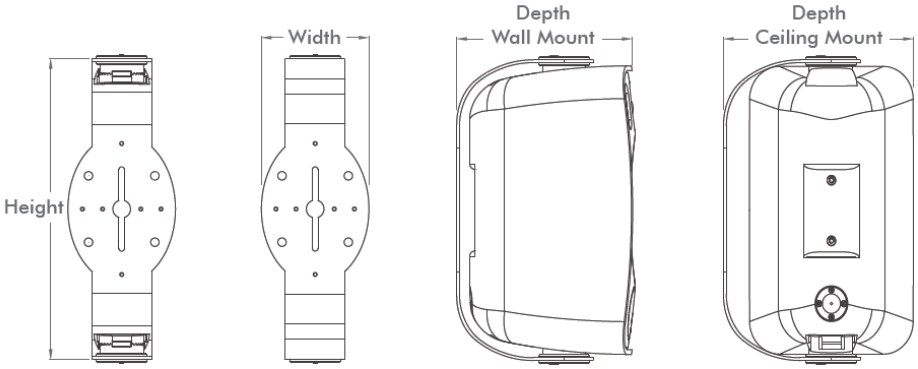

Surface Mount Range

Professional Series 8“ 160Watt Surface Mount Speaker

PS-S83T-WH 8" Surface Mount (Pair)

Sonance Professional Series PS-S83T-WH Surface-Mount Speaker features the Patented FastMount® bracket and front cable connection to speed up the installation process and provide a clean appearance.

The IPX4 rated construction features a weatherproof high-impact, extreme temperature resistant cabinet and corrosion-proof powder coated aluminum grille, lending itself perfectly in both indoor and outdoor applications.

A high-excursion 8” polypropylene woofer delivers effortless low bass extension, that is equal or better to systems using dedicated subwoofers, while the chambered 1” soft dome tweeter provides accurate high-end detail and exceptional coverage.

A full-fidelity transformer delivers uncompromised sonic performance in either high (70V, 100V) or low (8 Ohm) impedance.

Surface Mount Range

Professional Series 8“ 160Watt Surface Mount Speaker

PS-S83T-BK 8" Surface Mount (Pair)

Sonance Professional Series PS-S83T-BK Surface-Mount Speaker features the Patented FastMount® bracket and front cable connection to speed up the installation process and provide a clean appearance.

The IPX4 rated construction features a weatherproof high-impact, extreme temperature resistant cabinet and corrosion-proof powder coated aluminum grille, lending itself perfectly in both indoor and outdoor applications.

A high-excursion 8” polypropylene woofer delivers effortless low bass extension, that is equal or better to systems using dedicated subwoofers, while the chambered 1” soft dome tweeter provides accurate high-end detail and exceptional coverage.

A full-fidelity transformer delivers uncompromised sonic performance in either high (70V, 100V) or low (8 Ohm) impedance.

Surface Mount Range

Professional Series 8“ 160Watt Surface Mount Speaker

Dimensional Sketches
Specifications

PS-S83T Loudspeaker

Height:	14.02″ (356mm)
Width:	9.01″ (229mm)
Depth:	8.58″ (218mm)

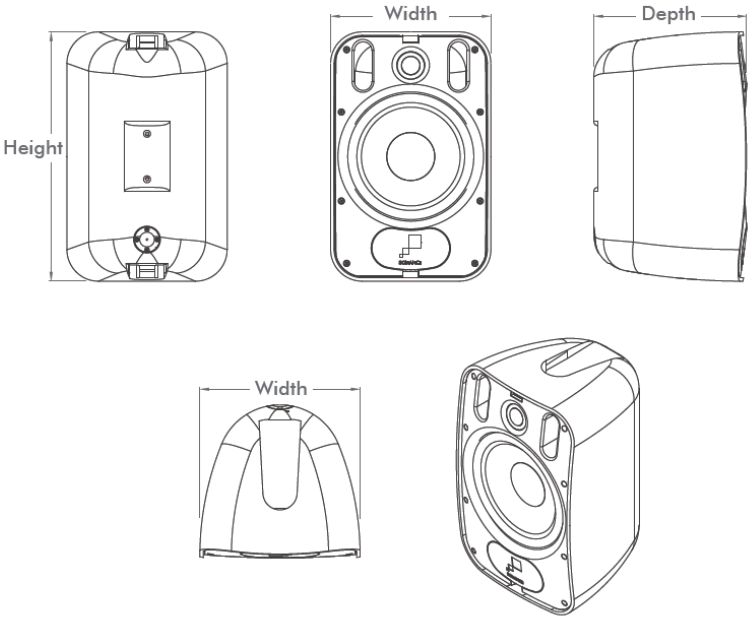

S8 Mounting Bracket

Height:	14.528″ (369mm)
Width:	4.527″ (115mm)
Depth Wall Mount:	9.37″ (238mm)
Depth Ceiling Mount:	10.315″ (262mm)

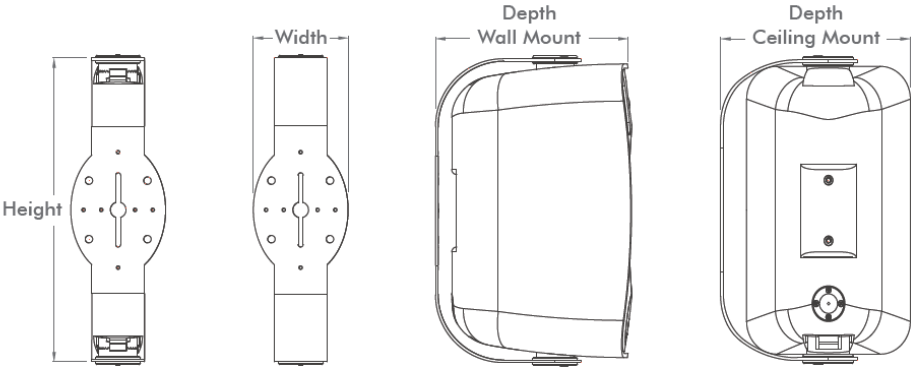

< Back to Index

Surface Mount Range

Professional Series 8" 200Watt Surface Mount Woofer

PS-S83WT-BK
(Unit)

PS-S83WT 8" Surface Mount Woofer

Sonance Professional Series PS-S83WT Surface-Mount Woofer features the Patented FastMount® bracket and front cable connection to speed up the installation process and provide a clean appearance.

The IPX4 rated construction features a weatherproof high-impact, extreme temperature resistant cabinet and corrosion-proof powder coated aluminum grille, lending itself perfectly in both indoor and outdoor applications.

An ultra-high-excursion 8” polypropylene woofer delivers effortless and impactful low bass extension and augmentation, at any sound pressure level, making it the perfect partner for the PS-S43T, PS-S53T and PS-S63T Speakers.

A full-fidelity transformer delivers uncompromised sonic performance in either high (70V, 100V) or low (8 Ohm) impedance.

PS-S83WT-WT
(Unit)

Surface Mount Range

Professional Series 8" 200Watt Surface Mount Woofer

Dimensional Sketches
Specifications

PS-S83WT Loudspeaker

Height:	14.02" (356mm)
Width:	9.01" (229mm)
Depth:	8.58" (218mm)

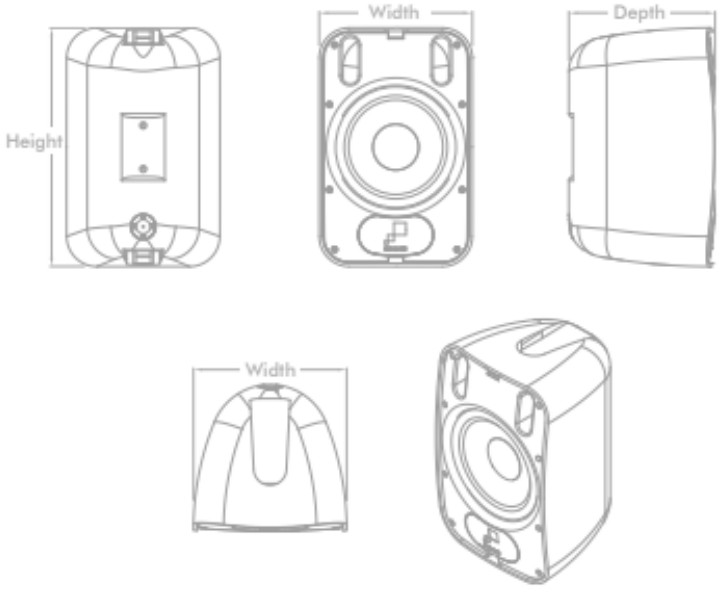

S8 Mounting Bracket

Height:	14.528" (369mm)
Width:	4.527" (115mm)
Depth Wall Mount:	9.37" (238mm)
Depth Ceiling Mount:	10.315" (262mm)

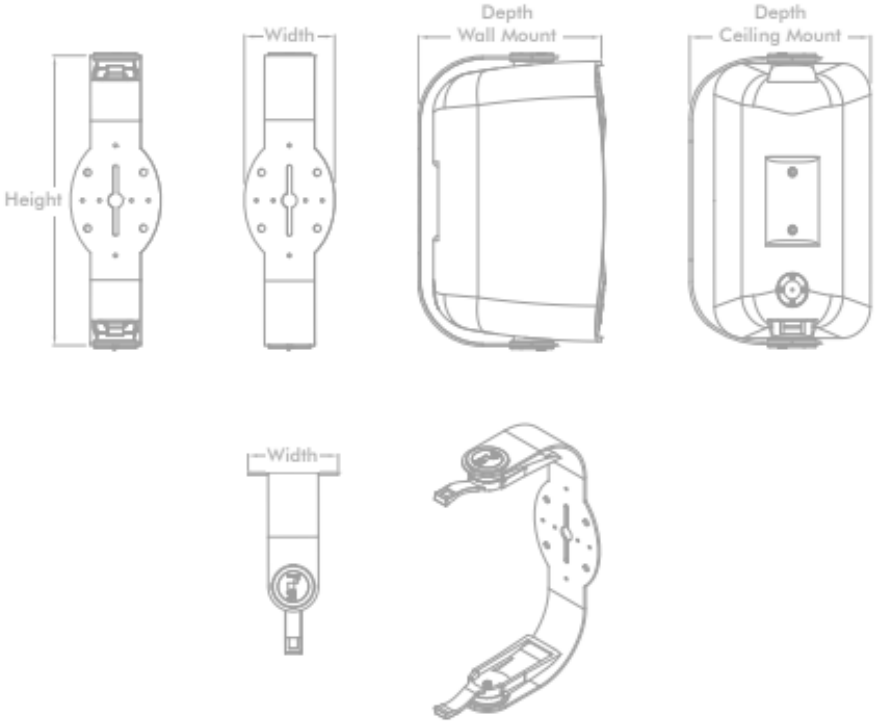

< Back to Index

Surface Mount Range

4.5” Surface-Mount Speaker

PS-S43T-MKII-WH (Unit)

The Sonance PS-S43T MKII is a professional two-way surface-mount loudspeaker with a 4.5" woofer and 1" tweeter for clean, accurate sound. Its IP45-rated weatherized enclosure, FastMount® bracket, and front cable connection ensure easy installation and a minimalistic appearance.

With UL1480A and UL2239 certifications, this speaker delivers durable, safe performance. It handles 60 watts program and 30 watts pink noise, with a maximum SPL of 110dB peak, making it ideal for commercial or residential audio applications.

< Back to Index

Surface Mount Range

4.5” Surface-Mount Speaker

DIMENSIONAL SKETCHES SPECIFICATIONS

PS-S43T MKII Loudspeaker
Height: 9.25” (235mm)
Width: 5.47” (139mm)
Depth: 4.8” (122mm)

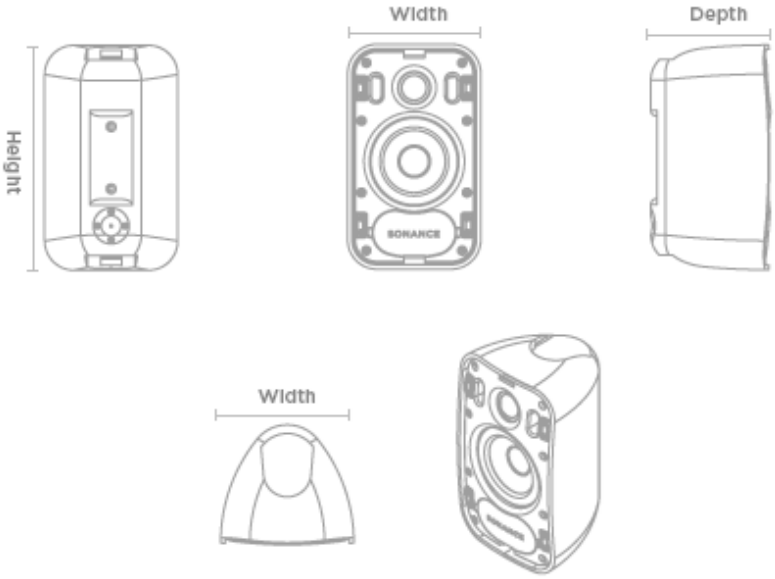

S4 Mounting Bracket
Height: 9.685” (246mm)
Width: 4.527” (115mm)
Depth Wall Mount:
5.158” (131mm)
Depth Ceiling Mount:
5.866” (149mm)

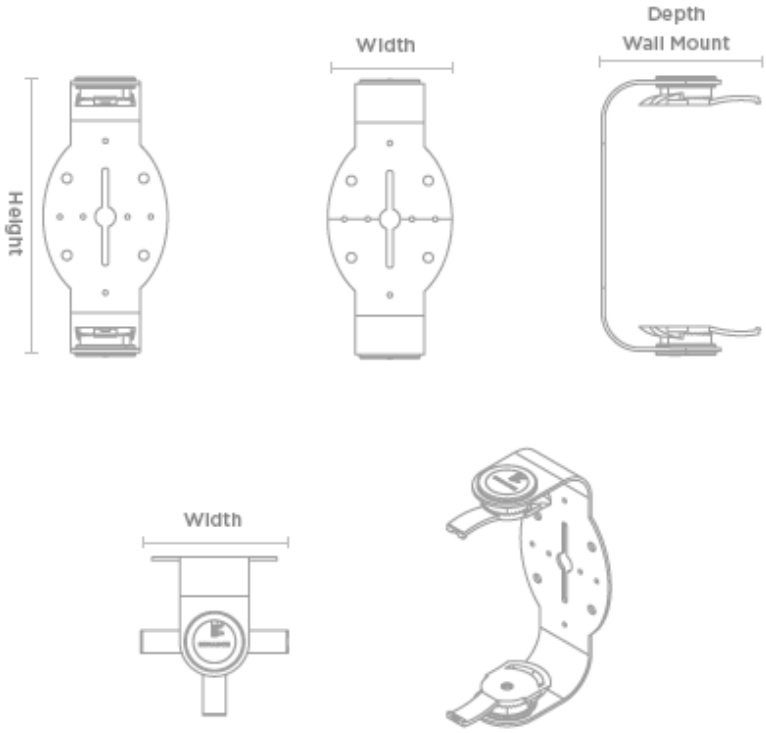

Surface Mount Range

5.25” Surface-Mount Speaker

PS-S53T-MKII-WH (Unit)

The Sonance PS-S53T-MKII-WH is a professional two-way surface-mount loudspeaker with a 5.25" woofer and 1" tweeter for clean, accurate sound. Its IP45-rated weatherized enclosure, FastMount® bracket, and front cable connection ensure easy installation and a minimalistic appearance.

With UL1480A and UL2239 certifications, this speaker delivers durable, safe performance. It handles 90 watts program and 45 watts pink noise, with a maximum SPL of 113dB peak, making it ideal for commercial or residential audio applications.

< Back to Index

Surface Mount Range

5.25" Surface-Mount Speaker

DIMENSIONAL SKETCHES SPECIFICATIONS

PS-S53T MKII Loudspeaker
Height: 10.08" (256mm)
Width: 6.36" (162mm)
Depth: 5.68" (144mm)

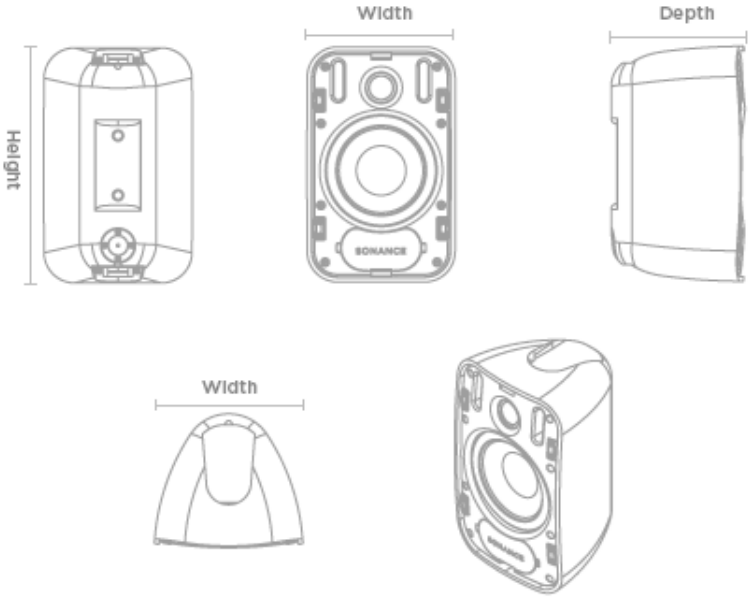

S5 Mounting Bracket
Height: 10.669" (271mm)
Width: 4.527" (115mm)
Depth Wall Mount:
6.181" (157mm)
Depth Ceiling Mount:
6.575" (167mm)

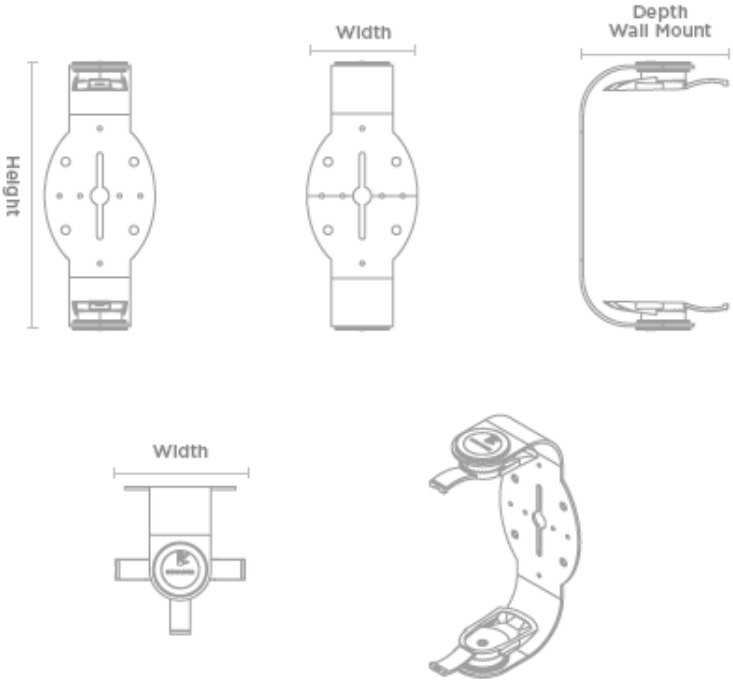

< Back to Index

Surface Mount Range

6.5” Surface-Mount Speaker

PS-S63T-MKII-BK (Unit)

PS-S63T-MKII-WH (Unit)

PS-S63T-MKII

The Sonance PS-S63T-MKII is a professional two-way surface-mount loudspeaker with a 6.5" woofer and 1" tweeter for clean, accurate sound. Its IP45-rated weatherized enclosure, FastMount® bracket, and front cable connection ensure easy installation and a minimalistic appearance.

With UL1480A and UL2239 certifications, this speaker delivers durable, safe performance. It handles 120 watts program and 60 watts pink noise, with a maximum SPL of 116dB peak, making it ideal for commercial or residential audio applications.

< Back to Index

Surface Mount Range

6.5” Surface-Mount Speaker

DIMENSIONAL SKETCHES SPECIFICATIONS

PS-S63T MKII Loudspeaker
Height: 12.14” (308mm)
Width: 7.51” (191mm)
Depth: 6.86” (174mm)

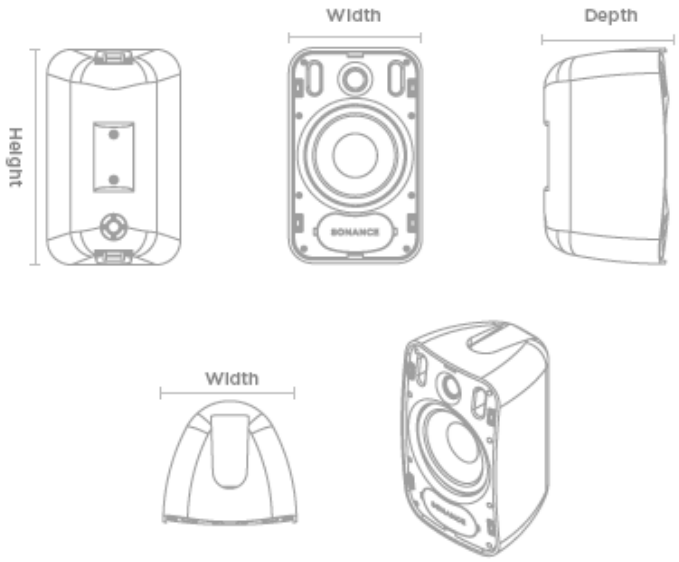

S6 Mounting Bracket
Height: 12.657” (322mm)
Width: 4.527” (115mm)
Depth Wall Mount:
7.48” (190mm)
Depth Ceiling Mount:
8.268” (210mm)

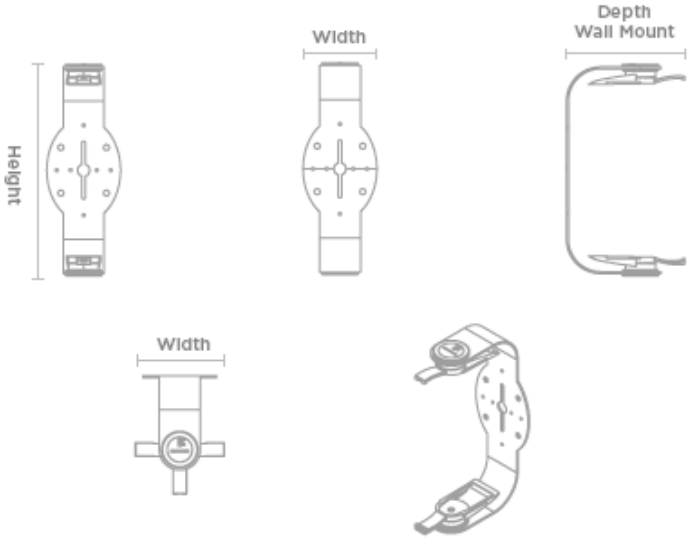

< Back to Index

Surface Mount Range

8” Surface-Mount Speaker

PS-S83T-MKII-BK (Unit)

PS-S83T-MKII-WH (Unit)

PS-S83T-MKII

The Sonance PS-S83T MKII is a professional two-way surface-mount loudspeaker with an 8" woofer and 1" tweeter for clean, accurate sound. Its IP45-rated weatherized enclosure, FastMount® bracket, and front cable connection ensure easy installation and a minimalistic appearance.

With UL1480A and UL2239 certifications, this speaker delivers durable, safe performance. It handles 160 watts program and 80 watts pink noise, with a maximum SPL of 116dB peak, making it ideal for commercial or residential audio applications.

< Back to Index

Surface Mount Range

8” Surface-Mount Speaker

DIMENSIONAL SKETCHES SPECIFICATIONS

PS-S83T MKII Loudspeaker
Height: 14.02” (356mm)
Width: 9.01” (229mm)
Depth: 8.58” (218mm)

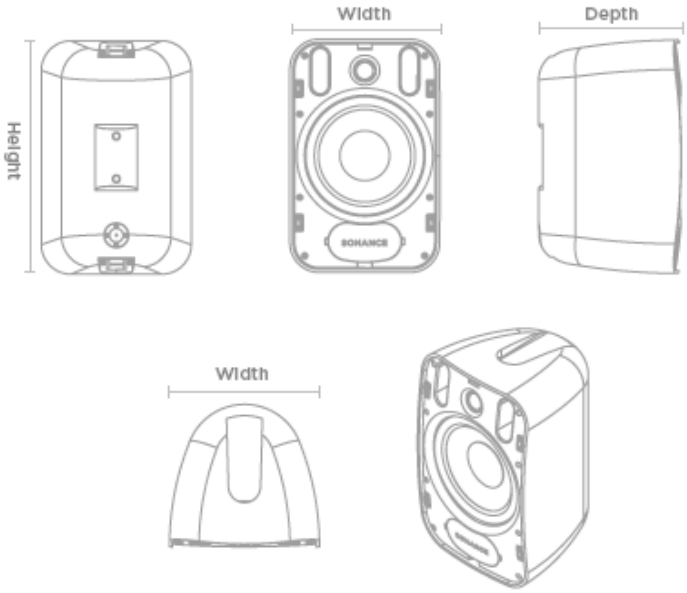

S8 Mounting Bracket
Height: 14.528” (369mm)
Width: 4.527” (115mm)
Depth Wall Mount:
9.37” (238mm)
Depth Ceiling Mount:
10.315” (262mm)

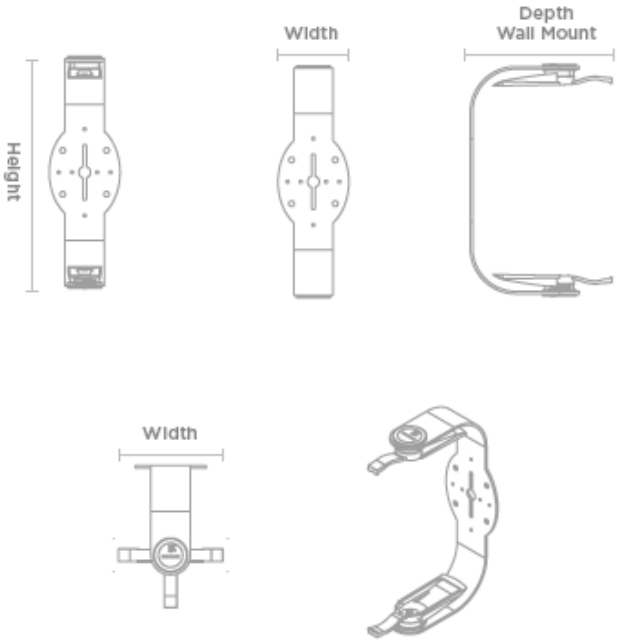

Surface Mount Range

8” Surface-Mount Woofer

PS-S83WT-MKII-BK (Unit)

The Sonance PS-S83WT-MKII-BK is a professional surface-mount woofer with an 8" ultra-high-excursion driver for powerful, precise bass. Its IP45-rated weatherized enclosure, FastMount® bracket, and front cable connection ensure easy installation and a minimalistic appearance.

With UL1480A and UL2239 certifications, this woofer delivers durable, safe performance. It handles 200 watts program and 125 watts pink noise, with a maximum SPL of 116dB peak, making it ideal for commercial or residential low-frequency reinforcement.

Surface Mount Range

8” Surface-Mount Speaker

Dimensional Sketches
Specifications

PS-S83WT Loudspeaker

Height:	14.02″ (356mm)
Width:	9.01″ (229mm)
Depth:	8.58″ (218mm)

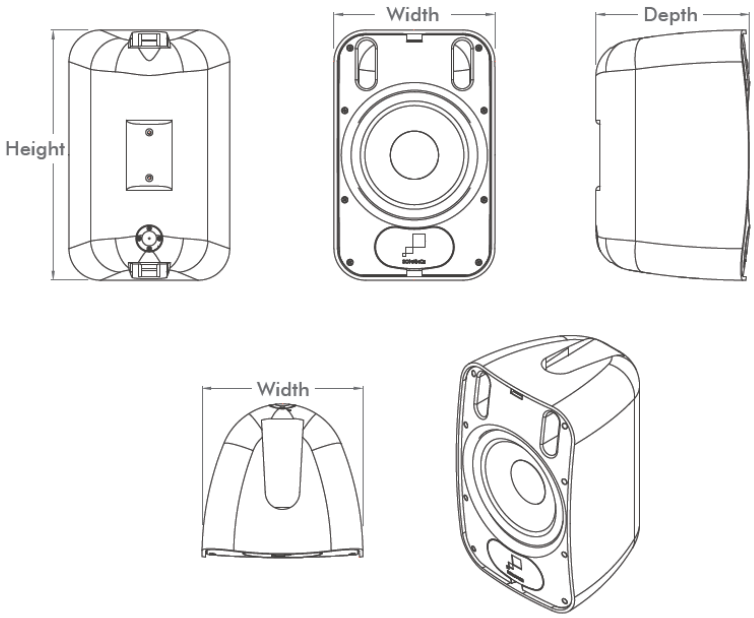

S8 Mounting Bracket

Height:	14.528″ (369mm)
Width:	4.527″ (115mm)
Depth Wall Mount:	9.37″ (238mm)
Depth Ceiling Mount:	10.315″ (262mm)

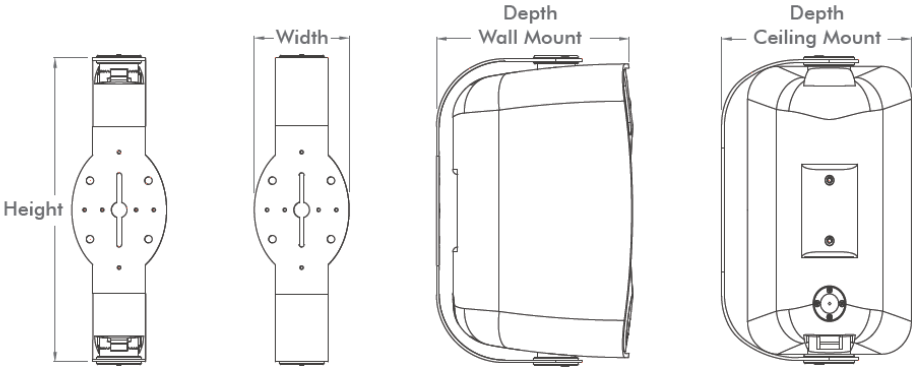

< Back to Index

Surface Mount Range

Professional Series Dual 10" Bandpass Subwoofer

NEW! Dual 10" Bandpass Subwoofer

The PS-S210SUBT utilizes all-new 2 x 10” (254mm) low profile, high excursion drivers, that were specifically engineered in-house by Sonance for this product. The polyurethane-coated, laminated-plywood enclosure features an extremely shallow design which allows it to be used in a wide range of specialty applications such as under restaurant booths or banquettes (using the included feet), or mounted onto the side of rafters, on walls or under ceilings (with the optional C-bracket).

One of the most unique and versatile features of the PS-S210SUBT is the ability to port either from the front or the side of the enclosure. The installer simply unscrews the port from the front of the cabinet, and then unscrews a blanking plate from the side, and swaps them. This will allow the product to be used in a variety of installation locations, while always ensuring the optimum sonic performance is achieved.

The PS-S210SUBT features Sonance’s Laminated Core Technology transformer (SLCT), delivering full-fidelity performance in either 70V or 100V mode. This, combined with the built-in low pass filter, allows the subwoofer to be driven on the same feed as the other full-range loudspeakers in a system, negating the need for additional amplifier channels and DSP.

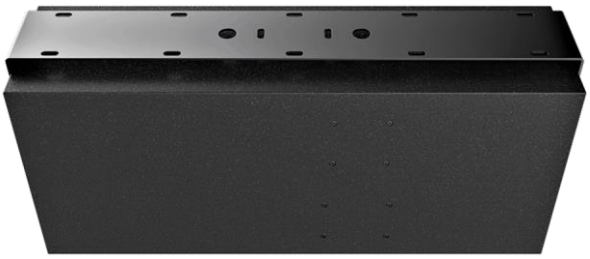

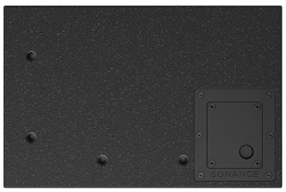

< Back to Index

Dimensional Sketches Specifications

PS-S210SUBT Subwoofer

Height: 9″ (228mm)
Width: 33″ (838mm)
Depth: 13.78″ (350mm)

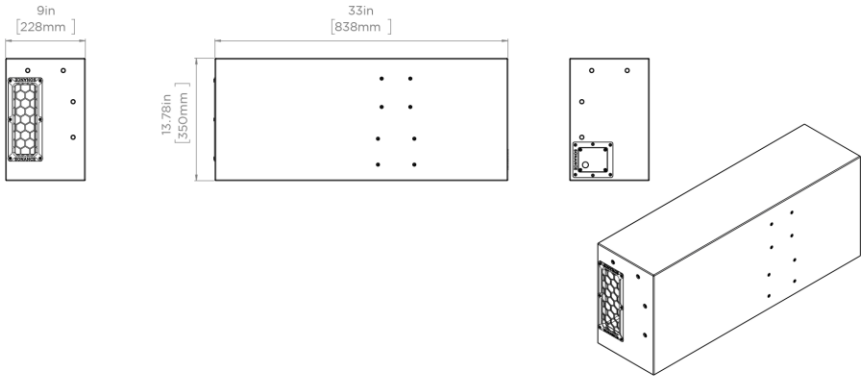

PS-S210SUBT Subwoofer with bracket position one

Height: 9″ (228mm)
Width: 33.84″ (860mm)
Depth: 14.70″ (373mm)

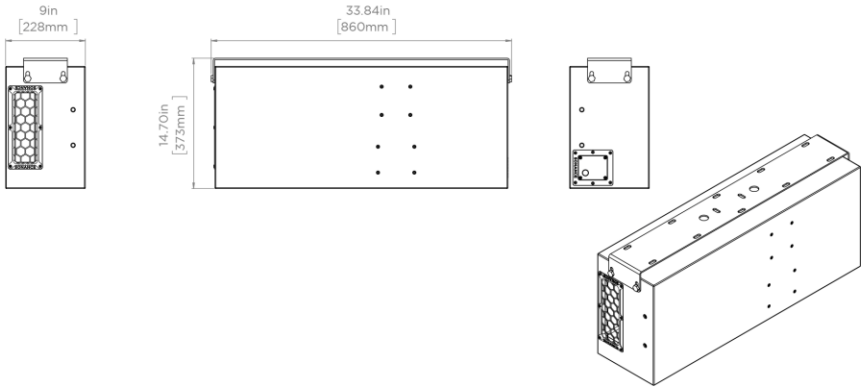

PS-S210SUBT Subwoofer with bracket position two

Height: 9.89″ (251mm)
Width: 33.84″ (860mm)
Depth: 13.78″ (350mm)

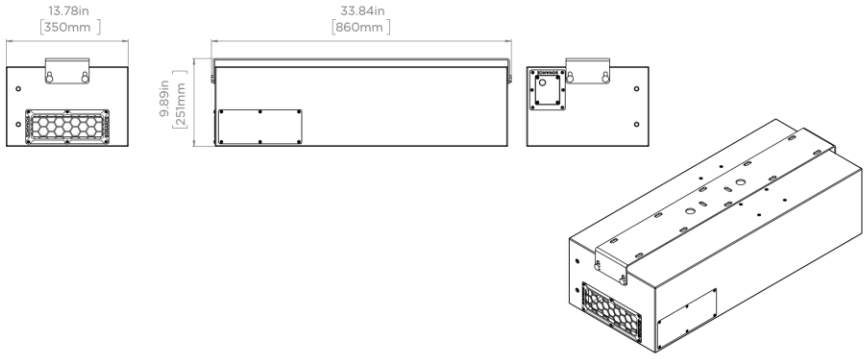

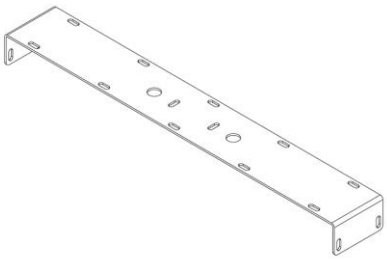

PS-S210SUBT C-Bracket

This optional metal C-Bracket is designed to mount the PS-S210SUB Dual 10" Subwoofer onto surfaces such as rafters or walls.

Supplied with 4 x M10 bolts and washers.

< Back to Index

Sonance Landscape Series

From the pioneers of performance landscape audio, Sonance offers top performance in Sonance Landscape Series speakers and subwoofers.

Designed and engineered for ultimate performance in any outdoor space, SLS paves the way for premium audio in outdoor environments.

Enhanced Performance

The family includes two satellite speaker models, two in-ground subwoofers, and one hardscape subwoofer. Each model features enhancements over previous generations like the addition of the Sonance Laminated Core Transformer with an adjustable tap and new larger drivers and woofers making each component of the series powerful and flexible for system design and application.

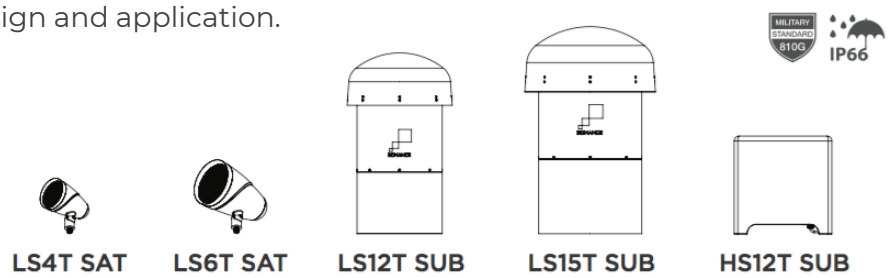

Landscape Speakers

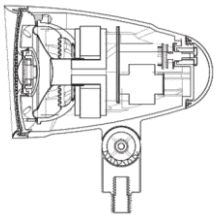

The SLS satellite speakers utilize 4 ½” and 6 ½” driver technology as proven successful in the Sonance Visual Performance Extreme products. This design features an impressive size and performance increase over the previous satellite models. Additional enhancements to the landscape satellites include a new mounting knuckle design and a transformer tap that allows each speaker to be tuned for 70V/100V or 8 Ohm applications.

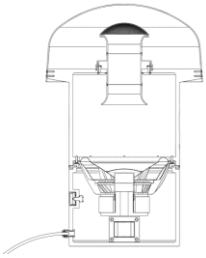

Smooth and Powerful Bass

SLS in-ground subwoofers are available in 12” or 15”. They are also outfitted with the Sonance Laminated Core Transformer so the whole system can be customized for the needs of the space.

The Landscape Look

SLS is designed to surround the listening area with numerous speakers and subwoofers that fit into the landscape among the elements of the great outdoors. The system blends seamlessly into the surroundings and visibly match the shape and design of most landscape lighting.

< Back to Index

Camouflaged Design

Sonance Landscape Series satellite speakers are constructed from a dark brown composite that won't corrode or flake over time and is easily camouflaged amongst plants and foliage. The all-weather design ensures years of reliable service, while the color-molded construction resists chipping and scratches, even if accidentally hit with garden tools.

Grille Design for Performance

LS4T SAT and LS6T SAT have a replaceable wide dispersion grille. The design ensures optimal acoustic performance and the ability to easily replace the grille if necessary.

Fully Scalable, Totally Expandable

Sonance Landscape Series is totally scalable to suit any size space and can be expanded at any time afterwards as needed. The 70 volt/100 volt system utilizes a daisy-chain configuration, making installation as simple as running the appropriate 4-core cable around the perimeter of the space and connecting the satellite speakers and subwoofers in an alternating left / right configuration.

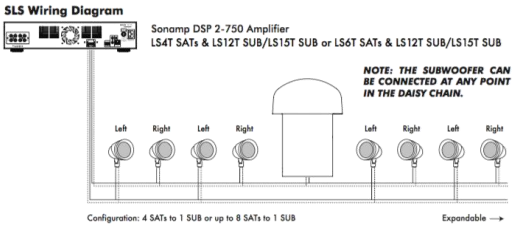

Quality Built for the Elements

Sonance Landscape Series was designed to operate under the most extreme weather conditions, from -20˚ to 190˚ F (-29˚ to 88˚ C). Triple-sealed enclosures, waterproof connectors and marine grade components ensures SLS will stand up to the harshest elements Mother Nature dishes up, including surf, sun, sand and snow. It is this quality and durability that will guarantee years of reliable entertainment.

Flexible Mounting Options

Sonance Landscape Series satellite speakers feature versatile mounting hardware options, allowing them to be positioned strategically to create the optimal sound for any space. Ground stakes are perfect for garden beds, while the surface mounts make mounting onto tree limbs or in pergolas a breeze.

< Back to Index

Satellite Speakers Range

SLS satellite speakers feature enhancements like the Sonance Laminated Core Transformer with an adjustable tap and large drivers and woofers making each component of the series powerful and flexible for system design and application.

LS4T-SAT

Aesthetics

• Designed to blend in with landscape surroundings
• Color-molded composite construction won't chip, peel or fade over time
Performance
• Part of a scalable system that delivers perfectly even coverage and unequalled sonic performance throughout any space
• 4 1/2" woofer
• Sonance Laminated Core Transformer (SLCT) with an adjustable Tap for 40W, 20W, 10W, (5W 70V), and 8 Ohm installations Installation
• 1/2" NPS male mounting threads enable flexible mounting options
• Enhanced mounting knuckle design Environmental
• Color-molded composite construction won't chip, peel or fade over time
• UV-resistant composite enclosure
• High heat ABS, non-corrosive sealed enclosure to handle extreme conditions
• Rust-proof grille; removeable for easy replacement
• IP66 and MIL STD 810 rated

Tweeter	1" (25mm) Polyurethane dome
Woofer	4 1/2" (114mm) Injection molded polypropylene cone with a Santoprene TM rubber surround
Frequency Response	75Hz – 20kHz ±3dB
Sensitivity	88dB @ 1m, 2.83 V (8-ohms)
Recommended Amplifier Power (8 Ohms)	5W min, 90W max
Transformer Taps	70V: 40W, 20W, 10W, 5W; 100V: 40W, 20W, 10W; 8 ohms
Enclosure Material	High Heat ABS, non-corrosive sealed enclosure
Dimensions (L x Dia.)	8.07" x 5.12" (205mm x 130mm)
Shipping Weight	6.28 lbs (2.85 kg) each

< Back to Index

Satellite Speakers Range

SLS satellite speakers feature enhancements like the Sonance Laminated Core Transformer with an adjustable tap and large drivers and woofers making each component of the series powerful and flexible for system design and application.

LS6T-SAT

Aesthetics

• Designed to blend in with landscape surroundings
• Color-molded composite construction won't chip, peel or fade over time Performance
• Part of a scalable system that delivers perfectly even coverage and unequalled sonic performance throughout any space
• 4 1/2" woofer
• Sonance Laminated Core Transformer (SLCT) with an adjustable Tap for 40W, 20W, 10W, (5W 70V), and 8 Ohm installations Installation
• 1/2" NPS male mounting threads enable flexible mounting options
• Enhanced mounting knuckle design Environmental
• Color-molded composite construction won't chip, peel or fade over time
• UV-resistant composite enclosure
• High heat ABS, non-corrosive sealed enclosure to handle extreme conditions
• Rust-proof grille; removeable for easy replacement
• IP66 and MIL STD 810 rated

Tweeter	1" (25mm) Polyurethane dome
Woofer	6 1/2" (165mm) Injection molded polypropylene cone
with a	SantopreneTM rubber surround
Frequency Response	55Hz – 20kHz ±3dB
Sensitivity	90dB @ 1m, 2.83 V (8-ohms)
Recommended Amplifier Power (8 Ohms)	5W min, 125W max
Transformer Taps	70V: 60W, 30W, 15W, 7.5W; 100V: 60W, 30W, 15W; 8 Ohms
Enclosure Material	High Heat ABS, non-corrosive sealed enclosure
Dimensions (L x Dia.)	11.70" x 7.43" (297mm x 189mm)
Shipping Weight	9.92 lbs (4.5kgs) each

< Back to Index

In-Ground Subwoofer Range

SLS satellite speakers feature enhancements like the Sonance Laminated Core Transformer with an adjustable tap and large drivers and woofers making each component of the series powerful and flexible for system design and application.

Aesthetics

• Designed to blend in with landscape surroundings
• Color-molded composite construction won't chip, peel or fade over time Performance
• Part of a scalable system that delivers perfectly even coverage and unequalled sonic performance throughout any space
• Polypropylene cone woofer with a Santoprene rubber surround for high excursion Sonance Laminated Core Transformer with an adjustable Tap for 300W, 150W, 75W, (38W 70V), and 8 ohm installations
• Laminar Flow Port reduces distortion and improves frequency response Installation
• Vertically buried for easy installation Environmental • UV-resistant, low density polyethylene enclosure
• Robust construction to handle extreme conditions
• IP66 and MIL STD 810 rated

LS12T-SUB

Woofer	15" (381mm) polypropylene cone with a Santoprene TM rubber surround
Frequency Response	20Hz – 100Hz ±3dB
Sensitivity	94dB @ 1m, 2.83 V (8-ohms)
Recommended Amplifier Power (8 Ohms)	50W min, 500W max
Transformer Taps	70V: 300W, 150W, 75W; 100V: 300W, 150W; 8 Ohms
Crossover Frequency	100Hz
Enclosure Material	Low density polyethylene (LDPE)
Finish	Dark brown textured canopy
Overall Dimensions	21.26" x 33.58" (540mm x 853mm)
Woofer Enclosure Dims (H x Dia.)	23.01" x 16.73" (584mm x 425mm)
Canopy Dims (H x Dia.)	10.57" x 21.26" (268mm x 540mm)
Shipping Weight	83.77 lbs (38.0kg)

< Back to Index

In-Ground Subwoofer Range

SLS satellite speakers feature enhancements like the Sonance Laminated Core Transformer with an adjustable tap and large drivers and woofers making each component of the series powerful and flexible for system design and application.

Aesthetics

• Designed to blend in with landscape surroundings
• Color-molded composite construction won't chip, peel or fade over time Performance
• Part of a scalable system that delivers perfectly even coverage and unequalled sonic performance throughout any space
• Polypropylene cone woofer with a Santoprene rubber surround for high excursion Sonance Laminated Core Transformer with an adjustable Tap for 300W, 150W, 75W, (38W 70V), and 8 ohm installations
• Laminar Flow Port reduces distortion and improves frequency response Installation
• Vertically buried for easy installation Environmental • UV-resistant, low density polyethylene enclosure
• Robust construction to handle extreme conditions
• IP66 and MIL STD 810 rated

LS15T-SUB

Woofer	15" (381mm) polypropylene cone with a SantopreneTM rubber surround
Frequency Response	20Hz – 100Hz ±3dB
Sensitivity	94dB @ 1m, 2.83 V (8-ohms)
Recommended Amplifier Power (8 Ohms)	50W min, 500W max
Transformer Taps	70V: 300W, 150W, 75W; 100V: 300W, 150W; 8 Ohms
Crossover Frequency	100Hz
Enclosure Material	Low density polyethylene (LDPE)
Finish	Dark brown textured canopy
Overall Dimensions	21.26" x 33.58" (540mm x 853mm)
Woofer Enclosure Dims (H x Dia.)	23.01" x 16.73" (584mm x 425mm)
Canopy Dims (H x Dia.)	10.57" x 21.26" (268mm x 540mm)
Shipping Weight	83.77 lbs (38.0kg)

< Back to Index

In-Ground Subwoofer Range

SLS satellite speakers feature enhancements like the Sonance Laminated Core Transformer with an adjustable tap and large drivers and woofers making each component of the series powerful and flexible for system design and application.

HS12T-SUB

Aesthetics

• Designed to blend in with landscape surroundings
• Color-molded composite construction won't chip, peel or fade over time Performance
• Part of a scalable system that delivers perfectly even coverage and unequalled sonic performance throughout any space
• Polypropylene cone woofer with a Santoprene rubber surround for high excursion Sonance Laminated Core Transformer (SLCT) with an adjustable Tap for 300W, 150W, 75W, (38W 70V), and 8 ohm installations Installation
• Design to be hidden inside large planter pots or on hardscape surfaces Environmental
• Color-molded composite construction won't chip, peel or fade over time
• UV-resistant, low density polyethylene enclosure
• Robust construction to handle extreme conditions
• IP66 and MIL STD 810 rated

Woofer	12" (305mm) polypropylene cone with a SantopreneTM rubber surround
Frequency Response	22Hz – 100Hz ±3dB
Sensitivity	91dB @ 1m, 2.83 V (8-ohms)
Recommended Amplifier Power (8 Ohms)	50W min, 375W max
Transformer Taps	70V: 300W, 150W, 75W; 100V: 300W, 150W; 8 Ohms
Crossover Frequency	100Hz
Enclosure Material	Low density polyethylene (LDPE)
Finish	UV-resistant, low density polyethylene enclosure
Overall Dimensions	16.14" x 16.14" x 16.14"
Shipping Weight	64.14 lbs (30.0kg)

< Back to Index

Omnidirectional Outdoor Speaker

The Sonance OMNI-6T is an Omnidirectional 70V/100V/8 Ohm loudspeaker, designed to deliver 360-degree coverage in applications such as resort gardens, hotel pool areas, theme parks and outdoor shopping malls.

The OMNI-6T features a unique 2-way design, consisting of one high-excursion 6.5" woofer and four 1.25" wide band drivers, providing best-in-class frequency response.

The Sonance Laminated Core Transformer delivers un-compromised fidelity in 70V/100V.

The textured dark brown enclosure is designed to blend into ground cover, garden beds and foliage.

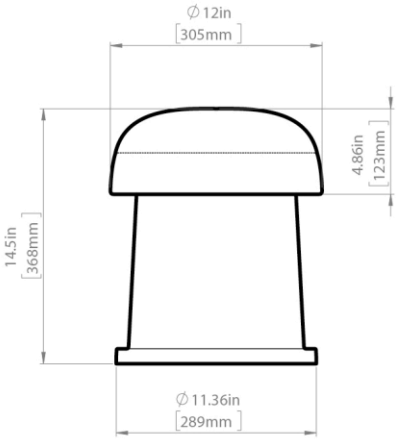

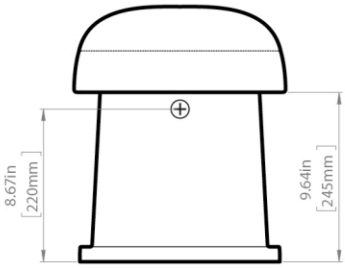

Frequency Range (-10dB)	38Hz – 25khz
Frequency Range (-3dB)	60Hz – 20kHz
Power Capacity	120 Watts Continuous Program Power, 60 Watts Continuous Pink Noise
Nominal Sensitivity	88 dB
Nominal Coverage Angle	360 degrees horizontal, 160 degrees vertical
Directivity Factor (Q)	2.2
Directivity (DI)	3.4dB
Rated Maximum SPL	107dB @ 1 meter (3.3 feet) average, 113dB peak
Rated Impedance	8 ohms nominal, 6 ohms minimum
Transformer Taps	80W, 40W, 20W and (10W @70V)
Crossover Point	500Hz
LF Driver	6.5" (165mm) Polypropylene Cone, Santoprene Rubber Surround
Wide Band Driver	Four 1.25" (32mm) EPDM dome, Ferrofluid cooled
Input Connectors	Flying Leads
Environmental	Conforms to Mil Spec 810 for humidity, salt spray, temperature and UV, IEC 529, IP-66 waterproof rating
Included Accessories	Silicone filled wire nuts
Overall Dimension HxDia	14.5”x 12" (368mm x 305mm)
Net Weight	14.60 lbs (6.62kg) each
Shipping Weight	23.25 lbs (10.55kg) each

< Back to Index

Invisible Series Speaker

Sonance award-winning Invisible Series Speakers are used exclusively in luxury retail boutiques around the world, including Louis Vuitton, Prada Fendi, Gucci and Miu Miu.

The 70/100 Volt or 8Ohm design combined with best-in-class sonic performance and most flexible installation processes makes them the perfect solution for projects requiring high quality audio combined with zero visual intrusion.

The world's best sounding invisible speakers

The IS4 C incorporates a polypropylene diaphragm that provides distinct woofer, midrange and tweeter radiation areas to ensure superior-quality sound in foreground music, public address and paging applications. The IS4C delivers sonic performance that is comparable to high-end traditional in-wall and in-ceiling speakers.

Wide dispersion

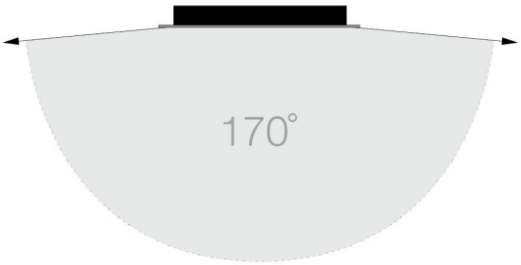

Sonance Invisible Series features best-in-class 170˚ dispersion, allowing larger areas to be covered with fewer speakers. This makes the IS4 C a more cost effective solution over larger projects, while also providing a seamless audio experience when transitioning from one space to another.

Purpose-built for commercial applications

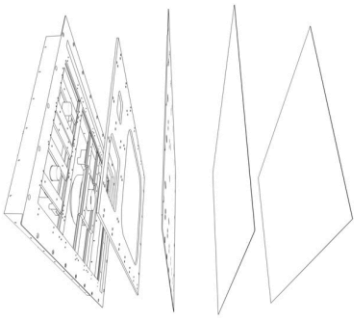

Sonance IS4 C Invisible Speaker was designed specifically for commercial applications. The integrated enclosure minimizes sound spill to adjoining rooms, while the selectable voltage taps adjust the volume at each speaker, ensuring the perfect level is achieved at every location.

< Back to Index

Sound not sight

The IS4 C delivers unbelievable sound quality that radiates from the wall or ceiling, without any visible signs of a speaker being on view. They are the perfect solution for retail boutiques, restaurants, galleries, museums or any space that requires exceptional sound quality without any visual distraction or compromising the design cues of the space.

Design, not distraction

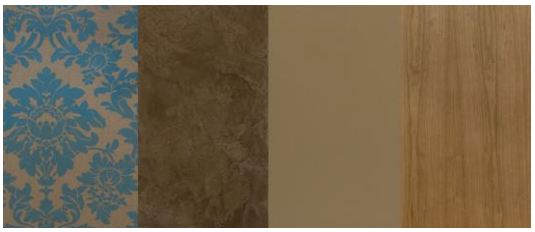

The Sonance IS4 C can be finished over with same material as the adjoining wall or ceiling surface, including regular drywall finishing compound and paint, wallpaper, wood veneer, or even venetian plaster. This feature allows Architects and Designers to specify a variety of different finishes throughout their projects without impacting the sound quality.

Used exclusively by many luxury brands

Sonance Invisible Series speakers are used exclusively world wide in many flagship luxury retail boutiques including; Louis Vuitton, Prada, Gucci, Miu Miu, Fendi and Dior! They provide seamless audio integration in environments where nothing must distract from the fine-tuned sensory experience the customer is totally immersed in.

Most versatile installation process

Sonance Invisible Series can be installed under up to 1/8” (3mm) of flexible material, without affecting the sound quality. This makes them the most versatile invisible speakers available while also ensuring they are compatible with varying finishing processes used around the world.

Selectable inputs

The IS4 C features a 70 or 100 Volt input selection as well as an 8-Ohm bypass, making it compatible with any industry standard commercial audio system. The IS4 C is transformer-coupled, with 32W, 16W, 8W, 4W, 2W, 1W, .5W taps and 8-ohm bypass that are selectable from the speaker’s enclosure.

< Back to Index

Invisible Series Speaker

IS6T 70V Speaker

Invisible Speakers are the pinnacle of the Sonance “Designed to Disappear” strategy. After a multi-year development process, the all-new Motion Flex Invisible Series line incorporates new breakthroughs in installation and audio quality, and firmly entrenches Sonance as the unrivaled leader in discreet performance audio. Sonance Invisible Series Speakers are perfect for luxury retail boutiques, hotels, and other high-end spaces that require best-in-class performance with zero visual intrusion.

Wave Flex Drive Unit	• 20 sq in (127 sq cm) bending wave diaphragm, 1.75” (44mm) voice coil
Frequency Response	• 98 sq in (633 sq cm) air pulse diaphragm, 6.5" (165mm) carbon fiber woofer
Nominal Air Flex Woofer	• 50Hz–30Hz (+/- 3dB)
Impedance	• 4 Ohm
Power Handling (RMS)	• 100W
Sensitivity (2.83V/1m)	• 84dB
Dispersion	• 170o hemispherical up to 10kHz
Transformer	• 30W with Sonance Laminated Core Technology
Transformer Taps	• Primary Taps (70V): 3.8W, 7.5W, 15W, 30W; Primary Taps (100V): 7.5W, 15W, 30W; 4 Ohm Bypass
Overload Protection	• Two Independent Self-Resetting Poly Switches, Safety AgencyUL-1480A, UL-2043, CSA-C22.2 No.205, NFPA-70, and NFPA-90A
Product Dimensions (WxHxD)	• 16.10” x 16.10” x 3.86” (409mm x 409mm x 98mm)
Mounting Depth	• 3.39” (86mm)

< Back to Index

DIMENSIONAL DRAWINGS

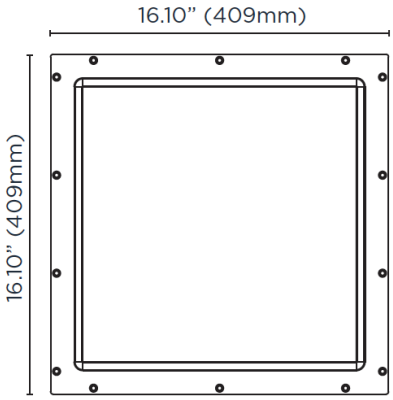

IS6T Back View

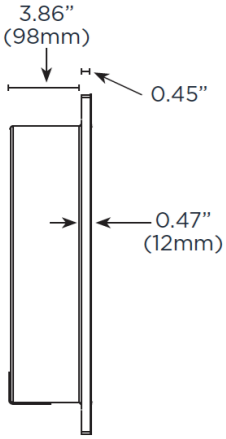

IS6T Side View

< Back to Index

Invisible Series Speaker

IS8T 70V Speaker

Invisible Speakers are the pinnacle of the Sonance "Designed to Disappear" strategy. After a multi-year development process, the all-new Motion Flex Invisible Series line incorporates new breakthroughs in installation and audio quality, and firmly entrenches Sonance as the unrivaled leader in discreet performance audio. Sonance Invisible Series Speakers are perfect for luxury retail boutiques, hotels, and other high-end spaces that require best-in-class performance with zero visual intrusion.

Wave Flex Drive Unit	• 29 sq in (188 sq cm) bending wave diaphragm, 1.75" (44mm) voice coil
Frequency Response	• 191 sq in (1234 sq cm) air pulse diaphragm, 8in (203mm) carbon fiber woofer
Nominal Air Flex Woofer	• 40Hz–30Hz (- 3dB)
Impedance	• 4 Ohm
Power Handling (RMS)	• 160W
Sensitivity (2.83V/1m)	• 86dB
Dispersion	• 170 degree hemispherical up to 10kHz
Transformer	• 60W with Sonance Laminated Core Technology
Transformer Taps	• Primary Taps (70V): 7.5W, 15W, 30W, 60W; Primary Taps (100V): 15W, 30W, 60W; 4 Ohm Bypass
Overload Protection	• Two Independent Self-Resetting Poly Switches, Safety AgencyUL-1480A, UL-2043, CSA-C22.2 No.205, NFPA-70, and NFPA-90A
Product Dimensions (WxHxD)	• 16.10" x 24.13" x 3.86" (409mm x 613mm x 98mm)
Mounting Depth	• 3.39" (86mm)

< Back to Index

Invisible Series Speaker

DIMENSIONAL DRAWINGS

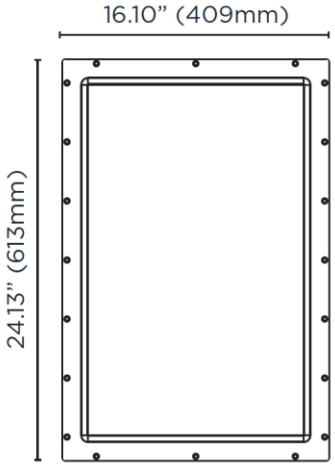

IS8T Back View

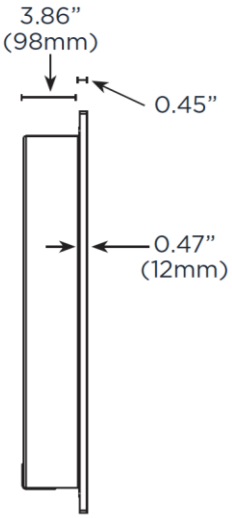

IS8T Side View

< Back to Index

Landscape Accessories

19" Ground Stake

Mounting and staking hardware options for Sonance Landscape Series.

9" Ground Stake

Mounting and staking hardware options for Sonance Landscape Series.

18” Premium Aluminium Stake

Mounting and staking hardware options for Sonance Landscape Series.

< Back to Index

Landscape Accessories

Surface Mount

Mounting and staking hardware options for Sonance Landscape Series.

Tree Mount

Mounting and staking hardware options for Sonance Landscape Series.

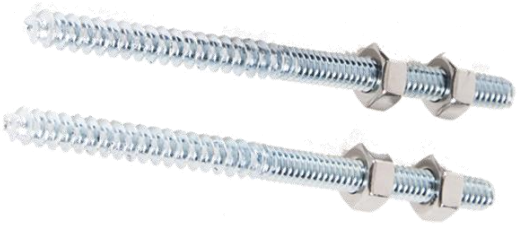

< Back to Index

Surface-Mount Range

Grilles

GRILLE PS-S43 BLACK (Pair)
The Sonance PS-S43 Grille is designed for Sonance PS-S43T speakers. It protects the speaker while enhancing the room's appearance with a clean, modern design. Made from quality materials, the grille fits perfectly, is easy to install using the included screws, and does not affect speaker performance.

GRILLE PS-S43 WHITE (Pair)
The Sonance PS-S43 Grille is designed for Sonance PS-S43T speakers. It protects the speaker while enhancing the room's appearance with a clean, modern design. Made from quality materials, it fits the speaker perfectly, is easy to install using the included screws, and does not affect performance.

GRILLE PS-S53 BLACK (Pair)
The Sonance PS-S53 Grille is designed for Sonance PS-S53T speakers, providing protection while enhancing the room's appearance. Made from high-quality materials, it features a modern design, fits securely, installs easily with included screws, and does not affect speaker performance.

GRILLE PS-S53 BLACK (Pair)
The Sonance PS-S53 Grille is designed for Sonance PS-S53T speakers, offering protection and a clean, modern look. Made from high-quality materials, it installs easily with included screws, fits securely, and does not affect speaker performance.

< Back to Index

Surface-Mount Range

Grilles

GRILLE PS-S63 BLACK (Pair)
The Sonance GRILLE PS-S63 Black is an official replacement grille for the Sonance PS-S63T surface-mount speaker, designed to match the original black finish and fit precisely.

GRILLE PS-S63 WHITE (Pair)
The Sonance GRILLE PS-S63 Black is an official replacement grille for the Sonance PS-S63T surface-mount speaker, designed to match the original black finish and fit precisely.

GRILLE PS-S83/S83 BLACK (Pair)
The Sonance GRILLE PS-S83/83 Black is an official replacement grille for PS-S83T and PS-S83WT speakers, featuring a black finish and a precise, direct-fit design.

GRILLE PS-S83/83 WHITE (Pair)
The Sonance GRILLE PS-S83/83 White is a replacement grille for PS-S83T and PS-S83WT speakers, designed for a precise fit and matching white finish.

SONANCE

BEYOND SOUND